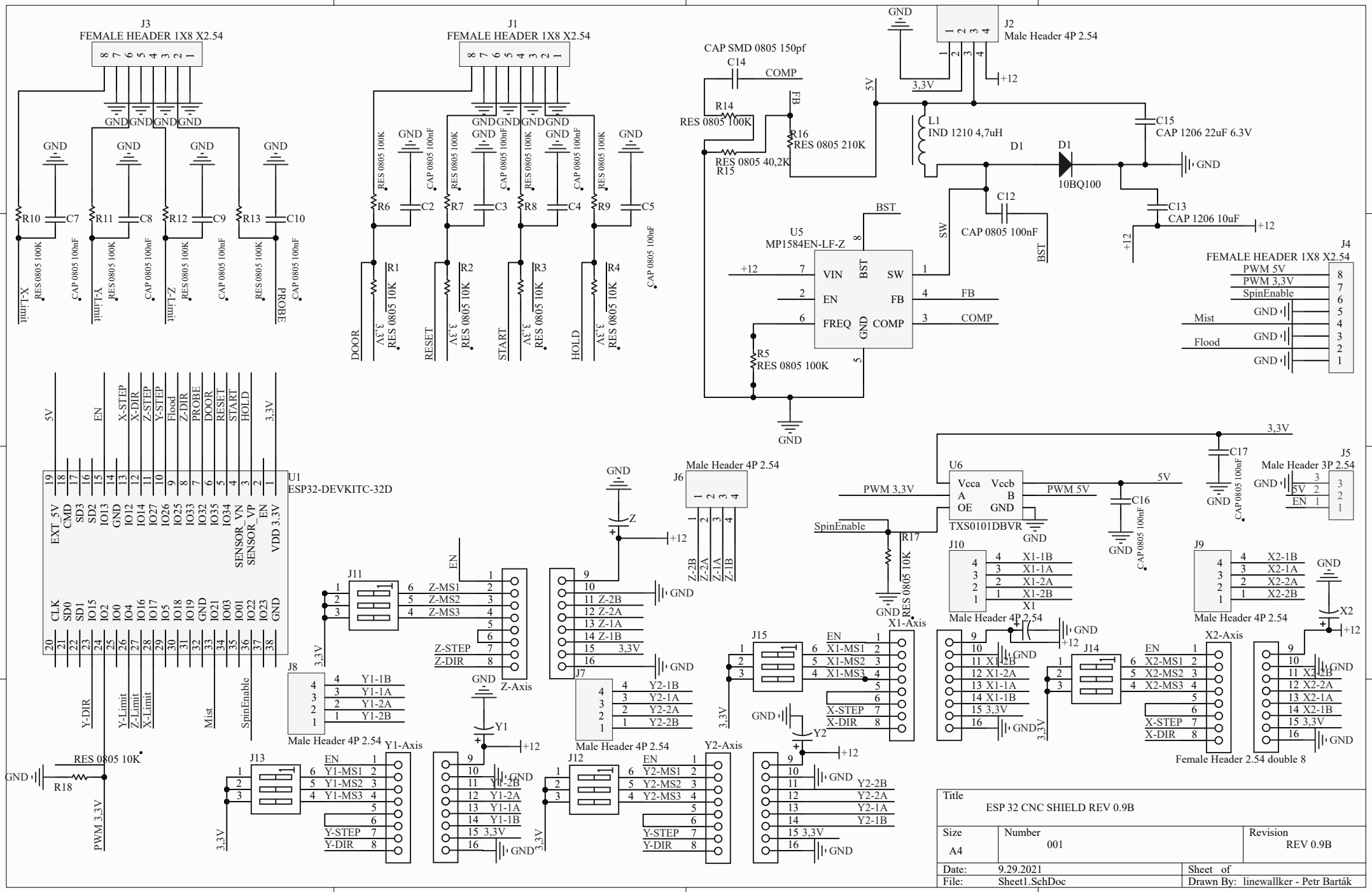
J3
FEMALE HEADER 1X8 X2.54
J1
FEMALE HEADER 1X8 X2.54
J2
Male Header 4P 2.54
CAP SMD 0805 150pf
C14
COMP
R14
RES 0805 100K
R15
RES 0805 40,2K
R16
RES 0805 210K
FB
L1
IND 1210 4,7uH
D1
10BQ100
C15
CAP 1206 22uF 6.3V
C12
CAP 0805 100nF
C13
CAP 1206 10uF
U5
MP1584EN-LF-Z
VIN
EN
FREQ
BST
SW
FB
COMP
GND
R5
RES 0805 100K
J4
FEMALE HEADER 1X8 X2.54
PWM 5V
PWM 3,3V
SpinEnable
Mist
Flood
U1
ESP32-DEVKITC-32D
J6
Male Header 4P 2.54
J8
Male Header 4P 2.54
J7
Male Header 4P 2.54
J11
Z-Axis
Y1-Axis
Y2-Axis
J13
J12
J15
X1-Axis
X2-Axis
J14
U6
TXS0101DBVR
Vcca
Vccb
A
B
OE
GND
PWM 3,3V
PWM 5V
SpinEnable
R17
RES 0805 10K
C16
C17
CAP 0805 100nF
J5
Male Header 3P 2.54
J10
Male Header 4P 2.54
J9
Male Header 4P 2.54
X1
X2
Female Header 2.54 double 8
R18
RES 0805 10K
PWM 3,3V
Title
ESP 32 CNC SHIELD REV 0.9B
Size
A4
Number
001
Revision
REV 0.9B
Date:
9.29.2021
Sheet of
File:
Sheet1.SchDoc
Drawn By:
linewallker - Petr Barták