Stopping Intruders

Using a Wireless Honeypot to Track Hackers

Presented by **Timber Wolfe**

The Hacker Academy

lonegray@gmail.com

www.HackerAcademy.com

How to protect networks with wireless devices (802.xx/Zigbee/etc…)

This presentation is about a specific implementation of a methodology. The point here is to promote thinking about how to use this kind of thinking to secure all types of wireless networks on all types of platforms. Once an attacker is on the LAN all of the egress point protections are averted.

romanHunter (**RO**uter hu**MAN Hunter**)

- romanHunter is a system requiring a Netgear **WG602Vx** wireless access point and a device that can run python scripts
- Will collect a set of MAC addresses for use as a data stream for MAC black listing
- Think outside of the box, this methodology can be applied to any wireless router

Reverse Engineering the Router (WG602v4 Screen Shots)

- Stations descriptions how this router works
  - No Stations Listed
  - Associations (wireless attempted connections)
  - Authorizations (wireless password accepted)
- HTTPScoop (Reverse Engineering the Conversation)
  - URLs of Interest
    - http://192.168.0.227/cgi-bin/stalist.html (where the MAC addresses come from)
    - http://192.168.0.227/cgi-bin/security.html (Where the security settings are performed)

WG602v4 Defaults and Notes

- Default IP: **http://192.168.0.227**
- Default Username: **admin**
- Default PW: **password**

No Stations Listed

NETGEAR settings

54 Mbps Wireless Access Point WG602v4

- Information

Setup
- IP Settings
- Wireless Settings
- Security Settings
- Access Control

Management
- Change Password
- Upgrade Firmware
- Restore Factory Default
- Station List
- Reboot AP

Advanced
- Wireless Settings
- Wireless Bridging

Web Support
- Knowledge Base
- Documentation

Logout

Station List

Station ID	MAC Address	Channel	Status
(There is no active connection)			

Refresh

Associations

NETGEAR settings

54 Mbps Wireless Access Point WG602v4

- Information

Setup
- IP Settings
- Wireless Settings
- Security Settings
- Access Control

Management
- Change Password
- Upgrade Firmware
- Restore Factory Default
- Station List
- Reboot AP

Advanced
- Wireless Settings
- Wireless Bridging

Web Support
- Knowledge Base
- Documentation

Station List

Station ID	MAC Address	Channel	Status
1	88:32:9B:7B:A2:D4	11	Associated

Refresh

Authorizations

NETGEAR settings

54 Mbps Wireless Access Point WG602v4

- Information

Setup
- IP Settings
- Wireless Settings
- Security Settings
- Access Control

Management
- Change Password
- Upgrade Firmware
- Restore Factory Default
- Station List
- Reboot AP

Advanced
- Wireless Settings
- Wireless Bridging

Web Support
- Knowledge Base
- Documentation

Logout

Station List

Station ID	MAC Address	Channel	Status
1	88:32:9B:7B:A2:D4	11	Authorized

Refresh

HTTPScoop Screenshots

Reverse engineering the router protocol with the client

Viewing the Existing Connections on the Router

HTTPScoop

Scoop | Clear | Follow | Scoop stopped | Thunderbolt Ethernet (en2)

Time	Method	Request URL	Content Type	Size (KB)	Status	Code
21:59:12:322	GET	http://192.168.0.227/cgi-bin/stalist.html	text/html	3.90	Done [0.000s]	200
21:59:12:816	GET	http://192.168.0.227/form.css	text/css	0	Done [0.001s]	304
21:59:12:817	GET	http://192.168.0.227/func.js	application/x-javascript	0	Done [0.000s]	304
21:59:12:818	GET	http://192.168.0.227/liteblue.gif	image/gif	0	Done [0.000s]	304
21:59:12:819	GET	http://192.168.0.227/h_stalist.html	text/html	0	Done [0.000s]	304
21:59:12:821	GET	http://192.168.0.227/form.css	text/css	0	Done [0.000s]	304

HTTP Request Detail

Summary | Headers | POST Hex | Response Text | Response Hex | Request/Response | Image | TCP/IP

```
    <td nowrap align="center"><b>Station ID</b> </td>
    <td nowrap align="center"><b>MAC Address</b></td>
    <td nowrap  align="center"><b>Channel</b></td>
    <td nowrap align="center"><b>Status</b></td>
      </tr>

<script language="javaScript">
var sta_list;
var assoc_list='';
var autho_list='';
if(autho_list.length < 17)
    sta_list = assoc_list;
else if(assoc_list.length < 17)
        sta_list = autho_list;
else
    sta_list = assoc_list + ' ' + autho_list;
var channel = '11';
var mactext = new Array();
var alltext = new Array();
var tmpmac = new Array();
```

An Association

- An association is an attempted connection that did not get authorized.
- The red arrow denotes the associated MAC address.

```
39        </ul>
40
41 <script language="javaScript">
42 var sta_list;
43 var assoc_list='assoclist 88:32:9B:7B:A2:D4';
44 var autho_list='';
45 if(autho_list.length < 17)
46     sta_list = assoc_list;
47 else if(assoc_list.length < 17)
48         sta_list = autho_list;
49 else
```

An Authorization

- An authorization is a MAC that will be displayed when that user has entered the correct password.
- The red arrow denotes the authorized MAC address.
- An authorized MAC is also associated.

```
<script language="javaScript">
var sta_list;
var assoc_list='assoclist 88:32:9B:7B:A2:D4';
var autho_list='autho_sta_list 88:32:9B:7B:A2:D4';
if(autho_list.length < 17)
    sta_list = assoc_list;
else if(assoc_list.length < 17)
        sta_list = autho_list;
else
```

An Authorization

- An authorization is a MAC that will be displayed when that user has entered the correct password.
- The red arrow denotes the authorized MAC address.
- An authorized MAC is also associated.

```
<script language="javaScript">
var sta_list;
var assoc_list='assoclist 88:32:9B:7B:A2:D4';
var autho_list='autho_sta_list 88:32:9B:7B:A2:D4';
if(autho_list.length < 17)
    sta_list = assoc_list;
else if(assoc_list.length < 17)
        sta_list = autho_list;
else
```

Changing the Wireless PW on the Router

- To change the PW on this router several variables must be submitted to the **wpas.html** page.
  - **setobject_secuirty_type=4**
  - **setobject_wpapskPhrase=**TheNewPassword
- If WEP is enabled the variables required must be scooped. This ONLY applies when WPA is in use.
- Also, keep in mind that realm security is used. Each page must include that realm token in each request for it to be accepted.

Roman Hunter Overview
File Structure

- romanHunterv3C.py (Python Script)
- romanHunterv3.txt (Logging File)
- pw_list.txt
  (File containing the list of passwords to use)

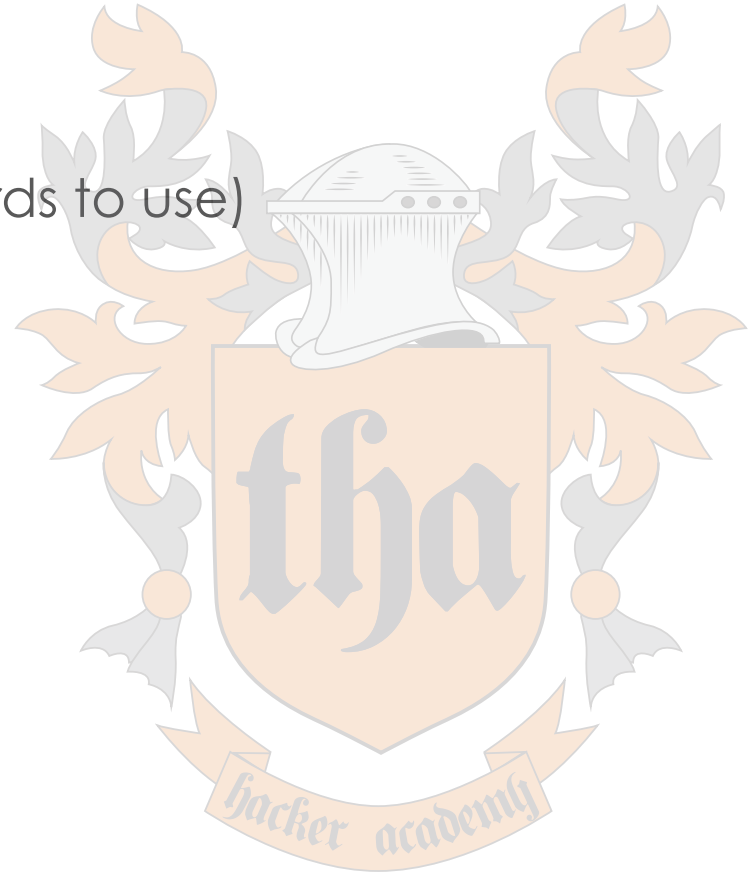

romanHunterv3.txt Sample

```
2013-10-21 19:46:59,549 ERROR found: A8:88:08:88:F9:20
2013-10-21 19:46:59,550 ERROR Changing pw from: donttrustgoats
 to: zebrahunter

2013-10-22 08:04:37,778 ERROR Error 100, could not open URL
2013-10-31 17:04:18,146 ERROR found: 88:32:9B:7B:A2:D4
2013-10-31 17:04:18,152 ERROR Changing pw from: zebrahunter
 to: goatsrevil

2013-10-31 17:04:42,225 ERROR found: 88:32:9B:7B:A2:D4
2013-10-31 17:04:42,226 ERROR Changing pw from: goatsrevil
 to: willcthese

2013-10-31 19:07:59,070 ERROR found: 24:77:03:BD:33:80
2013-10-31 19:07:59,077 ERROR Changing pw from: willcthese
 to: wantthatmac!

2013-11-09 09:53:54,209 ERROR found: 88:32:9B:7B:A2:D4
2013-11-09 09:53:54,215 ERROR Changing pw from: wantthatmac!
 to: easyeasy1

2013-11-09 09:58:35,937 ERROR found: 88:32:9B:7B:A2:D4
2013-11-09 09:58:35,938 ERROR Changing pw from: easyeasy1
 to: easyeasy2
```

pw_list.txt Sample

```
1 zebrahunter
2 goatsrevil
3 willcthese
4 wantthatmac!
5 easyeasy1
6 easyeasy2
7 beesscareme
8 donttrustgoats
```

romanHunter Screen Shots

The following screenshots illustrate the romanHunter in action.

Idle, illustrating the heartbeat signal

- Note the dots, they illustrate the heartbeat signal. This denotes the scripts is running and is not monitoring any activity.
- It is critical to know the Python script monitoring one or more honeypots is not locked up.

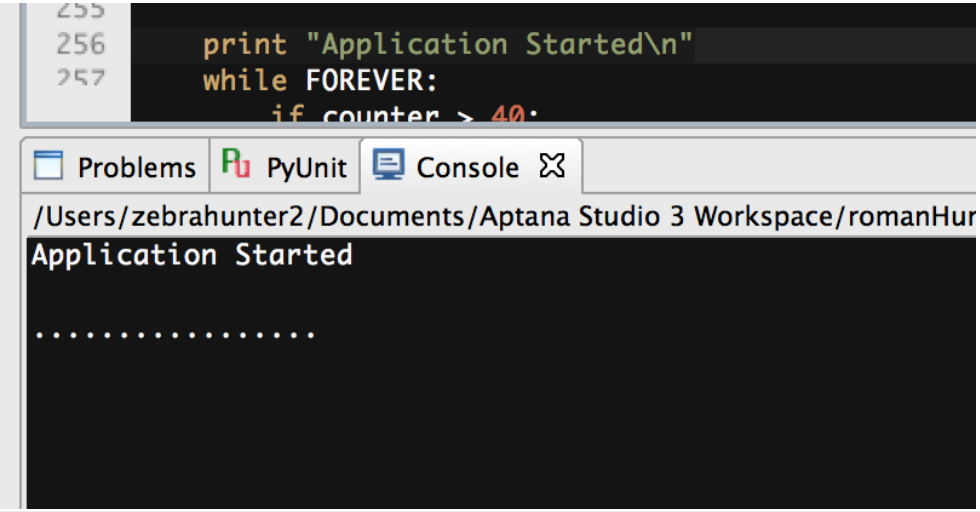

The Output of an Association

- The following output is what would be produced when an association is seen by the script.
- Associations denote 'attempted' connections, if they are also not authorized.

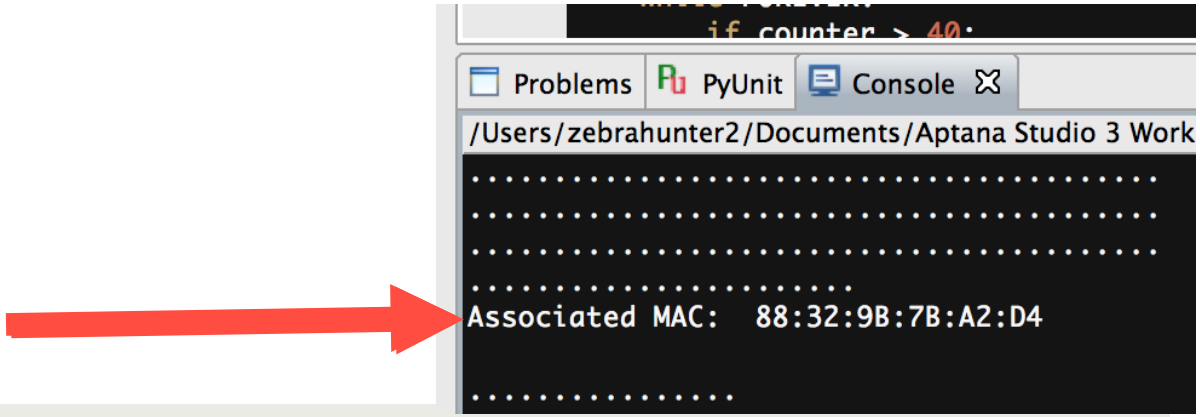

The Output of an Authorization

- Note the line that says 'Hacker MAC'. That is the MAC address of the machine we are after.
- THIS MAC address is the point of this exercise. This information can then be used to block the hackers attempts to access nearby networks and alert CERT/CIRT members. The MAC could also be used to direct the attacker to a honeypot.

```
.................................
Associated MAC:  88:32:9B:7B:A2:D4

Hacker MAC:  88:32:9B:7B:A2:D4

........
Associated MAC:  88:32:9B:7B:A2:D4
```

Basic Script Logic

- Run Main()
- Call check4ConnectionsR()
- Call changePassword() (if applicable)
- Call generateNewWIFIPW() (if applicable)

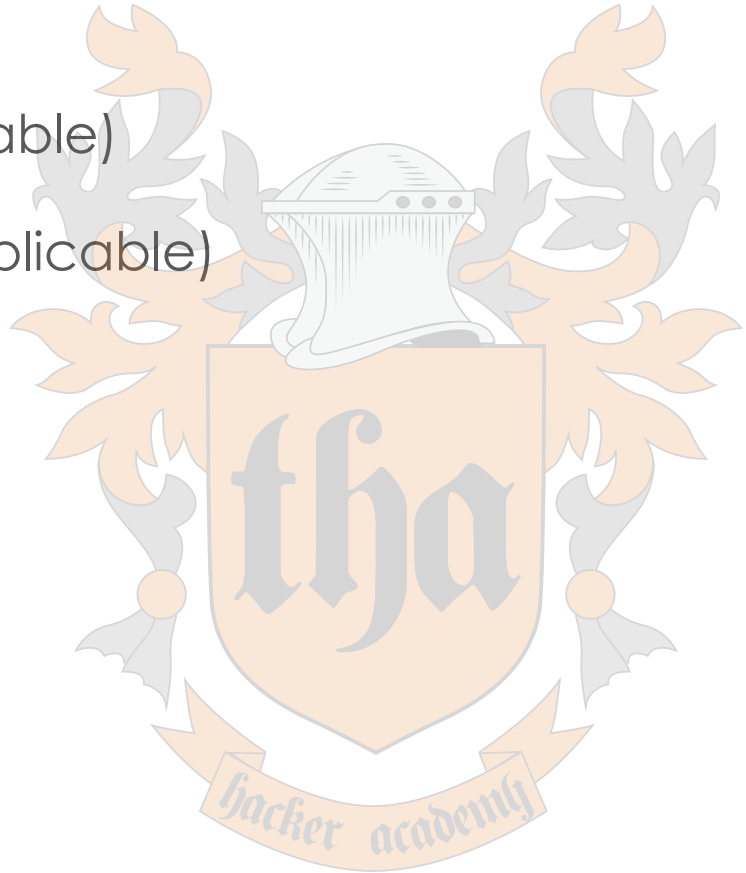

Caveats for a Working Environment

- If you are using WEP Security:
  - There does not need to be any additional configuration or connections
- If you are using WPA or anything other than WEP:
  - A device of any kind MUST be connected to the access point, once its in production. This is required for the attacker to disconnect.

Roman Hunter Screen Shots

- Stations descriptions how this router works
  - No Stations Listed
  - Associations (wireless attempted connections)
  - Authorizations (wireless password accepted)
- Python scripts in action
- Heartbeat signal the **romanHunter** produces

Implementations

- Wireless Mesh
- Adjacent AP to a corporate network
- Standalone AP (pen tests, testing for future office location)
- Can be used with WEP for faster hacker identification (15 minutes to compromise)
- Can be used to illustrate time to compromise with current PW implementations and infrastructure configurations as well as the distance the AP reaches, with zero impact on the customer network(s)

Mesh Implementation

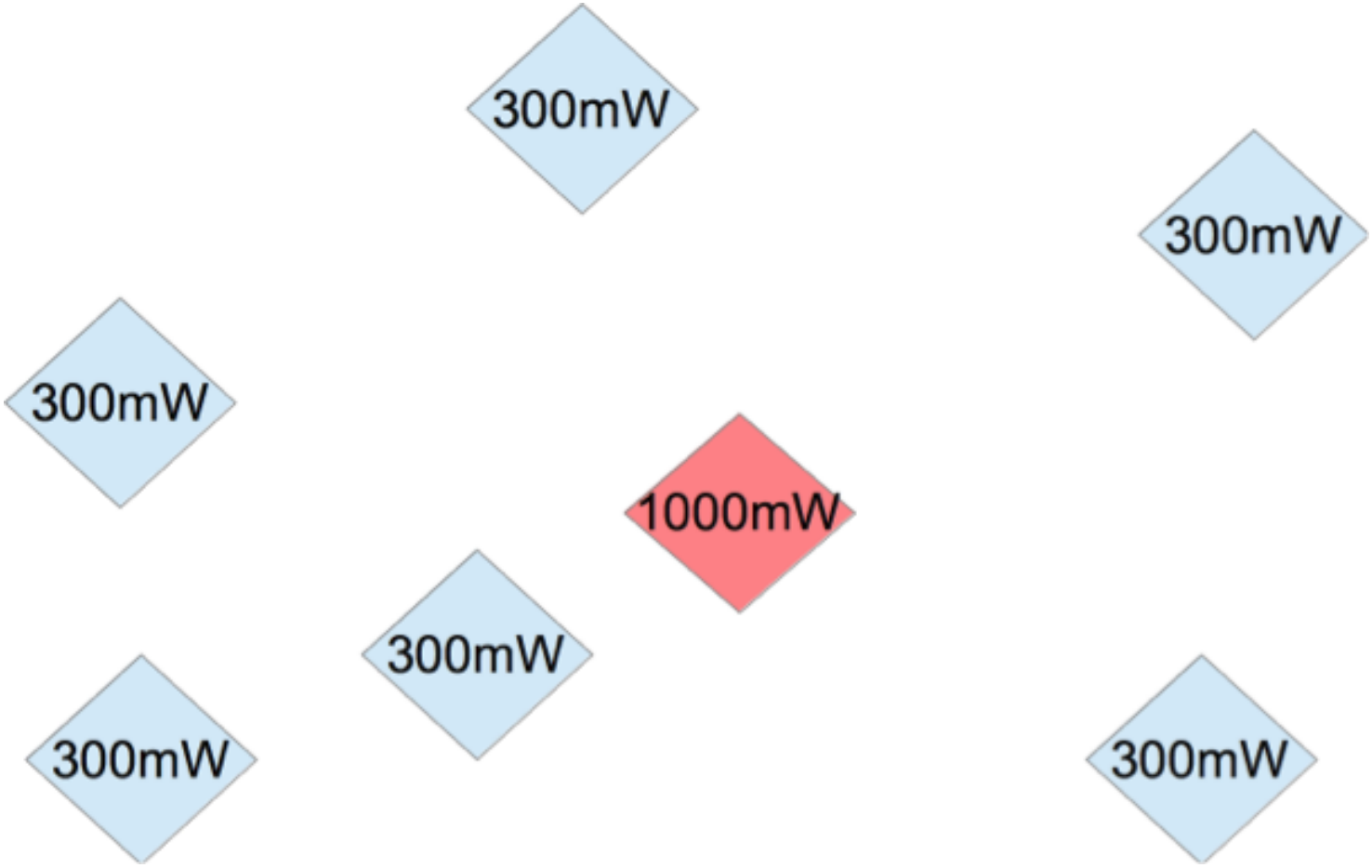

Typical Deployment

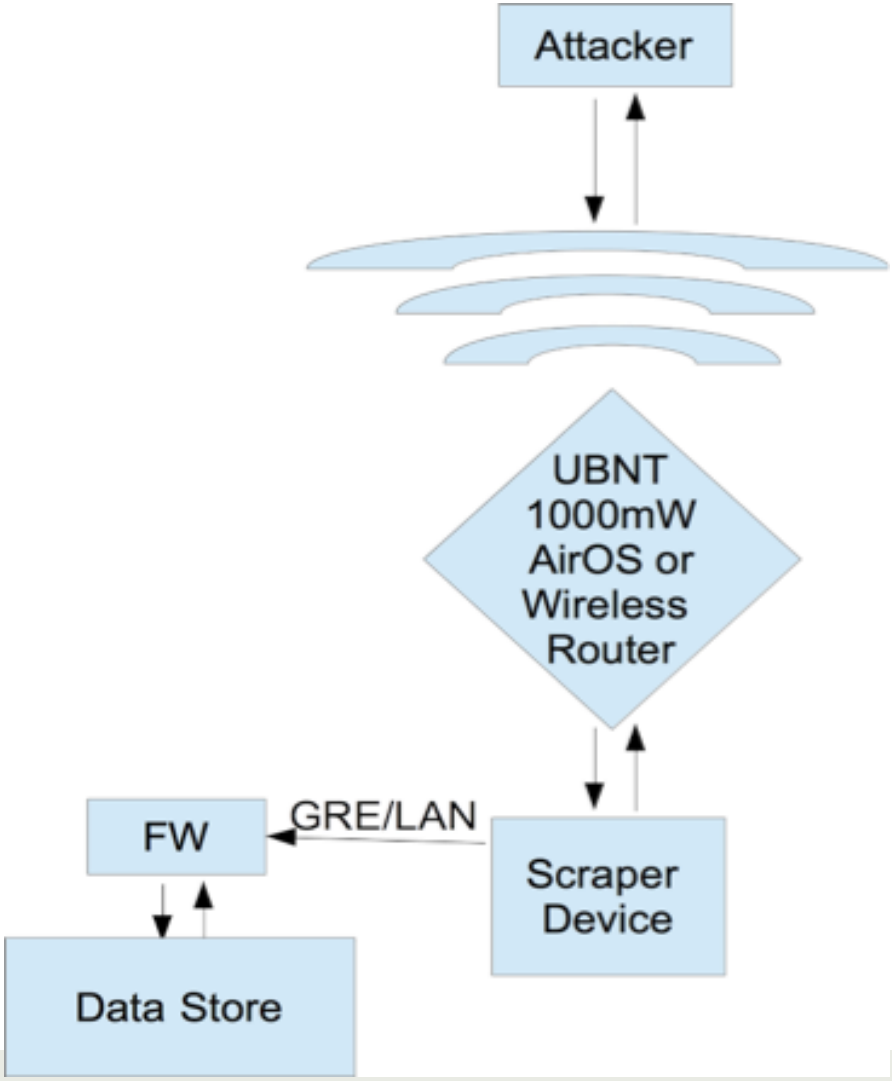

Python Script Review

- Functionalized
- Limitations
  - Not enough error checking
  - Should include more abstraction for functionality that does not change between different router versions and types
  - Should include database functionality for storing the MAC addresses
  - Should include a function for uploading to a central repository of MAC's found

Tools Used During Development

- OS X Laptop
- HTTPScoop (Fiddler2 on Windows)
- VM Ware (Fusion 5)
- Windows 7 VM (initial setup of AP)
- Python (for scripting)
  (Can use any scripting language)
- Cell phone with wireless to simulate attacker

Tools Used

- HTTPScoop HTTP Protocol Analyzer.
  - High Level protocol analyzer usage is easier to comprehend and find instructions versus something like wireshark.
  - OS X (can use: fiddler2 for Windows)

Other Tools for Extending romanHunter

- Scapy (protocol dissector and manipulator)
- MySQL
- Wireshark

Questions or Comments?

Contact Timber Wolfe

lonegray@gmail.com

www.HackerAcademy.com