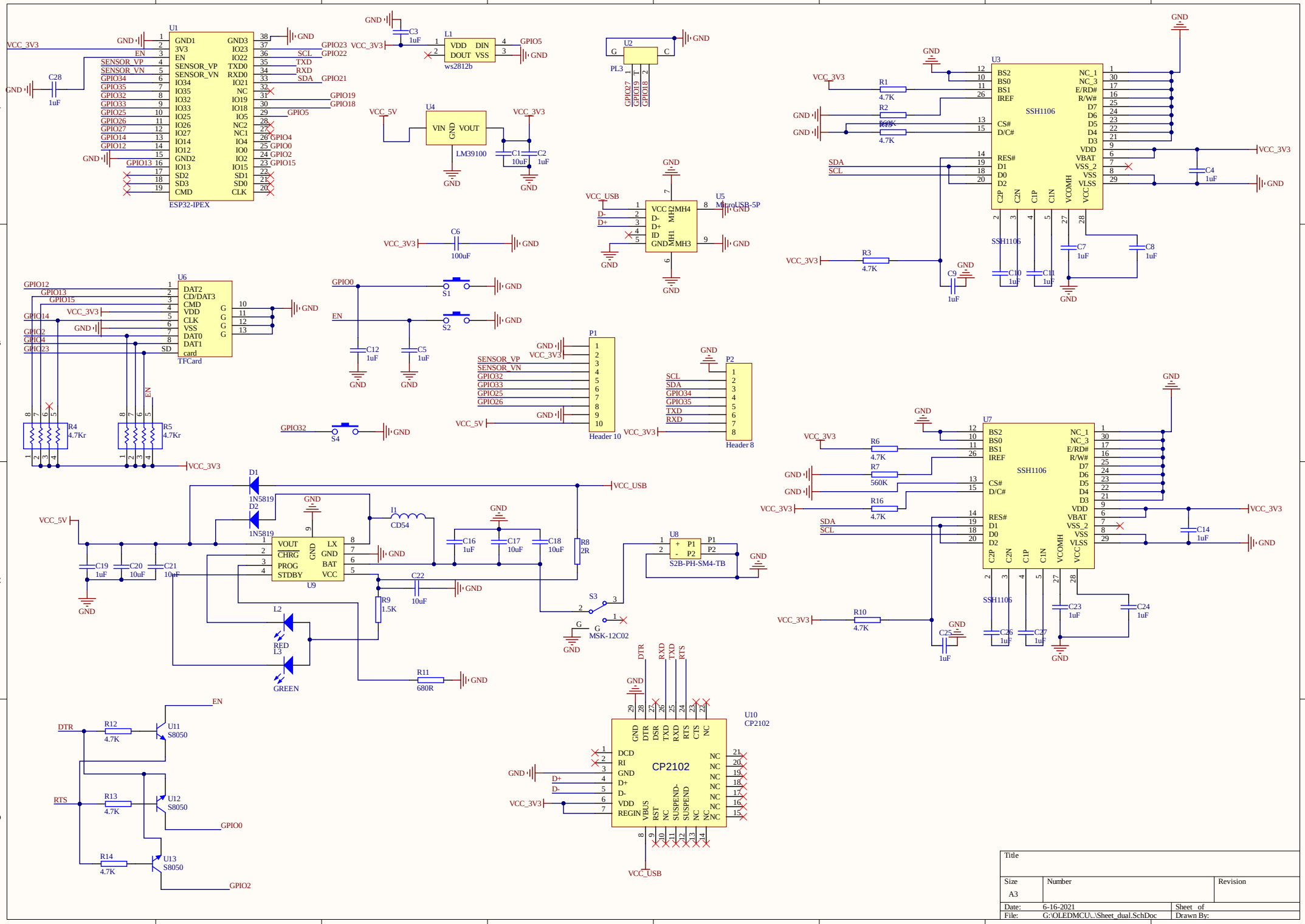
U1
ESP32-IPEX
GND1 3V3 EN SENSOR_VP SENSOR_VN IO34 IO35 IO32 IO33 IO25 IO26 IO27 IO14 IO12 GND2 IO13 SD2 SD3 CMD
GND3 IO23 IO22 TXD0 RXD0 IO21 NC IO19 IO18 IO5 NC2 NC1 IO4 IO0 IO2 IO15 SD1 SD0 CLK
VCC_3V3
C28 1uF
C3 1uF
L1
VDD DIN DOUT VSS
ws2812b
GPIO5
U4
VIN GND VOUT
LM39100
VCC_5V
C1 10uF
C2 1uF
C6 100uF
U2
PL3
GPIO27 GPIO19 GPIO18
U5
MicroUSB-5P
VCC D- D+ ID GND MH1 MH2 MH3 MH4
VCC_USB
U3
SSH1106
BS2 BS0 BS1 IREF CS# D/C# RES# D1 D0 D2 C2P C2N C1P C1N VCOMH VCC NC_1 NC_3 E/RD# R/W# D7 D6 D5 D4 D3 VDD VBAT VSS_2 VSS VLSS
R1 4.7K
R2 560K
R3 4.7K
C4 1uF
C7 1uF
C8 1uF
C9 1uF
C10 1uF
C11 1uF
SDA
SCL
U6
TFCard
DAT2 CD/DAT3 CMD VDD CLK VSS DAT0 DAT1 card
GPIO12 GPIO13 GPIO15 GPIO14 GPIO2 GPIO4 GPIO23
R4 4.7Kr
R5 4.7Kr
EN
S1
S2
S4
C12 1uF
C5 1uF
P1
Header 10
SENSOR_VP SENSOR_VN GPIO32 GPIO33 GPIO25 GPIO26
P2
Header 8
SCL SDA GPIO34 GPIO35 TXD RXD
U7
R6 4.7K
R7 560K
R16 4.7K
R10 4.7K
C14 1uF
C23 1uF
C24 1uF
C25 1uF
C26 1uF
C27 1uF
D1 1N5819
D2 1N5819
VCC_USB
VCC_5V
C19 1uF
C20 10uF
C21 10uF
U9
VOUT CHRG PROG STDBY GND LX GND BAT VCC
L1 CD54
C16 1uF
C17 10uF
C18 10uF
R8 2R
C22 10uF
R9 1.5K
L2 RED
L3 GREEN
R11 680R
U8
S2B-PH-SM4-TB
S3
MSK-12C02
U11 S8050
U12 S8050
U13 S8050
R12 4.7K
R13 4.7K
R14 4.7K
DTR
RTS
GPIO0
GPIO2
U10
CP2102
DCD RI GND D+ D- VDD REGIN VBUS RST NC SUSPEND- SUSPEND NC NC NC NC NC NC NC NC
GND DTR DSR TXD RXD RTS CTS NC
RXD TXD
Title
Size A3
Number
Revision
Date: 6-16-2021
File: G:\OLEDMCU\..\Sheet_dual.SchDoc
Sheet of
Drawn By: