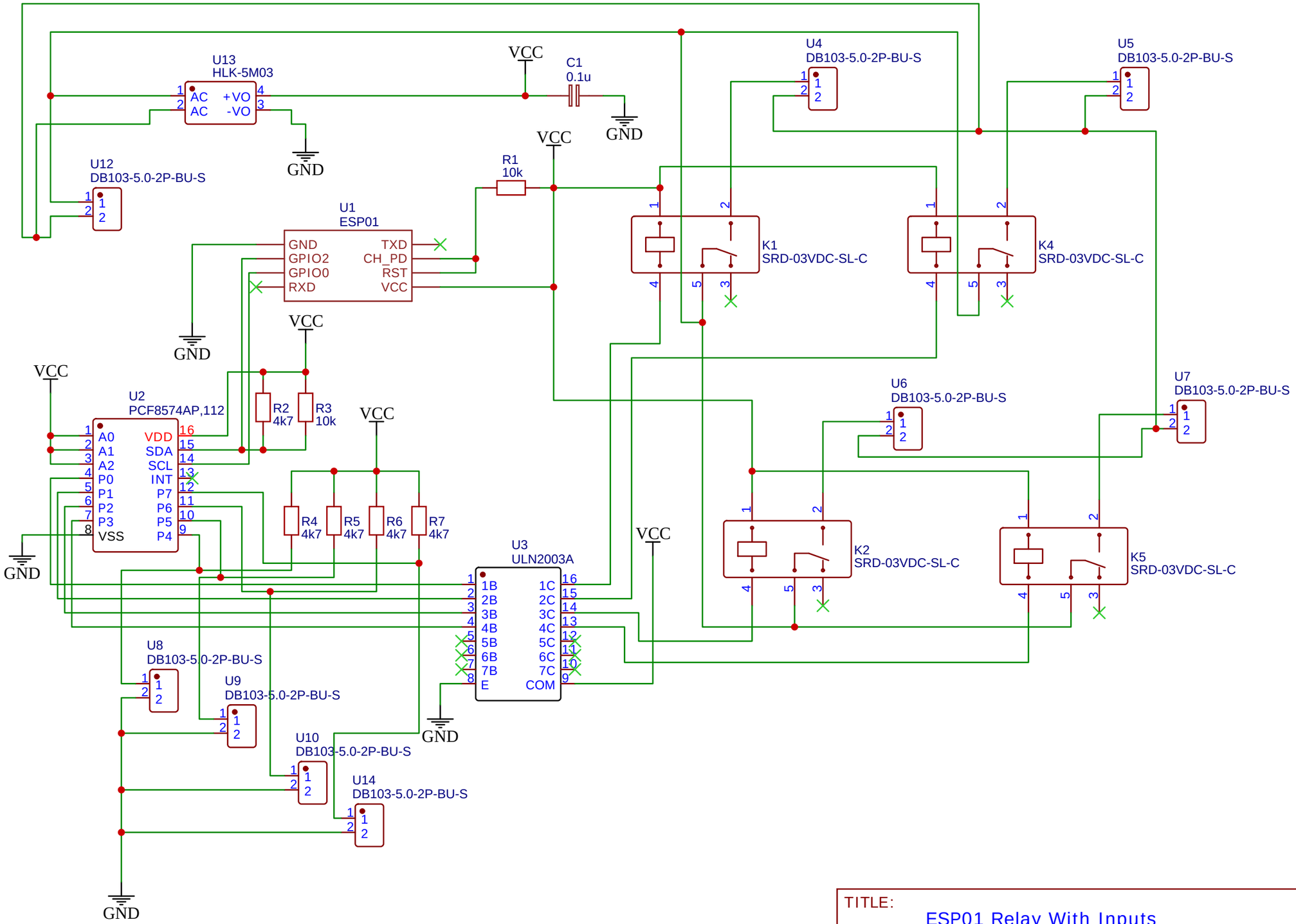

TITLE: ESP01 Relay With Inputs		REV: 1.0
嘉立创EDA	Company: Your Company	Sheet: 1/1
	Date: 2023-01-11 Drawn By: lucasiv	