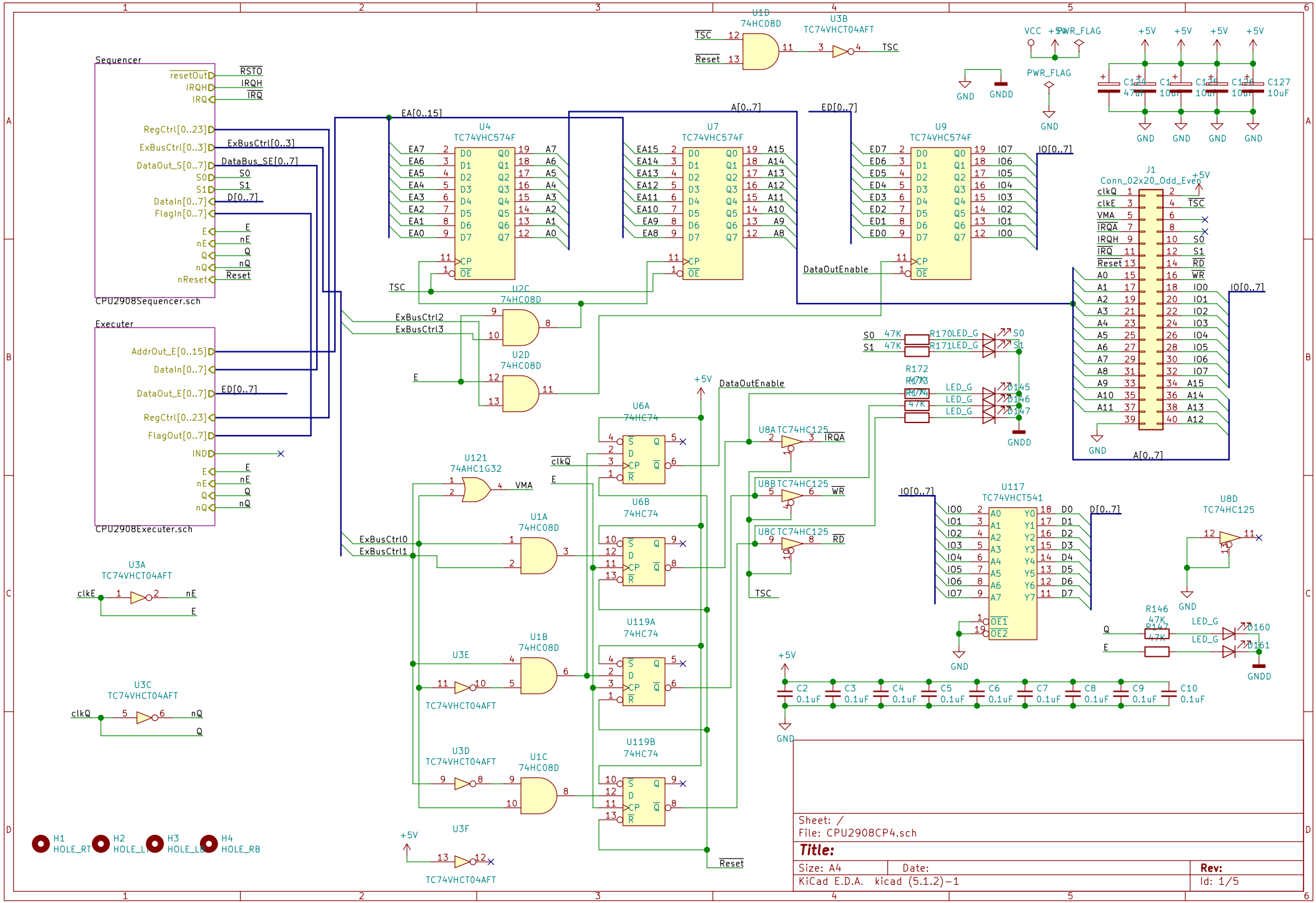
Sequencer
resetOut
IRQH
IRQ
RegCtrl[0..23]
ExBusCtrl[0..3]
DataOut_S[0..7]
S0
S1
DataIn[0..7]
FlagIn[0..7]
E
nE
Q
nQ
nReset
RSTO
ExBusCtrl[0..3]
DataBus_SE[0..7]
D[0..7]
CPU2908Sequencer.sch
Executer
AddrOut_E[0..15]
DataIn[0..7]
DataOut_E[0..7]
RegCtrl[0..23]
FlagOut[0..7]
IND
ED[0..7]
CPU2908Executer.sch
U1D
74HC08D
U3B
TC74VHCT04AFT
TSC
Reset
VCC
PWR_FLAG
GND
GNDD
+5V
C124
47uF
C125
10uF
C126
10uF
C127
10uF
EA[0..15]
A[0..7]
ED[0..7]
U4
TC74VHC574F
U7
TC74VHC574F
U9
TC74VHC574F
IO[0..7]
DataOutEnable
J1
Conn_02x20_Odd_Even
clkQ
clkE
VMA
IRQA
IRQH
IRQ
Reset
A0
A1
A2
A3
A4
A5
A6
A7
A8
A9
A10
A11
A12
A13
A14
A15
RD
WR
U2C
74HC08D
U2D
74HC08D
ExBusCtrl2
ExBusCtrl3
E
R170
R171
LED_G
D145
D146
D147
R172
R173
R174
47K
U8A
TC74HC125
U8B
TC74HC125
U8C
TC74HC125
U6A
74HC74
U6B
74HC74
U119A
74HC74
U119B
74HC74
U121
74AHC1G32
U1A
74HC08D
U1B
74HC08D
U1C
74HC08D
U3E
TC74VHCT04AFT
U3D
TC74VHCT04AFT
U3F
TC74VHCT04AFT
U3A
TC74VHCT04AFT
U3C
TC74VHCT04AFT
U117
TC74VHCT541
D[0..7]
U8D
TC74HC125
R146
R147
D160
D161
C2
C3
C4
C5
C6
C7
C8
C9
C10
0.1uF
H1
HOLE_RT
H2
HOLE_LT
H3
HOLE_LB
H4
HOLE_RB
Sheet: /
File: CPU2908CP4.sch
Title:
Size: A4
Date:
Rev:
KiCad E.D.A. kicad (5.1.2)-1
Id: 1/5

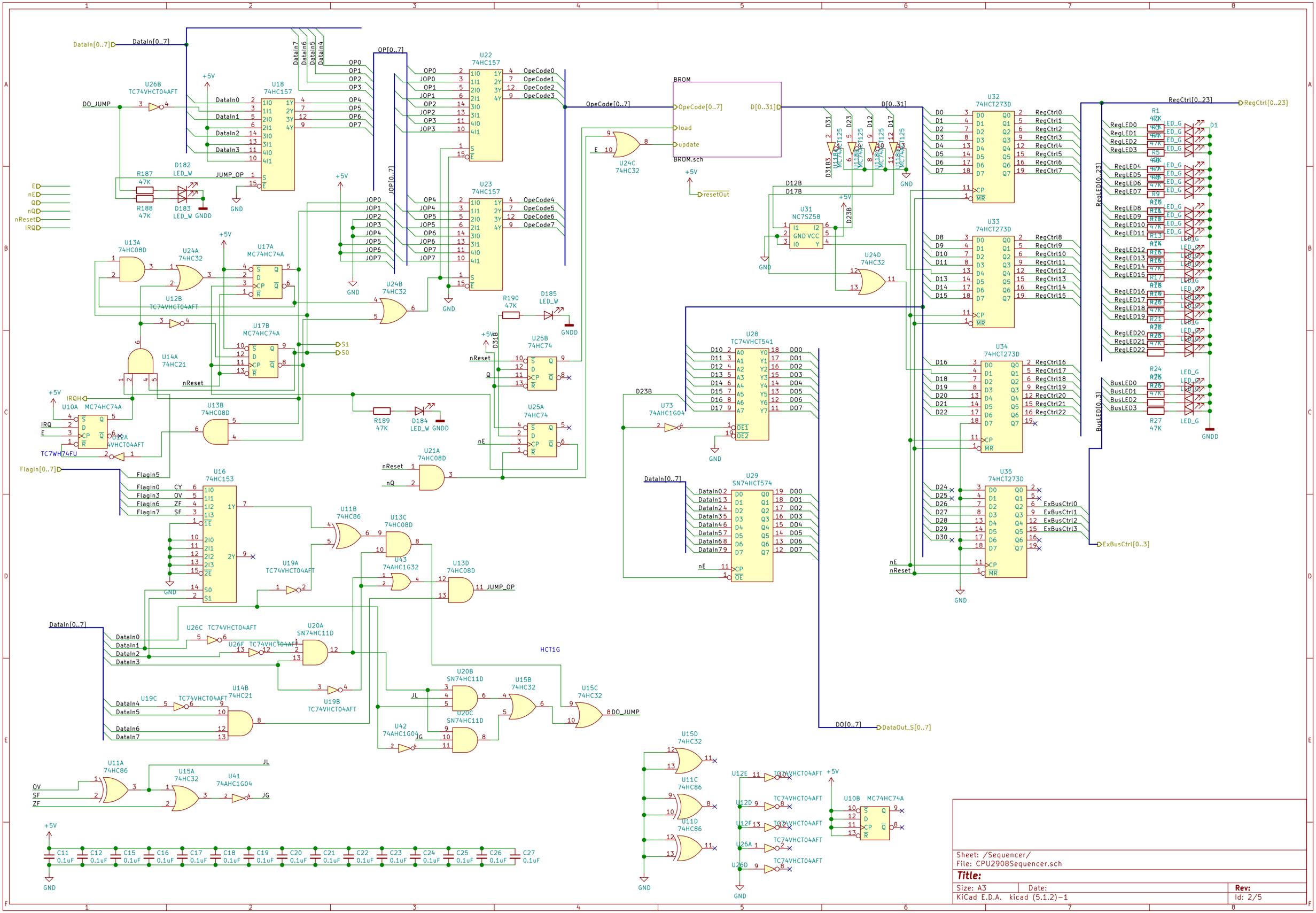

Sheet: /Sequencer/
File: CPU2908Sequencer.sch

Title:

Size: A3	Date:	Rev:
KiCad E.D.A. kicad (5.1.2)-1		Id: 2/5

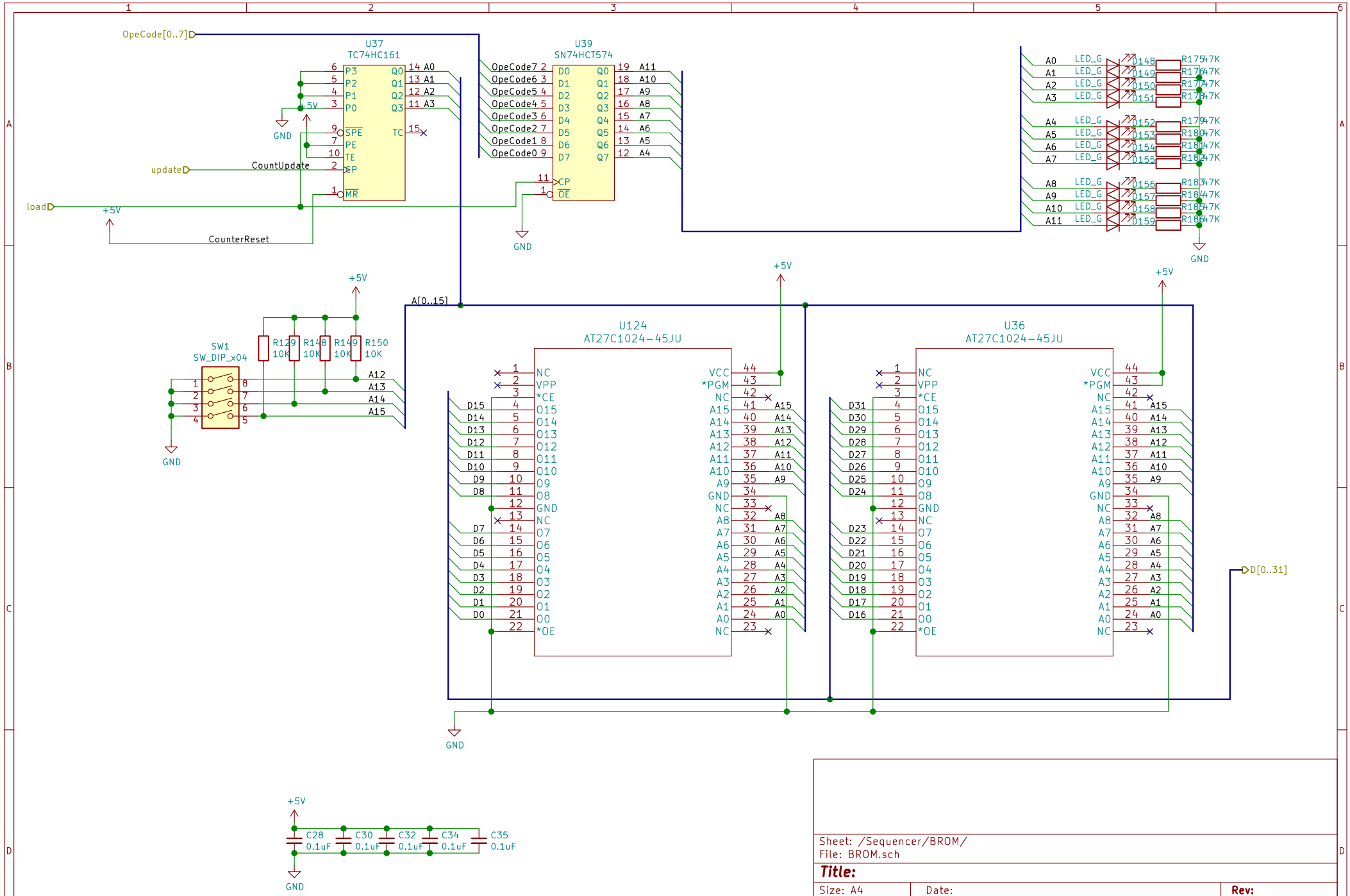

Sheet: /Sequencer/BROM/
File: BROM.sch

Title:

Size: A4	Date:	Rev:
KiCad E.D.A. kicad (5.1.2)-1		Id: 3/5

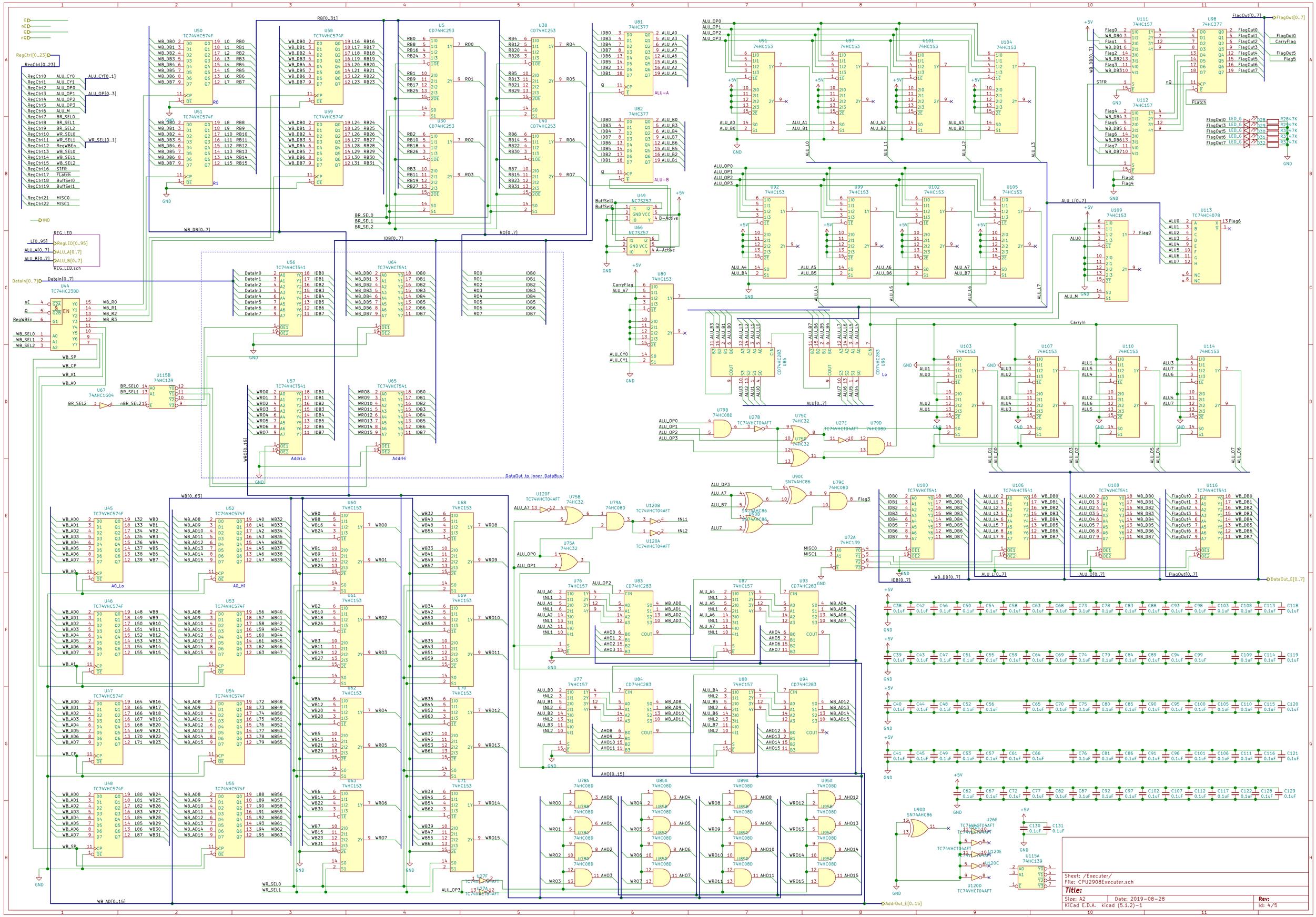
U50 TC74VHC574F
U51 TC74VHC574F
U58 TC74VHC574F
U59 TC74VHC574F
U5 CD74HC253
U30 CD74HC253
U38 CD74HC253
U40 CD74HC253
U81 74HC377
U82 74HC377
U49 NC7SZ57
U66 NC7SZ57
U44 TC74VHCT238D
U56 TC74VHCT541
U64 TC74VHCT541
U57 TC74VHCT541
U65 TC74VHCT541
U115B 74HC139
U67 74HC1G04
U80 74HC153
U91 74HC153
U97 74HC153
U101 74HC153
U104 74HC153
U92 74HC153
U99 74HC153
U102 74HC153
U105 74HC153
U111 74HC157
U112 74HC157
U98 74HC377
U109 74HC153
U113 TC74HC4078
U103 74HC153
U107 74HC153
U110 74HC153
U114 74HC153
U79B 74HC08D
U27B TC74VHCT04AFT
U75C 74HC32
U75B 74HC32
U27E TC74VHCT04AFT
U79D 74HC08D
U90C SN74AHC86
U79C 74HC08D
U90B SN74AHC86
U72A 74HC139
U120F TC74VHCT04AFT
U75B 74HC32
U79A 74HC08D
U120B TC74VHCT04AFT
U120A TC74VHCT04AFT
U75A 74HC32
U45 TC74VHC574F
U52 TC74VHC574F
U60 74HC153
U68 74HC153
U46 TC74VHC574F
U53 TC74VHC574F
U61 74HC153
U69 74HC153
U47 TC74VHC574F
U54 TC74VHC574F
U62 74HC153
U70 74HC153
U48 TC74VHC574F
U55 TC74VHC574F
U63 74HC153
U71 74HC153
U27F TC74VHCT04AFT
U76 74HC157
U83 CD74HC283
U87 74HC157
U93 CD74HC283
U77 74HC157
U84 CD74HC283
U88 74HC157
U94 CD74HC283
U78A 74HC08D
U85A 74HC08D
U89A 74HC08D
U95A 74HC08D
U100 TC74VHCT541
U106 TC74VHCT541
U108 TC74VHCT541
U116 TC74VHCT541
U90D SN74AHC86
U26E TC74VHCT04AFT
U120E TC74VHCT04AFT
U120C TC74VHCT04AFT
U120D TC74VHCT04AFT
U115A 74HC139
DataOut to Inner DataBus
DataOut_E[0..7]
AddrOut_E[0..15]
Sheet: /Executer/
File: CPU2908Executer.sch
Title:
Size: A2
Date: 2019-08-28
KiCad E.D.A. kicad (5.1.2)-1
Rev:
Id: 4/5

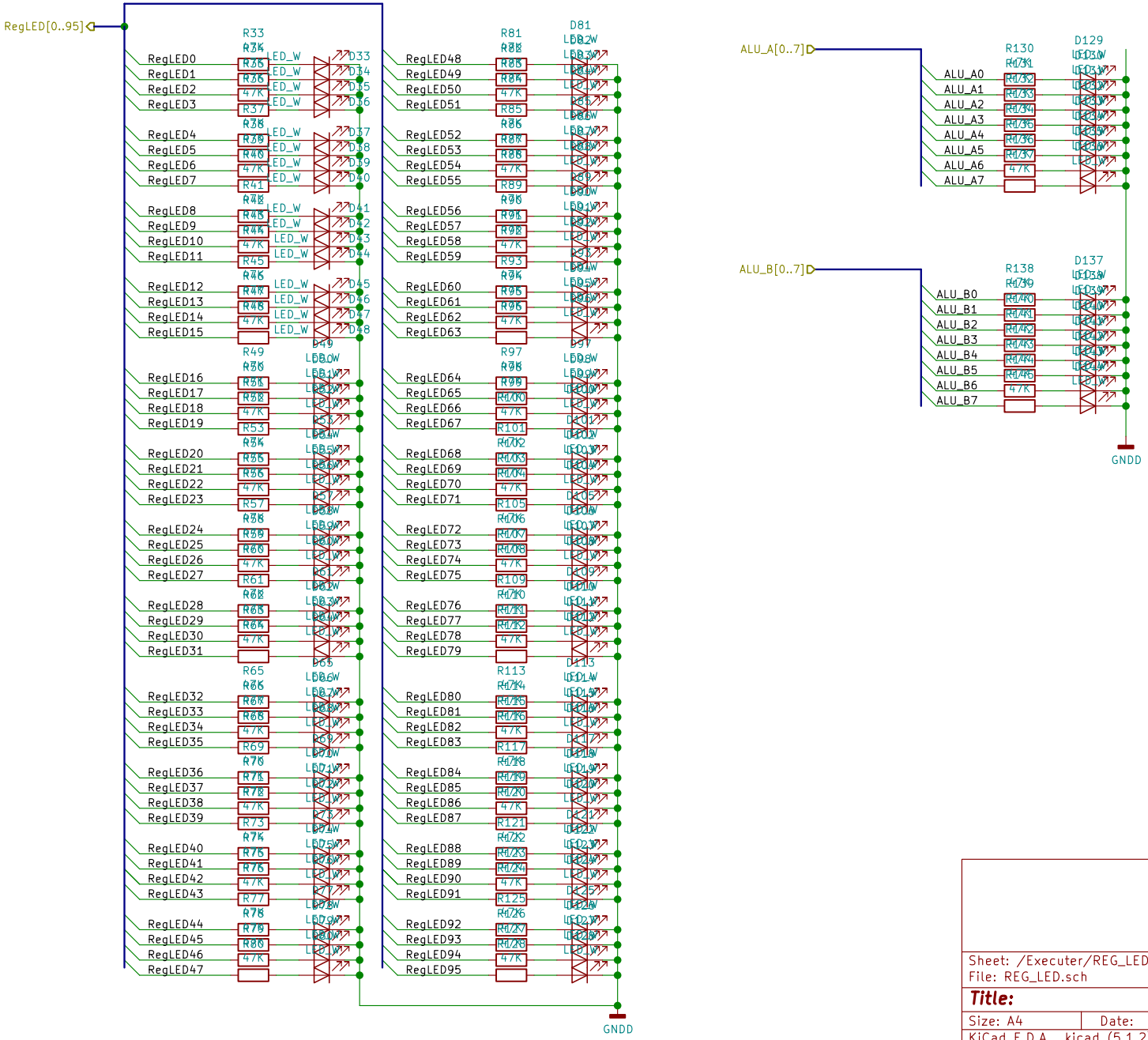

Sheet: /Executer/REG_LED/
File: REG_LED.sch

Title:

Size: A4	Date:	Rev:
KiCad E.D.A. kicad (5.1.2)-1		Id: 5/5