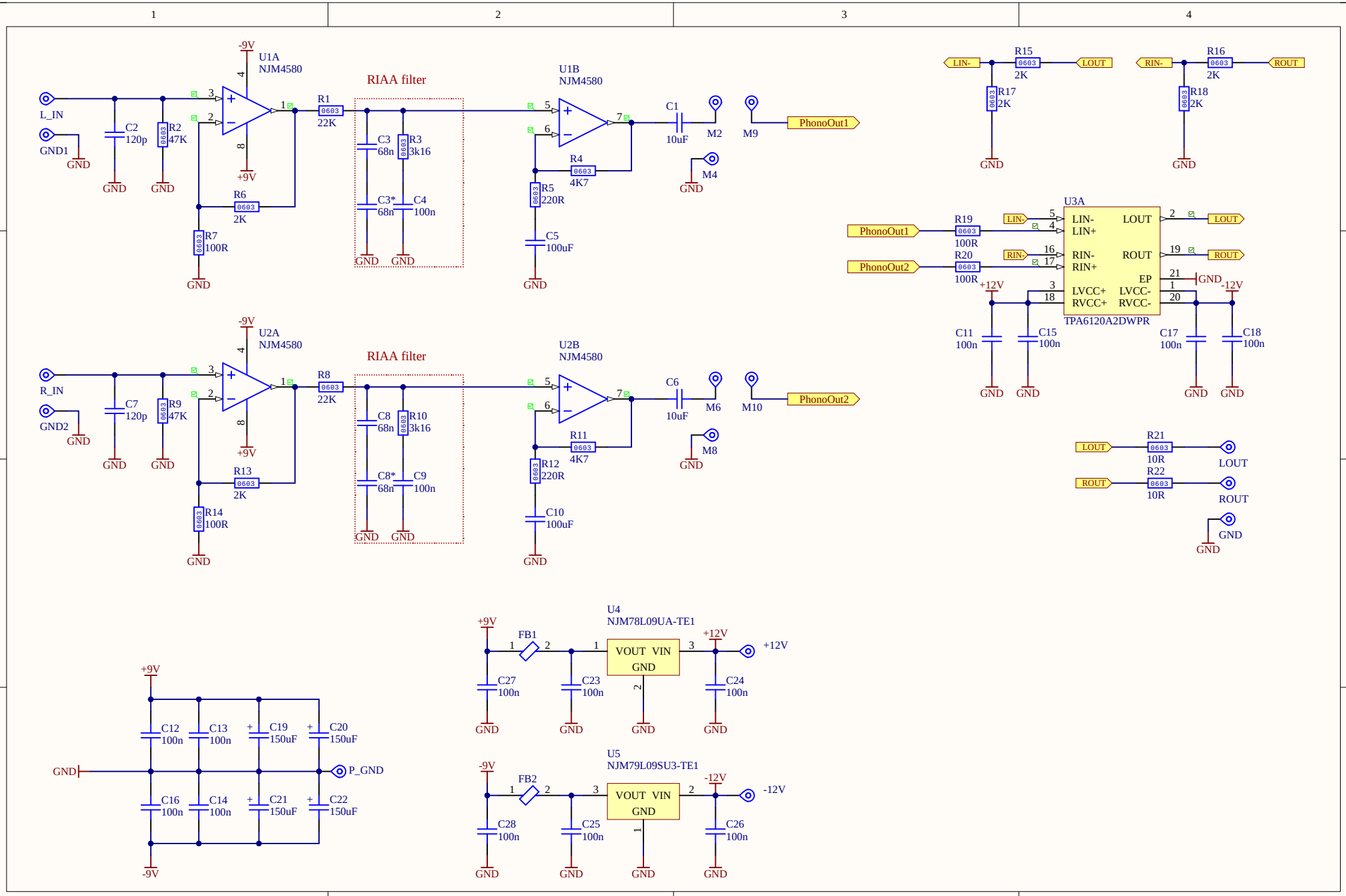
U1A
NJM4580
-9V
+9V
L_IN
GND1
C2
120p
R2
47K
R6
2K
R7
100R
R1
22K
RIAA filter
C3
68n
R3
3k16
C3*
68n
C4
100n
U1B
NJM4580
R4
4K7
R5
220R
C5
100uF
C1
10uF
M2
M4
M9
PhonoOut1
U2A
NJM4580
R_IN
GND2
C7
120p
R9
47K
R13
2K
R14
100R
R8
22K
C8
68n
R10
3k16
C8*
68n
C9
100n
U2B
NJM4580
R11
4K7
R12
220R
C10
100uF
C6
10uF
M6
M8
M10
PhonoOut2
LIN-
LOUT
R15
2K
R17
2K
RIN-
ROUT
R16
2K
R18
2K
U3A
PhonoOut1
PhonoOut2
R19
100R
R20
100R
LIN-
RIN-
LIN-
LIN+
RIN-
RIN+
LVCC+
RVCC+
LOUT
ROUT
EP
LVCC-
RVCC-
TPA6120A2DWPR
+12V
-12V
C11
100n
C15
100n
C17
100n
C18
100n
R21
10R
R22
10R
LOUT
ROUT
U4
NJM78L09UA-TE1
VOUT VIN
GND
FB1
C27
100n
C23
100n
C24
100n
U5
NJM79L09SU3-TE1
FB2
C28
100n
C25
100n
C26
100n
C12
100n
C13
100n
C19
150uF
C20
150uF
C16
100n
C14
100n
C21
150uF
C22
150uF
P_GND