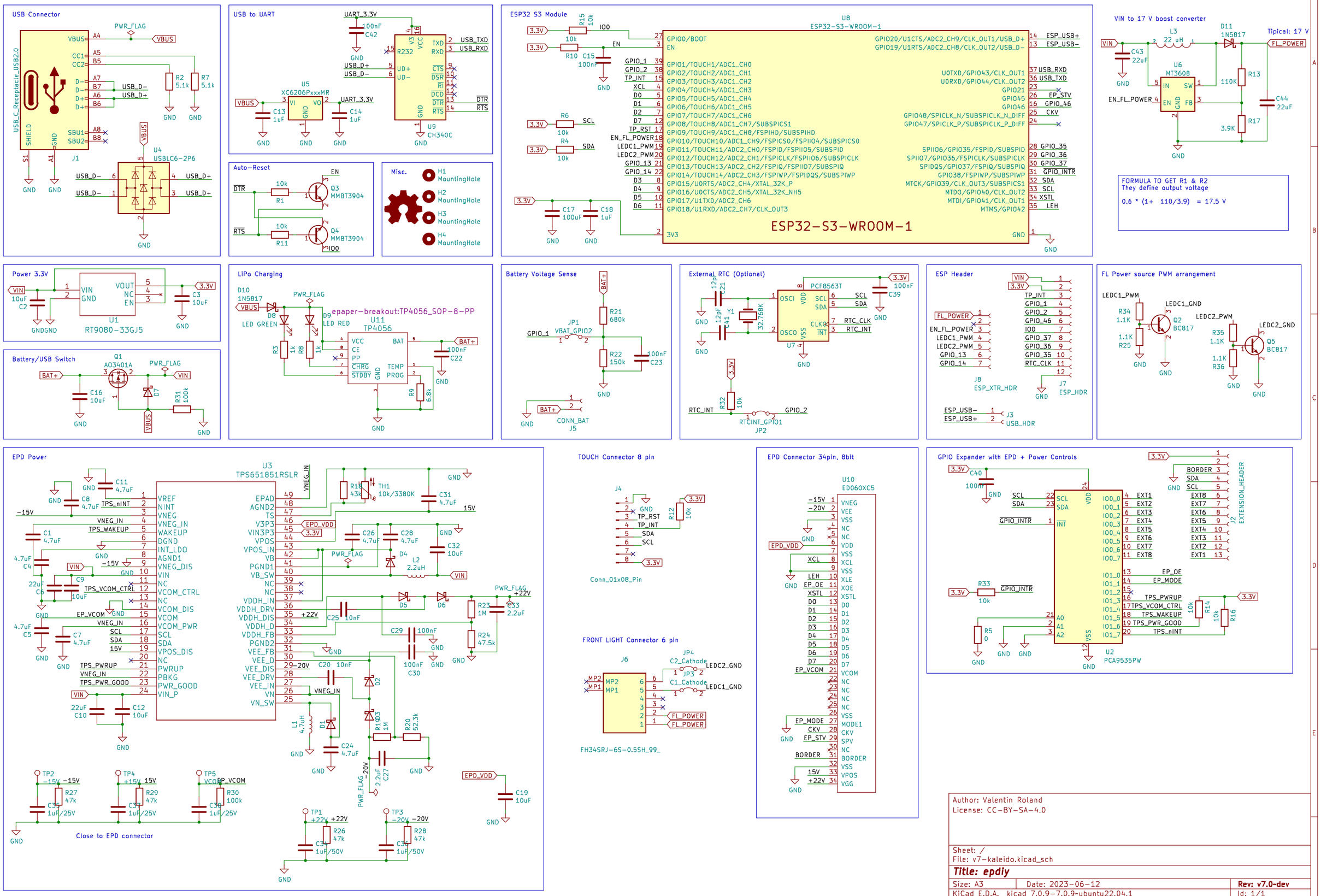
USB Connector
USB to UART
ESP32 S3 Module
VIN to 17 V boost converter
Auto-Reset
Misc.
Power 3.3V
LiPo Charging
Battery Voltage Sense
External RTC (Optional)
ESP Header
FL Power source PWM arrangement
Battery/USB Switch
EPD Power
TOUCH Connector 8 pin
EPD Connector 34pin, 8bit
GPIO Expander with EPD + Power Controls
FRONT LIGHT Connector 6 pin
ESP32-S3-WROOM-1
Author: Valentin Roland
License: CC-BY-SA-4.0
Sheet: /
File: v7-kaleido.kicad_sch
Title: epdiy
Size: A3
Date: 2023-06-12
Rev: v7.0-dev
KiCad E.D.A. kicad 7.0.9-7.0.9~ubuntu22.04.1
Id: 1/1