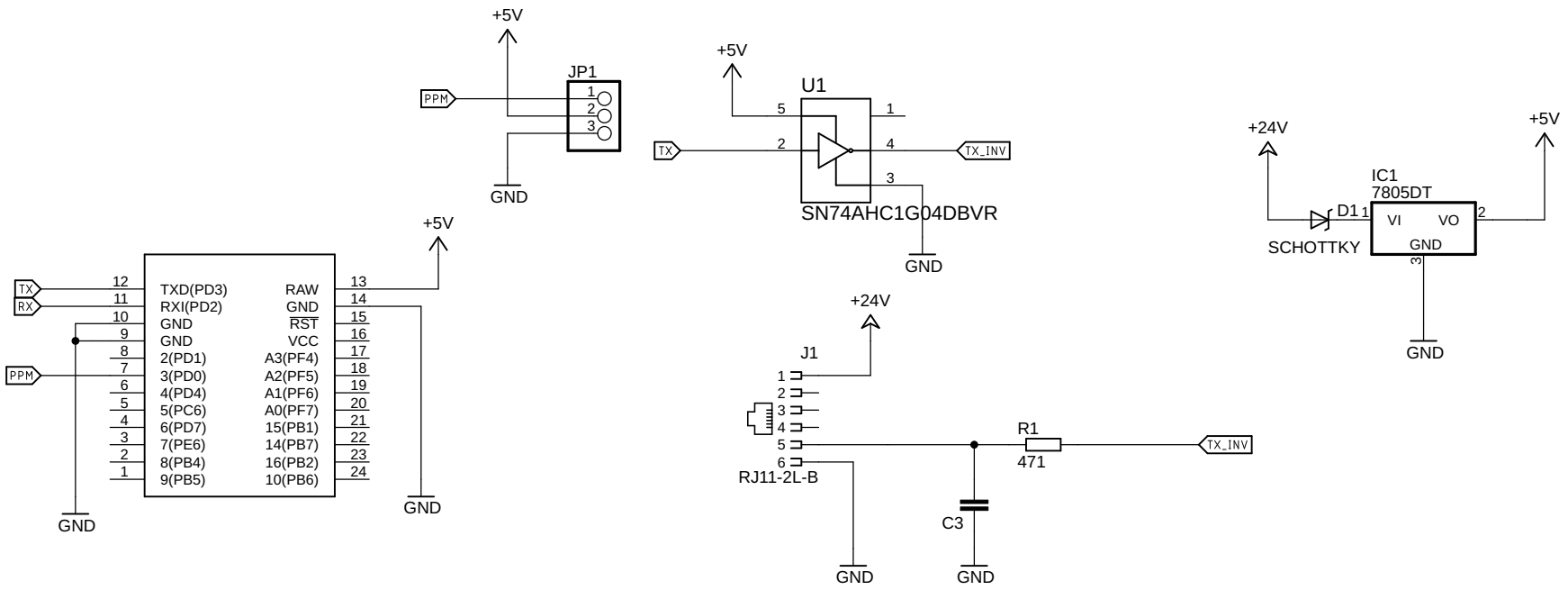

Drawn by: Miklos Marton martonmiklosqdev@gmail.com	pro_micro_adapter
	2022. 01. 16. 21:39
	Sheet: 1/1