ES120 Spring 2018 – Midterm 1 Review w/ Solutions

Matheus Fernandes

March 8, 2018

Document Disclaimer

The list provided below is by no means comprehensive and if you find anything missing that you would like to add please let me know. This review session has been created without prior knowledge of the problems in the exam and should not be treated in any way as hints to problems that will be asked in the exam. We will do our best to go over the topics of the course in detail however please do your own reading of chapters 1,2 and 3 as well as other topics not included in the book. If you find any typos please let me know and I will update and push a new version to Github ASAP.

You may also find my notes from a previous year helpful: `http://fer.me/es120notes`

This document was edited last on **Friday 9th March, 2018 at 9:07am**

Topics Covered Summary

1. **Introduction – Concepts of Stress**
   - **Normal Stress** – $\sigma = \frac{P}{A}$, where A is perpendicular to direction of force
   - **Shearing Stress** – $\tau_{ave} = \frac{P}{A}$, where A is parallel to the direction of force
   - **Stresses under general loading conditions** - Determining the different components of stress from FBD such as σ_{xx}, σ_{yy} and τ_{xy}.
   - **Ultimate stress** – $\sigma_U = \frac{P_u}{A}$
   - **Factor of Safety** – F.S.$= \frac{\text{ultimate load}}{\text{allowable load}} = \frac{\text{ultimate stress}}{\text{allowable stress}}$
   - **Truss Systems** – How to efficiently solve a truss system using method of sections
2. **Stress and Strain – Axial Loading**
   - **Strain** – $\epsilon = \frac{\delta}{L}$
   - **Elastic Stress-Strain Diagram** – Linear Relationship
   - **Plastic Stress-Strain Diagram** – Ideal plasticity with yield stress σ_Y
   - **True Stress and True Strain** – Difference between True and Engineering is the cross-sectional area. True stress uses A of deformed specimen.
   - **Hooke's Law** – $\sigma = E\epsilon$
   - **General Stress State** – Symmetric positive definite matrix of σ_{ij}
   - **Modulus of Elasticity** – E
   - **Elastic vs. Plastic Behavior of Material** – Necking, yield stress, rupture etc.
   - **Fatigue** – In cases of cyclic loading, rupture will occur at a stress much lower than the static breaking strength; this phenomenon is called fatigue.
   - **Deformations of Members Under Axial Loading** – $\delta = \frac{PL}{AE}$
   - **Statically Indeterminate Problems** – Problems that cannot be determined using statics, but where we need to formulate a compatibility constraint. This occurs when we have more reaction forces to solve for than we have equations.
   - **Problems involving temperature changes** – Thermal strain $\epsilon_T = \alpha\Delta T$. This does not create a stress until it is statically constrained and as per superposition the thermal strain becomes mechanical strain.
   - **Superposition Method** – In statically indeterminate problems we remove redundant loads and apply superposition to solve for the different unknown loads.

- **Thermal Stress in a Film on a Substrate** – This is the problem he worked out in class. My notes can be found here `http://fer.me/l/pbFeFA`
- **Poisson's Ratio** – Relates lateral and axial strains through $\nu = -\frac{\text{lateral strain}}{\text{axial strain}}$
- **Multiaxial loading** – Loading through multiple axis and the relationship to strain
- **Generalized Hooke's Law** – Generalized relationship between all stresses, strains and material parameters through equations of form $\epsilon_x = \frac{1}{E}(\sigma_x - \nu\sigma_y - \nu\sigma_z)$, $\epsilon_y = \frac{1}{E}(\sigma_y - \nu\sigma_x - \nu\sigma_z)$, $\epsilon_z = \frac{1}{E}(\sigma_z - \nu\sigma_y - \nu\sigma_x)$
- **Plane Strain** – $\epsilon_z = 0$
- **Plane Stress** – $\sigma_z = 0$
- **Bulk Modulus** – Change of volume per unit volume described by $k = \frac{E}{3(1-2\nu)}$
- **Shearing Strain** – Nondimensional deformation due to shearing stress γ_{xy}
- **Hooke's law for shearing stress and strain** – $\tau_{xy} = G\gamma_{xy}$
- **Modulus of Rigidity** – Empirical value to relates shear stress to shear strain G. Analogous to modulus of elasticity E.
- **Relation among E, ν, G** – $\frac{E}{2G} = 1 + \nu$
- **Stress Concentrations** – $K = \frac{\sigma_{max}}{\sigma_{avg}}$
- **Plastic Deformation** – Elastoplastic material stress strain curve. Gain intuition from this curve.
- **Residual Stresses** – Stresses left in a part post plastic deformation

3. <u>**Torsion**</u>
   - **Deformation in a Circular shaft** – $\gamma = \frac{\rho\phi}{L}$
   - **Average shearing strain** – $\gamma = \frac{\rho}{c}\gamma_{max}$
   - **Torsion Stresses** – Shear stresses due to torsion $\tau = \frac{T\rho}{J}$ where J is the polar moment of inertia: `http://fer.me/git/es120notes/blob/master/Section4/J-list.pdf`
   - **Torsion Stresses in the Elastic Range** – As long as the yield strength is not exceeded in any part of circualr shaft, the shearing stress in that shaft varies linearly with distance ρ from the axis of the shaft such that $\tau = \frac{\rho}{c}\tau_{max}$
   - **Angle of Twist in the Elastic Range** – $\phi = \frac{TL}{JG}$
   - **Statically Indeterminate Shafts** – This is analogous to non-torsional statically indeterminate problems, where we need to find a compatibility equation to constrain the different reaction forces we cannot solve for using statics.
   - **Design of Transmission Shafts** – This simply builds the relationship of what we have learned to power, frequency and torque, namely, $T = \frac{P}{2\pi f}$
   - **Stress concentration in circular shafts** – $\tau_{max} = K\frac{Tc}{J}$, where $\frac{Tc}{J}$ is the stress computed for the smaller-diameter shaft and K is a tabulated stress-concentration factor obtained from an empirical curve.
   - **Plastic Deformation in Circular Shafts** – $R_t = \frac{T_u c}{J}$, where R_t is the modulus of rupture, and T_u is the ultimate torque of the shaft
   - **Circular shafts made of Elastoplastic Material** – $T = \frac{4}{3}T_Y\left(1 - \frac{1}{4}\frac{\phi_Y^3}{\phi^3}\right)$ is the relationship between the torque and the angle of twist of a elastoplastic shaft. There are also relationships derived in section 3.10 that discuss it in the form of the radius ρ. It is worth reviewing the derivation of this section in detail.
   - **Torsion of non-circular members** – Using tabulated values we can find an expression for maximum shear $\tau_{max} = \frac{T}{c_1 ab^2}$ and angle of twist $\phi = \frac{TL}{c_2 ab^3 G}$ where a and b are the lengths of the sides and c_1 and c_2 are coefficients determined empirically. Note that for large values of a/b the coefficients become $c_1 = c_2 \approx \frac{1}{3}$
   - **Thin-walled hollow shafts** – Integrate through an idea of shear flow to obtain a relationship between an equivalent area and the torque such that we can concentrate the shear only on the thin amount of material to obtain $\tau = \frac{T}{2t\mathcal{A}}$, where $\mathcal{A}$ is the area of the region from the centerline of the thin-wall to the center of the shaft
   - **Dynamics Torsion Problems** – What is the frequency of a rods vibration if twisted and allowed to freely vibrate torsionally. This can be solved to be a wave equation of form $\frac{\partial^2\rho}{\partial t^2} = c^2\frac{\partial^2\rho}{\partial x^2}$. My notes on this matter can be found here: `http://fer.me/l/Nh1grt`

Review Problems

Problem 1:

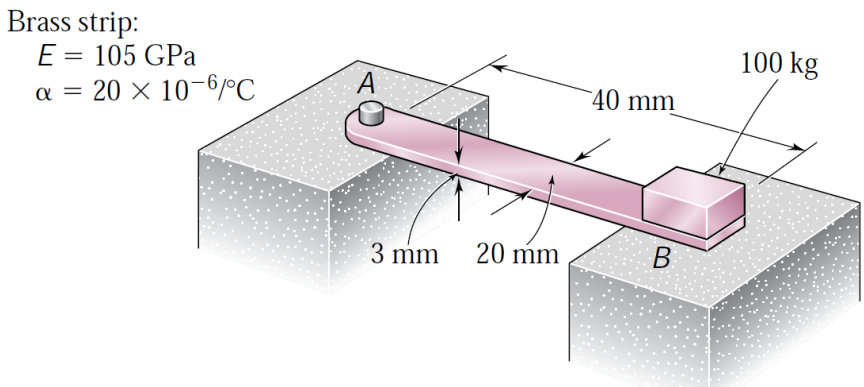

Figure 1

The brass strip AB has been attached to a fixed support at A and rests on a rough support at B. Knowing that the coefficient of friction is 0.60 between the strip and the support at B, determine the decrease in temperature for which slipping will impend.

Solution 1

As always, lets begin by drawing a FBD of the problem to better understand the forces acting on the body.

Figure 2: FBD of stated problem

The weight acting on the device will create a friction force between the bottom of the brass strip and the rough surface. We can compute that force as a result of the normal force.

Now lets do force balance on both directions.

$$\Sigma F_y = 0 : N - W = 0 \Rightarrow N = W \tag{1}$$

$$\Sigma F_x = 0 : P - \mu N = 0 \Rightarrow P = \mu W = \mu mg \tag{2}$$

We know that for slipping to impend we need to find when the the thermal strain will cause a horizontal force that is grater than what the friction will be able to overcome. So assuming there there is no slipping we know based on superposition that the displacement of the thermal strain has to balance the mechanical displacement giving us the following compatibility constraint:

$$\delta = -\frac{PL}{EA} + L\alpha(\Delta T) = 0 \tag{3}$$

Therefore solving this equation for ΔT we obtain:

$$\Delta T = \frac{P}{EA\alpha} = \frac{\mu mg}{EA\alpha} \tag{4}$$

And if we plug in the values from the problem statement we obtain

$$\boxed{\Delta T = \frac{(0.6)(100)(9.81)}{(105 \times 10^9)(60 \times 10^{-6})(20 \times 10^{-6})} = 4.67^\circ\text{C}} \tag{5}$$

Problem 2:

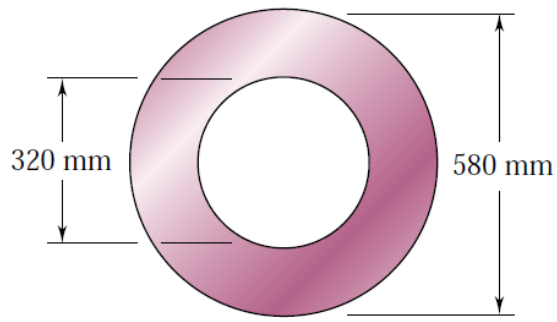

Figure 3

One of the two hollow steel drive shafts of an ocean liner is 75 m long and has the cross section shown. Knowing that $G = 77.2$ GPa and that the shaft transmits 44 MW to its propeller when rotating at 144 rpm, determine (a) the maximum shearing stress in the shaft, (b) the angle of twist of the shaft.

Solution 2

For this problem we need to recall how to associate power to frequency and torque. But before that we need to convert rpm into Hz for the frequency, namely

$$f = 144 \text{ rmp} = \frac{144}{60} = 2.4 \text{ Hz} \tag{6}$$

Now from the equation relating power and torque we can solve for torque, namely

$$P = 2\pi f T \Rightarrow T = \frac{P}{2\pi f} = \frac{44 \times 10^6}{2\pi(2.4)} = 2.917 \times 10^6 \text{ N} \cdot \text{m} \tag{7}$$

So that we can compute the maximum shear stress and the angle of twist, we need to first determine the polar second moment of inertia of a shaft with this cross-section (`http://fer.me/git/es120notes/blob/master/Section4/J-list.pdf`), namely,

$$J = \frac{\pi}{2}(c_2^4 - c_1^4) = \frac{\pi}{2}\left(0.290^4 - 0.160^4\right) = 10.08 \times 10^{-3} \text{ m} \tag{8}$$

Part (a)

To find the maximum shear we know that we need to evaluate our shear-torque relation at $\rho =$ outer edge so that we obtain

$$\boxed{\tau_{max} = \frac{Tc_2}{J} = \frac{(2.917 \times 10^6)(0.290)}{(10.08 \times 10^{-3})} = 83.9 \text{ MPa}} \tag{9}$$

Part (b)

To obtain the angle of twist ,we now depend on the length of the rod and must enter that information such that

$$\boxed{\phi = \frac{TL}{GJ} = \frac{(2.9178 \times 10^6)(75)}{(77 \times 10^9)(10.08 \times 10^{-3})} = 2.81.9 \times 10^{-3} \text{ rad} = 16.15^\circ} \tag{10}$$

Problem 3:

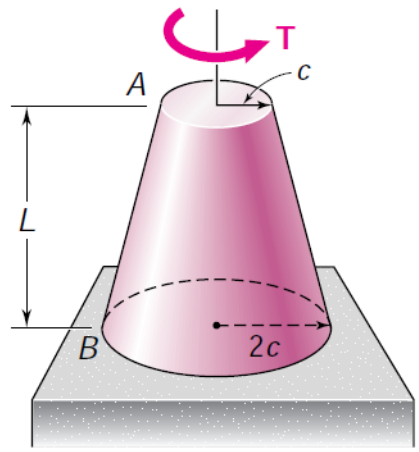

Figure 4

A torque **T** is applied as shown to a solid tapered shaft AB. Show by integration that the angle of twist at A is

$$\phi = \frac{7TL}{12\pi G c^4}$$

Solution 3

A rule of thumb is that if something varies in cross-section, modulus or weight as a function of space, it is easy to spot an integral coming somewhere within the problem. So, since this problem varies in cross-section as a function of space, we know that we likely will have to integrate in space. Let's begin by defining some coordinate system to make our lives a bit easier.

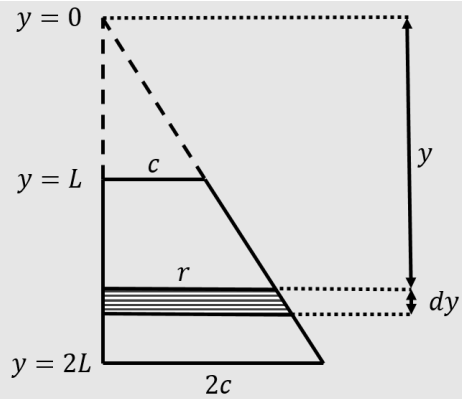

Figure 5: Coordinate system definition for problem.

Here,

$$r = \frac{cy}{L} \tag{11}$$

So if we consider a infinitesimal length dy and assume there will be an infinitesimal angle of twist $d\phi$ though that infinitesimal space, we can obtain the following relationship

$$d\phi = \frac{Tdy}{GJ} \tag{12}$$

We know from `http://fer.me/git/es120notes/blob/master/Section4/J-list.pdf` what J is

$$J = \frac{\pi}{2} r^4 \tag{13}$$

We also know from eq. (11) what r is. So plugging this information into eq. (12) we obtain

$$d\phi = \frac{2TL^4 dy}{\pi G c^4 y^4} \tag{14}$$

Now that we have this differential equation, we must INTEGRATE (not pull teeth) 🙂 both sides

$$\phi = \int_L^{2L} \frac{2TL^4}{\pi G c^4} \frac{dy}{y^4} = \frac{2TL^4}{\pi G c^4} \int_L^{2L} \frac{dy}{y^4} \tag{15}$$

where we separate what is a function of y and what isn't. We must only integrate was is a function of y since the differential equation is a derivative of space. So this integral becomes,

$$\begin{aligned} \phi &= \frac{2TL^4}{\pi G c^4} \left\{ -\frac{1}{3y^3} \right\}_L^{2L} \\ &= \frac{2TL^4}{\pi G c^4} \left\{ -\frac{1}{24L^3} + \frac{1}{3L^3} \right\} \\ &= \frac{2TL^4}{\pi G c^4} \left\{ \frac{7}{24L^3} \right\} \\ &\boxed{= \frac{7TL}{12\pi G c^4}} \end{aligned} \tag{16}$$

See, the integral wasn't that bad...