Pi4GPU (PiG)

PCB Project: Pi4GPU (PiG)
Version: V1
Revision: R1
Project State: Released (2022-11-29)
Variant: STD_PRO
Print date: 08.04.2023

TOP VIEW

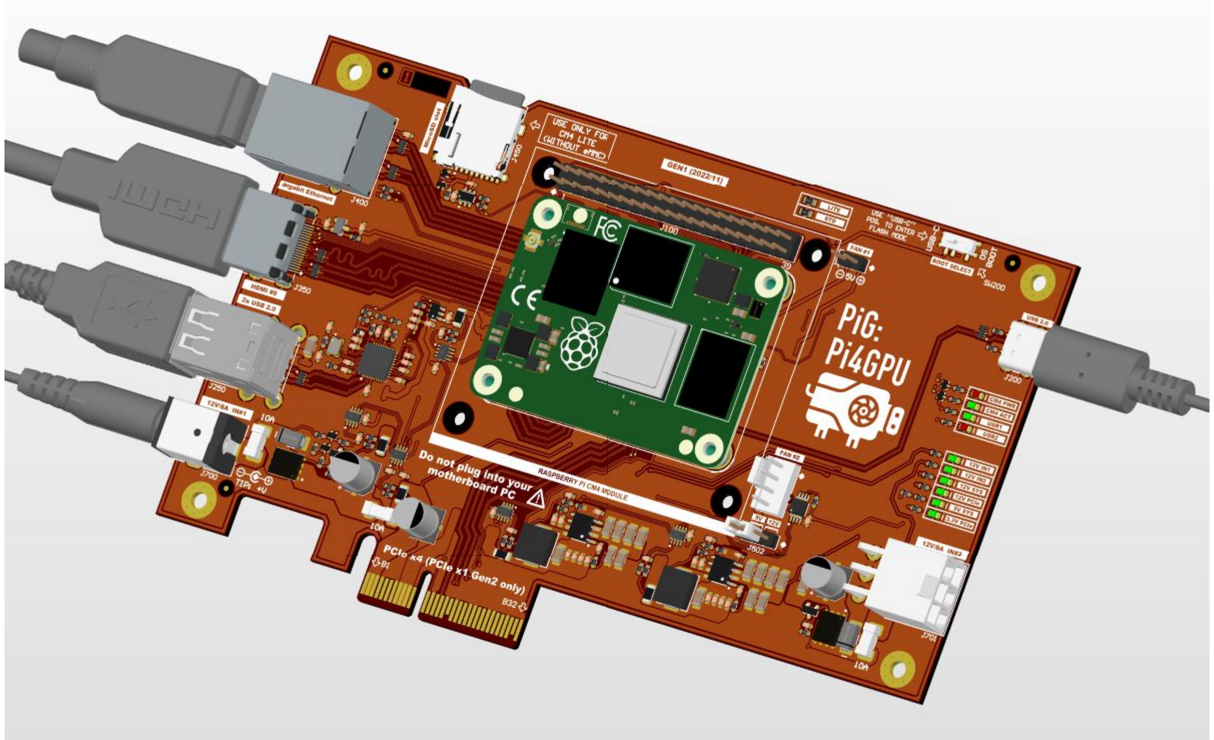
USE ONLY FOR CM4 LITE (WITHOUT eMMC)
GEN1 (2022/11)
PiG: Pi4GPU
Do not plug into your motherboard PC
RASPBERRY PI CM4 MODULE
PCIe x4 (PCIe x1 Gen2 only)
Gigabit Ethernet
HDMI
2x USB 2.0
12V/8A IN#1
12V/8A IN#2
USB 2.0
BOOT SELECT
J100
J200
J400
J700
J701

Page	Index
---	---------------------------
01	Cover page
02	Block diagram
03	Top schematic
04	CM4 module - part #1
05	CM4 module - part #2
06	USB C interface
07	USB Hub
08	PCIe x4 slot
09	HDMI
10	100/1000M Ethernet
11	MicroSD card
12	MISC
13	Power supply #1
14	Power supply #2
15	Sensors
16	PCB marking and mechnics
17	Hardware changelog

[02] Block_diagram.SchDoc

[03] Top.SchDoc

PCB
PCB BARE BOARD

Mirkotronics
Mirkotronics
Aleksandry 3/89, 30-837 Kraków, POLAND
Size A3
Title Pi4GPU (PiG)
Version V1
Revision R1
Project: Pi4GPU (PiG)
Variant: STD_PRO
Designer: M. Folejewski
File Name: [01] Cover_page.SchDoc
RefDes: -
Sheet: 1 / 15
Printed: 08.04.2023

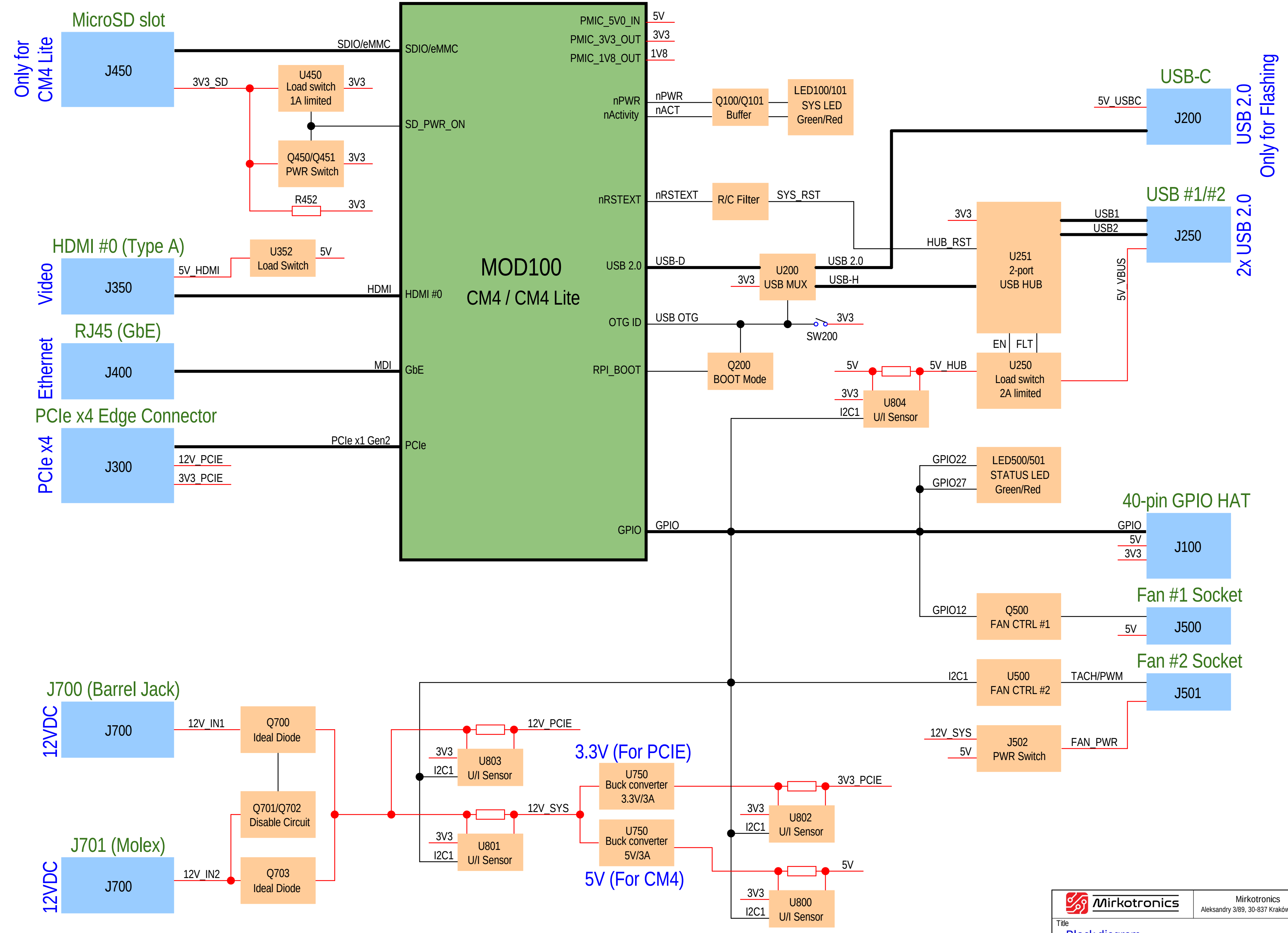
Only for CM4 Lite
MicroSD slot
J450
SDIO/eMMC
3V3_SD
U450
Load switch
1A limited
3V3
Q450/Q451
PWR Switch
3V3
R452
3V3
SD_PWR_ON
HDMI #0 (Type A)
Video
J350
5V_HDMI
U352
Load Switch
5V
HDMI
HDMI #0
RJ45 (GbE)
Ethernet
J400
MDI
GbE
PCIe x4 Edge Connector
PCIe x4
J300
PCIe x1 Gen2
PCIe
12V_PCIE
3V3_PCIE
MOD100
CM4 / CM4 Lite
PMIC_5V0_IN
5V
PMIC_3V3_OUT
3V3
PMIC_1V8_OUT
1V8
nPWR
nActivity
nPWR
nACT
Q100/Q101
Buffer
LED100/101
SYS LED
Green/Red
USB-C
J200
5V_USBC
USB 2.0
Only for Flashing
nRSTEXT
nRSTEXT
R/C Filter
SYS_RST
USB #1/#2
J250
2x USB 2.0
USB1
USB2
3V3
HUB_RST
U251
2-port
USB HUB
USB 2.0
USB-D
3V3
U200
USB MUX
USB 2.0
USB-H
5V_VBUS
OTG ID
USB OTG
3V3
SW200
EN
FLT
RPI_BOOT
Q200
BOOT Mode
5V
5V_HUB
U250
Load switch
2A limited
3V3
I2C1
U804
U/I Sensor
GPIO22
GPIO27
LED500/501
STATUS LED
Green/Red
40-pin GPIO HAT
GPIO
GPIO
GPIO
5V
3V3
J100
Fan #1 Socket
GPIO12
Q500
FAN CTRL #1
5V
J500
Fan #2 Socket
I2C1
U500
FAN CTRL #2
TACH/PWM
J501
12V_SYS
5V
J502
PWR Switch
FAN_PWR
J700 (Barrel Jack)
12VDC
J700
12V_IN1
Q700
Ideal Diode
Q701/Q702
Disable Circuit
J701 (Molex)
12VDC
J700
12V_IN2
Q703
Ideal Diode
12V_PCIE
3V3
I2C1
U803
U/I Sensor
12V_SYS
3V3
I2C1
U801
U/I Sensor
3.3V (For PCIE)
U750
Buck converter
3.3V/3A
U750
Buck converter
5V/3A
5V (For CM4)
3V3_PCIE
3V3
I2C1
U802
U/I Sensor
5V
3V3
I2C1
U800
U/I Sensor
1
2
3
4
5
6
7
8
A
B
C
D

Mirkotronics
Mirkotronics
Aleksandry 3/89, 30-837 Kraków, POLAND

Size	A4
Title	Block diagram
Version	V1
Project:	Pi4GPU (PiG)
Variant:	STD_PRO
Designer:	M. Folejewski
File Name:	[02] Block_diagram.SchDoc
RefDes:	1-99
Sheet:	2 / 15
Printed:	08.04.2023
Revision	R1

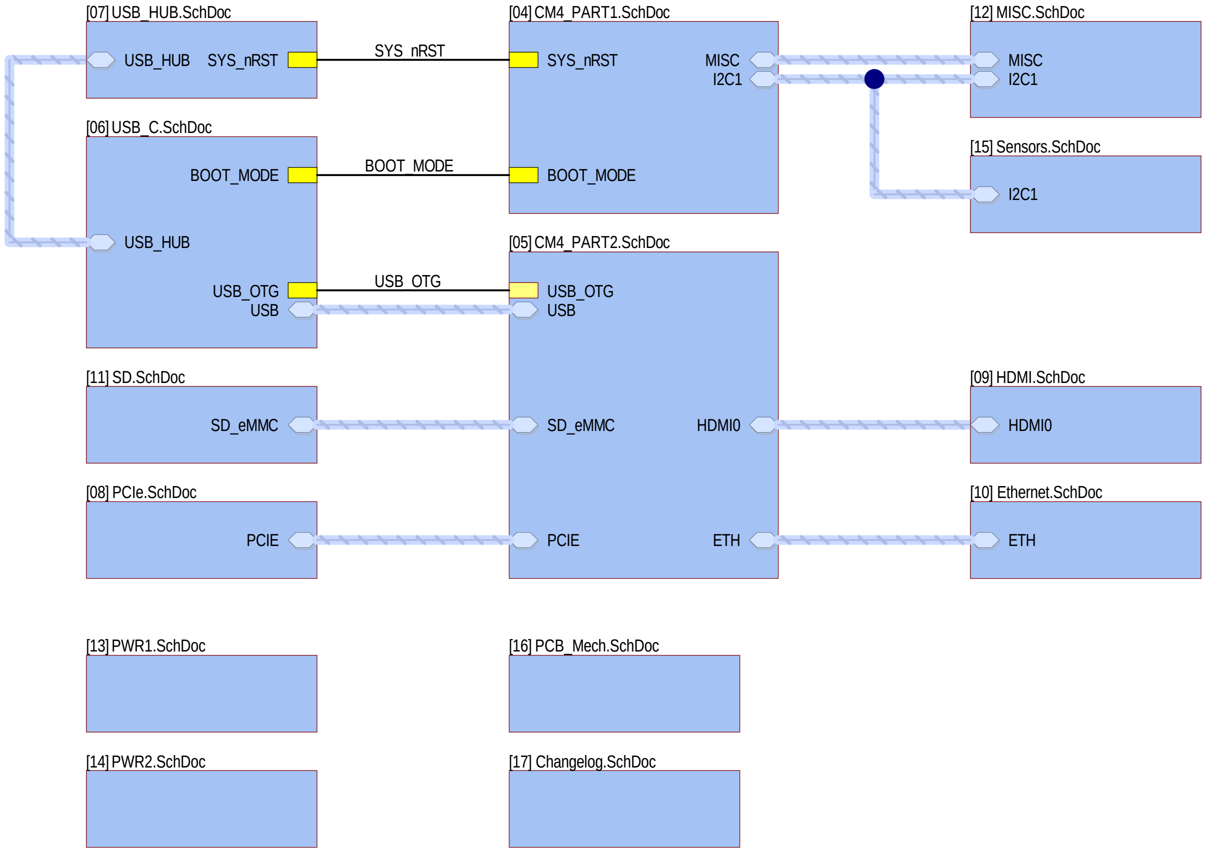
[07] USB_HUB.SchDoc
USB_HUB
SYS_nRST
SYS_nRST
[04] CM4_PART1.SchDoc
SYS_nRST
MISC
I2C1
BOOT_MODE
[12] MISC.SchDoc
MISC
I2C1
[15] Sensors.SchDoc
I2C1
[06] USB_C.SchDoc
BOOT_MODE
BOOT_MODE
USB_HUB
USB_OTG
USB
USB_OTG
[05] CM4_PART2.SchDoc
USB_OTG
USB
[11] SD.SchDoc
SD_eMMC
SD_eMMC
HDMI0
[09] HDMI.SchDoc
HDMI0
[08] PCIe.SchDoc
PCIE
PCIE
ETH
[10] Ethernet.SchDoc
ETH
[13] PWR1.SchDoc
[16] PCB_Mech.SchDoc
[14] PWR2.SchDoc
[17] Changelog.SchDoc

Mirkotronics

Mirkotronics
Aleksandry 3/89, 30-837 Kraków, POLAND

Size
A4

Title
Top schematic

Version
V1

Project: Pi4GPU (PiG)
Variant: STD_PRO
Designer: M. Folejewski
File Name: [03] TOP.SchDoc

RefDes: 1-99
Sheet: 3 / 15
Printed: 08.04.2023

Revision
R1

CM4 MODULE (PART #1)

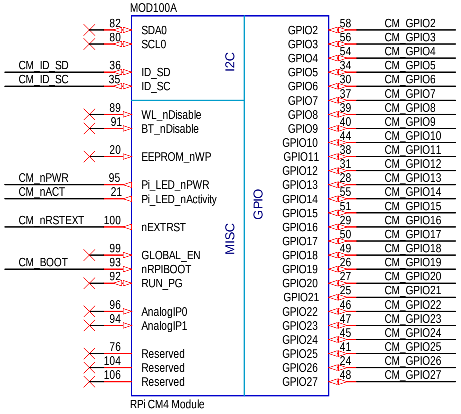
MOD100A
82 SDA0
80 SCL0
CM_ID_SD 36 ID_SD
CM_ID_SC 35 ID_SC
I2C
89 WL_nDisable
91 BT_nDisable
20 EEPROM_nWP
CM_nPWR 95 Pi_LED_nPWR
CM_nACT 21 Pi_LED_nActivity
CM_nRSTEXT 100 nEXTRST
99 GLOBAL_EN
CM_BOOT 93 nRPIBOOT
92 RUN_PG
MISC
96 AnalogIP0
94 AnalogIP1
76 Reserved
104 Reserved
106 Reserved
GPIO
GPIO2 58 CM_GPIO2
GPIO3 56 CM_GPIO3
GPIO4 54 CM_GPIO4
GPIO5 34 CM_GPIO5
GPIO6 30 CM_GPIO6
GPIO7 37 CM_GPIO7
GPIO8 39 CM_GPIO8
GPIO9 40 CM_GPIO9
GPIO10 44 CM_GPIO10
GPIO11 38 CM_GPIO11
GPIO12 31 CM_GPIO12
GPIO13 28 CM_GPIO13
GPIO14 55 CM_GPIO14
GPIO15 51 CM_GPIO15
GPIO16 29 CM_GPIO16
GPIO17 50 CM_GPIO17
GPIO18 49 CM_GPIO18
GPIO19 26 CM_GPIO19
GPIO20 27 CM_GPIO20
GPIO21 25 CM_GPIO21
GPIO22 46 CM_GPIO22
GPIO23 47 CM_GPIO23
GPIO24 45 CM_GPIO24
GPIO25 41 CM_GPIO25
GPIO26 24 CM_GPIO26
GPIO27 48 CM_GPIO27
RPi CM4 Module

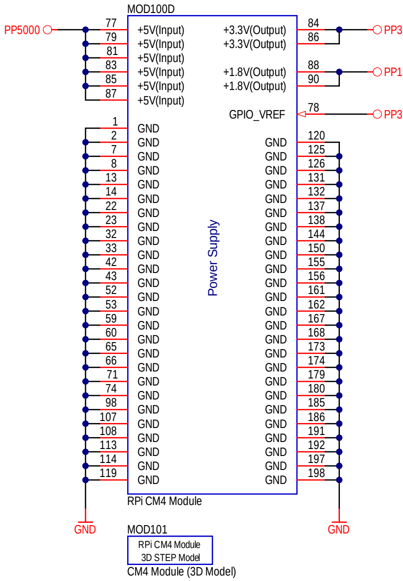
MOD100D
PP5000
77 79 81 83 85 87 +5V(Input)
+3.3V(Output) 84 86 PP3300
+1.8V(Output) 88 90 PP1800
GPIO_VREF 78 PP3300
GND
1 2 7 8 13 14 22 23 32 33 42 43 52 53 59 60 65 66 71 74 98 107 108 113 114 119
120 125 126 131 132 137 138 144 150 155 156 161 162 167 168 173 174 179 180 185 186 191 192 197 198
Power Supply
RPi CM4 Module
GND
GND
MOD101
RPi CM4 Module
3D STEP Model
CM4 Module (3D Model)

SCH:

I2C0 Interface: SCL0 pin (GPIO45) and SDA0 pin (GPIO44) typically are used for Camera and Displays and have Internal 1.8k pull up to CM4_3.3V.
ID Interface (ID_SD/ID_SC): CM4 datasheet does not mention about pull-up resistors on ID_SD and ID_SC pins.

I2C1 (GPIO2/GPIO3) have 1.8k pull-up resistors added on CM 4 module.

SCH:

I2C (ID_SD/ID_SC): This I2C bus is normally used for identifying HATs (HAT ID EEPROM) and controlling CSI0 and DSI0 devices.

At boot time this I2C interface will beinterrogated to look for an EEPROM that identifes the attached board andallows automagic setup of the GPIOs (and optionally, Linux drivers).

DO NOT USE these pins for anything other than attaching an I2C ID EEPROM. Leave unconnected if ID EEPROM not required.

SCH:

I2C0 (SDA0/SCL0): This internal I2C bus is normally allocated to the CSI1 and DSI1 as these devices are controlled by the firmware.

SCH:

nRPIBOOT: A low on this pin force booting from an RPI server. If not used leave floating. Internally pulled via 10K to +3.3V.

SCH:

EEPROM_nWP pin: Leaving floating NB internally pulled up to CM4_3.3V via 100k (VIL <0.8V) but can be grounded to prevent writing to the on board EEPROM which stores the bootcode.

SCH:

1.8V and 3.3V Outputs +/-2.5%. Power Output max 300mA per pin for a total of 600mA. This will be powered down during power off or GLOBAL_EN being set low.

SCH:

GLOBAL_EN: Drive low to power off CM4. Internally pulled up with a 100K to +5V.

40-PIN GPIO HEADER

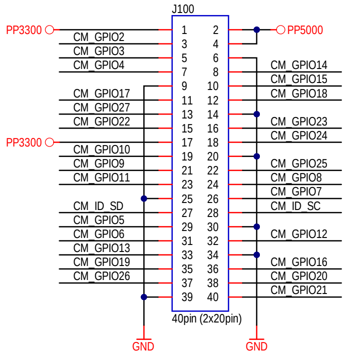
J100
PP3300 1 2 PP5000
CM_GPIO2 3 4
CM_GPIO3 5 6
CM_GPIO4 7 8 CM_GPIO14
9 10 CM_GPIO15
CM_GPIO17 11 12 CM_GPIO18
CM_GPIO27 13 14
CM_GPIO22 15 16 CM_GPIO23
PP3300 17 18 CM_GPIO24
CM_GPIO10 19 20
CM_GPIO9 21 22 CM_GPIO25
CM_GPIO11 23 24 CM_GPIO8
25 26 CM_GPIO7
CM_ID_SD 27 28 CM_ID_SC
CM_GPIO5 29 30
CM_GPIO6 31 32 CM_GPIO12
CM_GPIO13 33 34
CM_GPIO19 35 36 CM_GPIO16
CM_GPIO26 37 38 CM_GPIO20
39 40 CM_GPIO21
40pin (2x20pin)
GND
GND

TESTPOINTS (DEBUG)

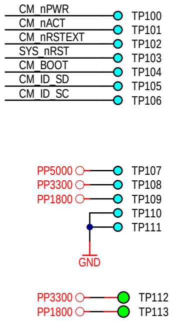
CM_nPWR TP100
CM_nACT TP101
CM_nRSTEXT TP102
SYS_nRST TP103
CM_BOOT TP104
CM_ID_SD TP105
CM_ID_SC TP106
PP5000 TP107
PP3300 TP108
PP1800 TP109
TP110
TP111
GND
PP3300 TP112
PP1800 TP113

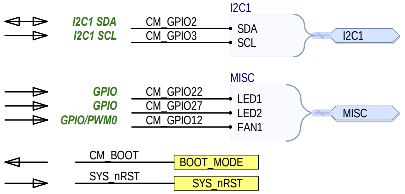
I2C1
I2C1 SDA CM_GPIO2 SDA
I2C1 SCL CM_GPIO3 SCL
I2C1
MISC
GPIO CM_GPIO22 LED1
GPIO CM_GPIO27 LED2
GPIO/PWM0 CM_GPIO12 FAN1
MISC
CM_BOOT BOOT_MODE
SYS_nRST SYS_nRST

Used GPIOs:

GPIO2 - I2C1 SDA
GPIO3 - I2C1 SCL

GPIO12 - GPIO/PWM (FAN #1)
GPIO22 - GPIO (USER LED1 Green)
GPIO27 - GPIO (USER LED2 Red)

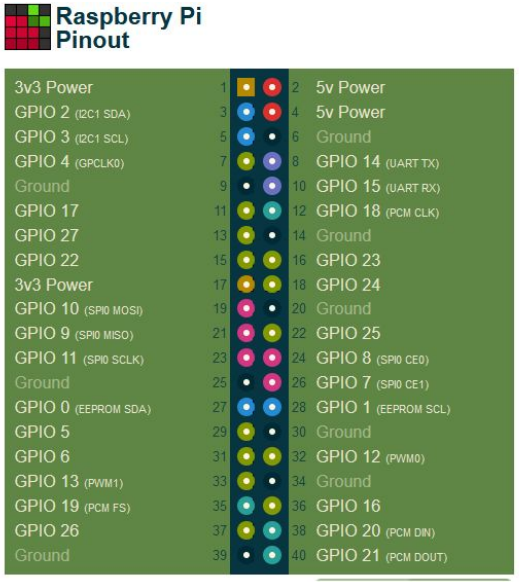
Raspberry Pi Pinout

3v3 Power	1	2	5v Power
GPIO 2 (I2C1 SDA)	3	4	5v Power
GPIO 3 (I2C1 SCL)	5	6	Ground
GPIO 4 (GPCLK0)	7	8	GPIO 14 (UART TX)
Ground	9	10	GPIO 15 (UART RX)
GPIO 17	11	12	GPIO 18 (PCM CLK)
GPIO 27	13	14	Ground
GPIO 22	15	16	GPIO 23
3v3 Power	17	18	GPIO 24
GPIO 10 (SPI0 MOSI)	19	20	Ground
GPIO 9 (SPI0 MISO)	21	22	GPIO 25
GPIO 11 (SPI0 SCLK)	23	24	GPIO 8 (SPI0 CE0)
Ground	25	26	GPIO 7 (SPI0 CE1)
GPIO 0 (EEPROM SDA)	27	28	GPIO 1 (EEPROM SCL)
GPIO 5	29	30	Ground
GPIO 6	31	32	GPIO 12 (PWM0)
GPIO 13 (PWM1)	33	34	Ground
GPIO 19 (PCM FS)	35	36	GPIO 16
GPIO 26	37	38	GPIO 20 (PCM DIN)
Ground	39	40	GPIO 21 (PCM DOUT)

GLOBAL RESET

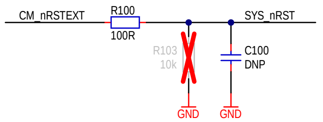
CM_nRSTEXT
R100
100R
SYS_nRST
R103
10k
C100
DNP
GND
GND

SCH:

nEXTRST: Driven low during reset. Driven high (3.3V) once CM4 CPU has started to boot.

ID I2C

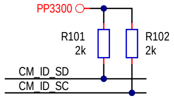
PP3300
R101
2k
R102
2k
CM_ID_SD
CM_ID_SC

SYS LEDs

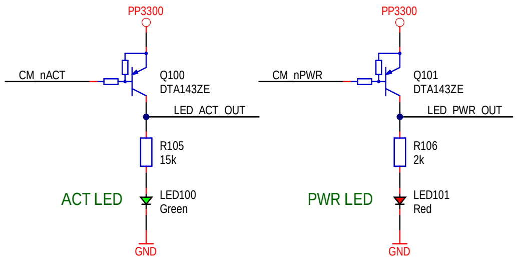
PP3300
CM_nACT
Q100
DTA143ZE
LED_ACT_OUT
R105
15k
ACT LED
LED100
Green
GND
PP3300
CM_nPWR
Q101
DTA143ZE
LED_PWR_OUT
R106
2k
PWR LED
LED101
Red
GND

3V3 LOAD

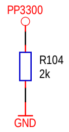
PP3300
R104
2k
GND

SCH:

Extra load on the 3V3 power rail to fix the HDMI issue with 5V LED.

Mirkotronics
Aleksandry 3/89, 30-837 Kraków, POLAND
Size: A3
Title: Compute Module 4 (Part #1)
Version: V1
Project: Pi4GPU (PiG)
Variant: STD_PRO
RefDes: 100-199
Designer: M. Folejewski
Sheet: 4 / 15
Revision: R1
File Name: [04] CM4_PART1.SchDoc
Printed: 08.04.2023

CM4 MODULE (PART #2)

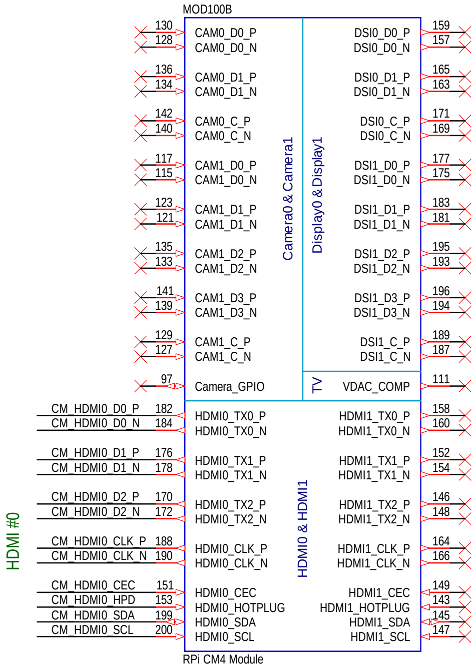
MOD100B
130 CAM0_D0_P
128 CAM0_D0_N
136 CAM0_D1_P
134 CAM0_D1_N
142 CAM0_C_P
140 CAM0_C_N
117 CAM1_D0_P
115 CAM1_D0_N
123 CAM1_D1_P
121 CAM1_D1_N
135 CAM1_D2_P
133 CAM1_D2_N
141 CAM1_D3_P
139 CAM1_D3_N
129 CAM1_C_P
127 CAM1_C_N
97 Camera_GPIO
Camera0 & Camera1
Display0 & Display1
TV
DSI0_D0_P 159
DSI0_D0_N 157
DSI0_D1_P 165
DSI0_D1_N 163
DSI0_C_P 171
DSI0_C_N 169
DSI1_D0_P 177
DSI1_D0_N 175
DSI1_D1_P 183
DSI1_D1_N 181
DSI1_D2_P 195
DSI1_D2_N 193
DSI1_D3_P 196
DSI1_D3_N 194
DSI1_C_P 189
DSI1_C_N 187
VDAC_COMP 111
HDMI #0
CM_HDMI0_D0_P 182 HDMI0_TX0_P
CM_HDMI0_D0_N 184 HDMI0_TX0_N
CM_HDMI0_D1_P 176 HDMI0_TX1_P
CM_HDMI0_D1_N 178 HDMI0_TX1_N
CM_HDMI0_D2_P 170 HDMI0_TX2_P
CM_HDMI0_D2_N 172 HDMI0_TX2_N
CM_HDMI0_CLK_P 188 HDMI0_CLK_P
CM_HDMI0_CLK_N 190 HDMI0_CLK_N
CM_HDMI0_CEC 151 HDMI0_CEC
CM_HDMI0_HPD 153 HDMI0_HOTPLUG
CM_HDMI0_SDA 199 HDMI0_SDA
CM_HDMI0_SCL 200 HDMI0_SCL
HDMI0 & HDMI1
HDMI1_TX0_P 158
HDMI1_TX0_N 160
HDMI1_TX1_P 152
HDMI1_TX1_N 154
HDMI1_TX2_P 146
HDMI1_TX2_N 148
HDMI1_CLK_P 164
HDMI1_CLK_N 166
HDMI1_CEC 149
HDMI1_HOTPLUG 143
HDMI1_SDA 145
HDMI1_SCL 147
RPi CM4 Module

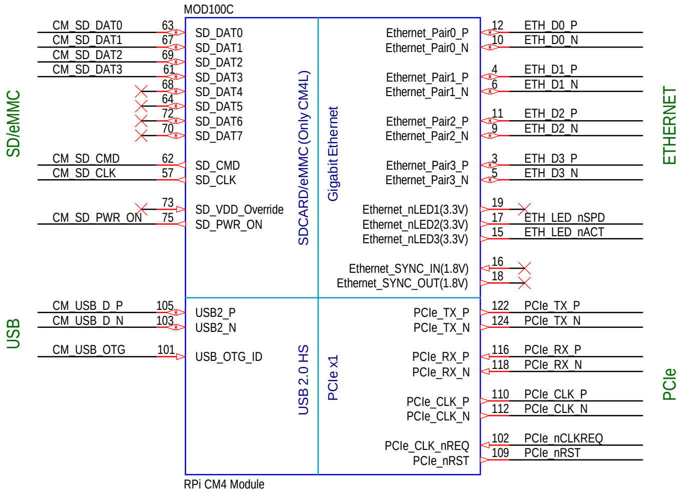
MOD100C
SD/eMMC
CM_SD_DAT0 63 SD_DAT0
CM_SD_DAT1 67 SD_DAT1
CM_SD_DAT2 69 SD_DAT2
CM_SD_DAT3 61 SD_DAT3
68 SD_DAT4
64 SD_DAT5
72 SD_DAT6
70 SD_DAT7
CM_SD_CMD 62 SD_CMD
CM_SD_CLK 57 SD_CLK
73 SD_VDD_Override
CM_SD_PWR_ON 75 SD_PWR_ON
SDCARD/eMMC (Only CM4L)
Gigabit Ethernet
Ethernet_Pair0_P 12 ETH_D0_P
Ethernet_Pair0_N 10 ETH_D0_N
Ethernet_Pair1_P 4 ETH_D1_P
Ethernet_Pair1_N 6 ETH_D1_N
Ethernet_Pair2_P 11 ETH_D2_P
Ethernet_Pair2_N 9 ETH_D2_N
Ethernet_Pair3_P 3 ETH_D3_P
Ethernet_Pair3_N 5 ETH_D3_N
Ethernet_nLED1(3.3V) 19
Ethernet_nLED2(3.3V) 17 ETH_LED_nSPD
Ethernet_nLED3(3.3V) 15 ETH_LED_nACT
Ethernet_SYNC_IN(1.8V) 16
Ethernet_SYNC_OUT(1.8V) 18
ETHERNET
USB
CM_USB_D_P 105 USB2_P
CM_USB_D_N 103 USB2_N
CM_USB_OTG 101 USB_OTG_ID
USB 2.0 HS
PCIe x1
PCIe_TX_P 122 PCIe_TX_P
PCIe_TX_N 124 PCIe_TX_N
PCIe_RX_P 116 PCIe_RX_P
PCIe_RX_N 118 PCIe_RX_N
PCIe_CLK_P 110 PCIe_CLK_P
PCIe_CLK_N 112 PCIe_CLK_N
PCIe_CLK_nREQ 102 PCIe_nCLKREQ
PCIe_nRST 109 PCIe_nRST
PCIe
RPi CM4 Module

SCH:

USB_OTG_ID: Input (3.3V signal) USB OTG Pin. Internal pulled up. The USB_OTG pin is used to select between USB host and device that is typically wired to the ID pin of a Micro usb connector. To use this functionality it must be enabled in the OS that is used. If using either as a fixed slave or fixed master, please tie the USB OTGID pin to ground.

MEZZANINE CONNECTORS

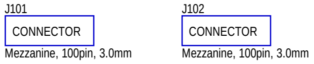
J101
CONNECTOR
Mezzanine, 100pin, 3.0mm
J102
CONNECTOR
Mezzanine, 100pin, 3.0mm

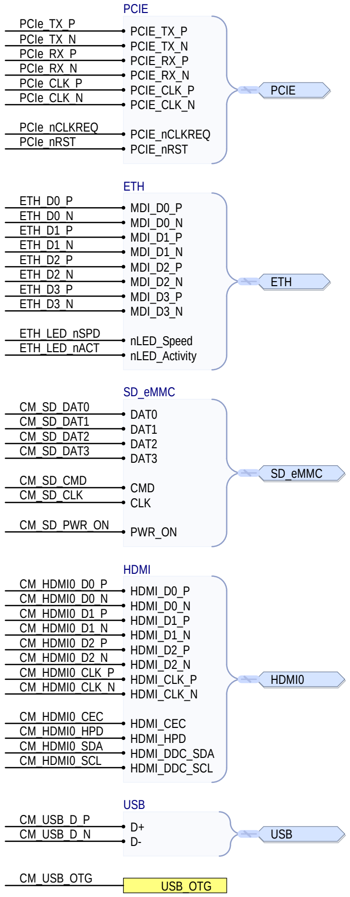
PCIE
PCIe_TX_P PCIE_TX_P
PCIe_TX_N PCIE_TX_N
PCIe_RX_P PCIE_RX_P
PCIe_RX_N PCIE_RX_N
PCIe_CLK_P PCIE_CLK_P
PCIe_CLK_N PCIE_CLK_N
PCIe_nCLKREQ PCIE_nCLKREQ
PCIe_nRST PCIE_nRST
PCIE
ETH
ETH_D0_P MDI_D0_P
ETH_D0_N MDI_D0_N
ETH_D1_P MDI_D1_P
ETH_D1_N MDI_D1_N
ETH_D2_P MDI_D2_P
ETH_D2_N MDI_D2_N
ETH_D3_P MDI_D3_P
ETH_D3_N MDI_D3_N
ETH_LED_nSPD nLED_Speed
ETH_LED_nACT nLED_Activity
ETH
SD_eMMC
CM_SD_DAT0 DAT0
CM_SD_DAT1 DAT1
CM_SD_DAT2 DAT2
CM_SD_DAT3 DAT3
CM_SD_CMD CMD
CM_SD_CLK CLK
CM_SD_PWR_ON PWR_ON
SD_eMMC
HDMI
CM_HDMI0_D0_P HDMI_D0_P
CM_HDMI0_D0_N HDMI_D0_N
CM_HDMI0_D1_P HDMI_D1_P
CM_HDMI0_D1_N HDMI_D1_N
CM_HDMI0_D2_P HDMI_D2_P
CM_HDMI0_D2_N HDMI_D2_N
CM_HDMI0_CLK_P HDMI_CLK_P
CM_HDMI0_CLK_N HDMI_CLK_N
CM_HDMI0_CEC HDMI_CEC
CM_HDMI0_HPD HDMI_HPD
CM_HDMI0_SDA HDMI_DDC_SDA
CM_HDMI0_SCL HDMI_DDC_SCL
HDMI0
USB
CM_USB_D_P D+
CM_USB_D_N D-
USB
CM_USB_OTG
USB_OTG

LAYOUT:

Route MIPI signals as matched length 100 Ohm differential pairs, each signal within a pair should ideally be matched to better than 0.15mm.

Route USB signals as matched length 90 Ohm differential pairs. The P N signals should ideally be matched to 0.15mm.

Route HDMI signals as matched length 100 Ohm differential pairs, each signal within a pair should ideally be matched to better than 0.15mm. Pairs don't typically need any extra matching as they only have to be matched to 25mm.

LAYOUT:

Route Ethernet signals as matched length 100 Ohm differential pairs with suitable clearances. Length matching between pairs should be better than 50mm, so in the typical case no length matching is required. However the signals within a pair need to be length matched, ideally to better than 0.15mm.

Route PCIe signals as matched length 90 Ohm differential pairs with suitable clearances. There is no need to match the lengths between pairs, only the signals within a pair need to be length matched ideally to better than 0.1mm.

LAYOUT:

Impedance matching:
90 Ohm -> PCIe, USB
100 Ohm -> HDMI, Ethernet, MIPI (CSI, DSI)

Mirkotronics	Mirkotronics Aleksandry 3/89, 30-837 Kraków, POLAND	Size B
Title Compute Module 4 (Part #2)		Version V1
Project: Pi4GPU (PiG) Variant: STD_PRO Designer: M. Folejewski File Name: [05] CM4_PART2.SchDoc	RefDes: 100-199 Sheet: 5 / 15 Printed: 08.04.2023	Revision R1

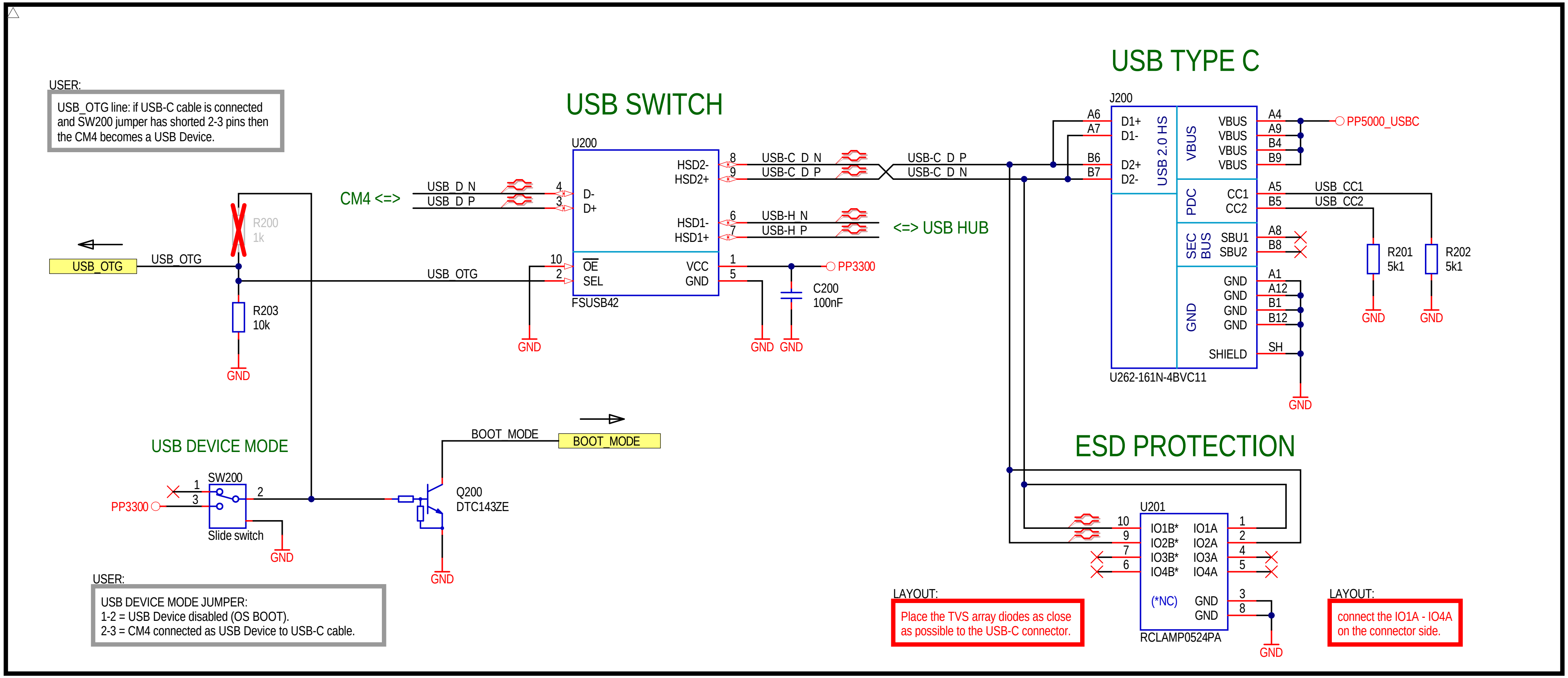
USB SWITCH
USB TYPE C
ESD PROTECTION
USB DEVICE MODE
CM4 <=>
<=> USB HUB
U200
FSUSB42
D-
D+
HSD2-
HSD2+
HSD1-
HSD1+
OE
SEL
VCC
GND
USB_D_N
USB_D_P
USB-C_D_N
USB-C_D_P
USB-H_N
USB-H_P
USB_OTG
PP3300
C200
100nF
GND
R200
1k
R203
10k
J200
U262-161N-4BVC11
USB 2.0 HS
D1+
D1-
D2+
D2-
VBUS
PDC
CC1
CC2
SEC BUS
SBU1
SBU2
SHIELD
A6
A7
B6
B7
A4
A9
B4
B9
A5
B5
A8
B8
A1
A12
B1
B12
SH
PP5000_USBC
USB_CC1
USB_CC2
R201
5k1
R202
5k1
SW200
Slide switch
Q200
DTC143ZE
BOOT_MODE
U201
RCLAMP0524PA
IO1B*
IO2B*
IO3B*
IO4B*
IO1A
IO2A
IO3A
IO4A
(*NC)

USER:

USB_OTG line: if USB-C cable is connected and SW200 jumper has shorted 2-3 pins then the CM4 becomes a USB Device.

USER:

USB DEVICE MODE JUMPER:
1-2 = USB Device disabled (OS BOOT).
2-3 = CM4 connected as USB Device to USB-C cable.

LAYOUT:

Place the TVS array diodes as close as possible to the USB-C connector.

LAYOUT:

connect the IO1A - IO4A on the connector side.

TESTPOINTS (DEBUG)

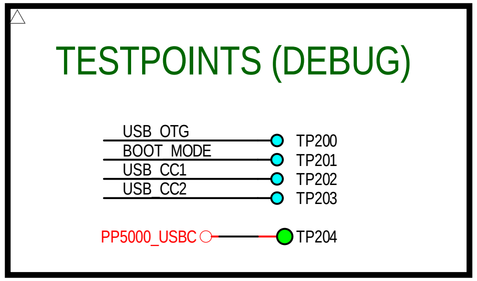
USB_OTG
BOOT_MODE
USB_CC1
USB_CC2
TP200
TP201
TP202
TP203
PP5000_USBC
TP204

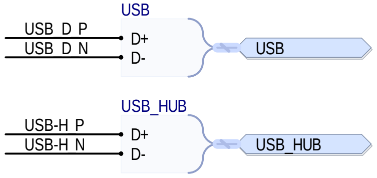
USB
USB_D_P
USB_D_N
D+
D-
USB
USB_HUB
USB-H_P
USB-H_N
D+
D-
USB_HUB

BOM:

USB 3.1 Type C:
Use XKB Connectivity, MPN = U262-161N-4BVC11.
Description: vertical connector, 16 pins, USB 2.0 only, SMD version.

LAYOUT:

Route USB signals as matched length 90 Ohm differential pairs. The P N signals should ideally be matched to 0.15mm.

Mirkotronics
Mirkotronics
Aleksandry 3/89, 30-837 Kraków, POLAND

Size	A4
Title	USB-C interface and USB mux
Version	V1
Project:	Pi4GPU (PiG)
Variant:	STD_PRO
Designer:	M. Folejewski
File Name:	[06] USB_C.SchDoc
RefDes:	200-249
Sheet:	6 / 15
Printed:	08.04.2023
Revision	R1

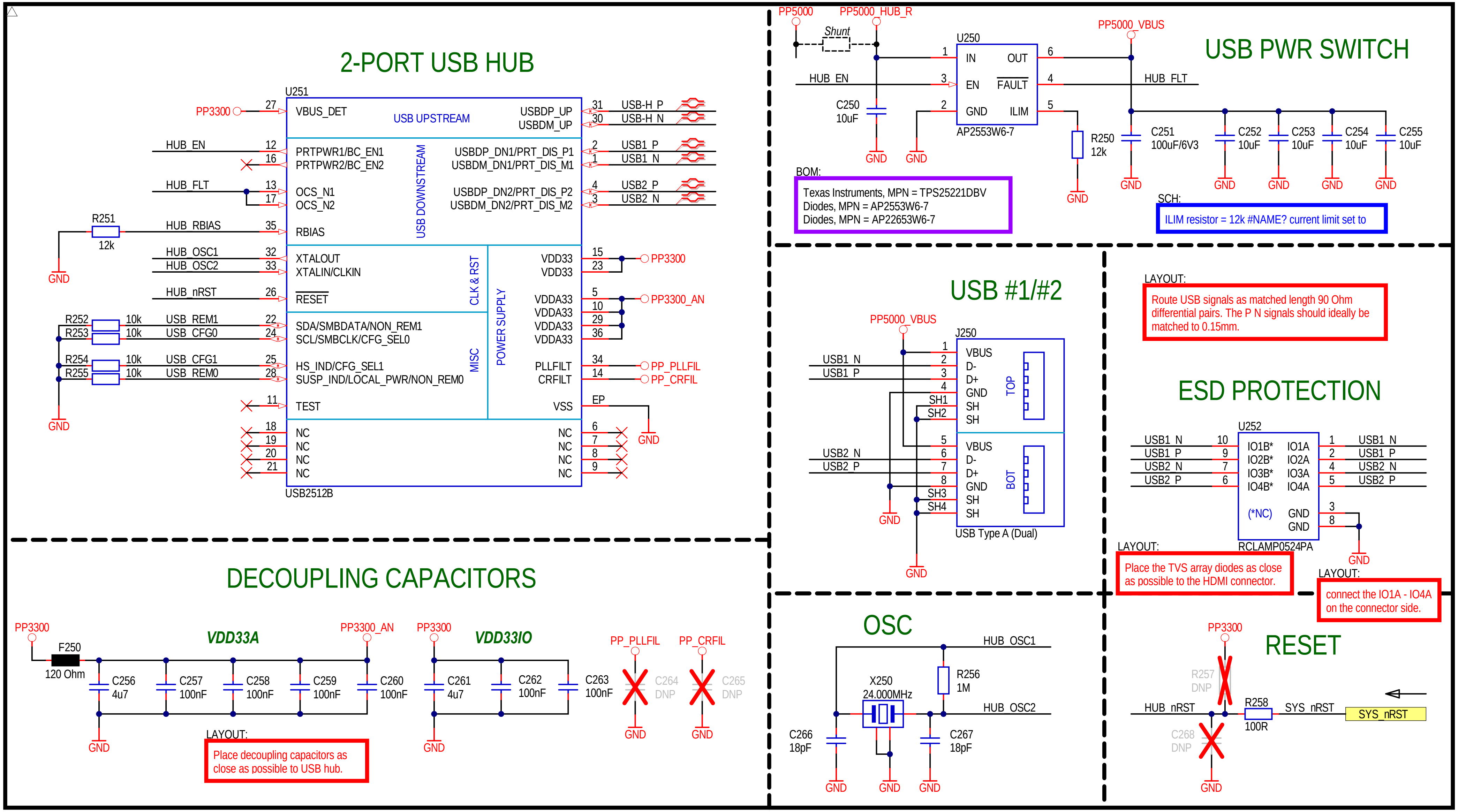
2-PORT USB HUB
U251
USB2512B
USB UPSTREAM
USB DOWNSTREAM
CLK & RST
MISC
POWER SUPPLY
VBUS_DET
USBDP_UP
USBDM_UP
PRTPWR1/BC_EN1
PRTPWR2/BC_EN2
USBDP_DN1/PRT_DIS_P1
USBDM_DN1/PRT_DIS_M1
OCS_N1
OCS_N2
USBDP_DN2/PRT_DIS_P2
USBDM_DN2/PRT_DIS_M2
RBIAS
XTALOUT
XTALIN/CLKIN
RESET
SDA/SMBDATA/NON_REM1
SCL/SMBCLK/CFG_SEL0
HS_IND/CFG_SEL1
SUSP_IND/LOCAL_PWR/NON_REM0
TEST
NC
VDD33
VDDA33
PLLFILT
CRFILT
VSS
EP
PP3300
PP3300_AN
PP_PLLFIL
PP_CRFIL
HUB_EN
HUB_FLT
HUB_RBIAS
HUB_OSC1
HUB_OSC2
HUB_nRST
USB_REM1
USB_CFG0
USB_CFG1
USB_REM0
USB-H_P
USB-H_N
USB1_P
USB1_N
USB2_P
USB2_N
R251 12k
R252 10k
R253 10k
R254 10k
R255 10k
GND
USB PWR SWITCH
PP5000
PP5000_HUB_R
PP5000_VBUS
Shunt
U250
AP2553W6-7
IN
OUT
EN
FAULT
GND
ILIM
C250 10uF
R250 12k
C251 100uF/6V3
C252 10uF
C253 10uF
C254 10uF
C255 10uF
BOM:
SCH:
USB #1/#2
J250
USB Type A (Dual)
VBUS
D-
D+
GND
SH
SH1
SH2
SH3
SH4
TOP
BOT
ESD PROTECTION
U252
RCLAMP0524PA
IO1B*
IO2B*
IO3B*
IO4B*
IO1A
IO2A
IO3A
IO4A
(*NC)
LAYOUT:
DECOUPLING CAPACITORS
VDD33A
VDD33IO
F250 120 Ohm
C256 4u7
C257 100nF
C258 100nF
C259 100nF
C260 100nF
C261 4u7
C262 100nF
C263 100nF
C264 DNP
C265 DNP
OSC
X250 24.000MHz
R256 1M
C266 18pF
C267 18pF
RESET
R257 DNP
R258 100R
C268 DNP
SYS_nRST

Texas Instruments, MPN = TPS25221DBV
Diodes, MPN = AP2553W6-7
Diodes, MPN = AP22653W6-7

ILIM resistor = 12k #NAME? current limit set to

LAYOUT:
Route USB signals as matched length 90 Ohm differential pairs. The P N signals should ideally be matched to 0.15mm.

LAYOUT:
Place the TVS array diodes as close as possible to the HDMI connector.

LAYOUT:
connect the IO1A - IO4A on the connector side.

LAYOUT:
Place decoupling capacitors as close as possible to USB hub.

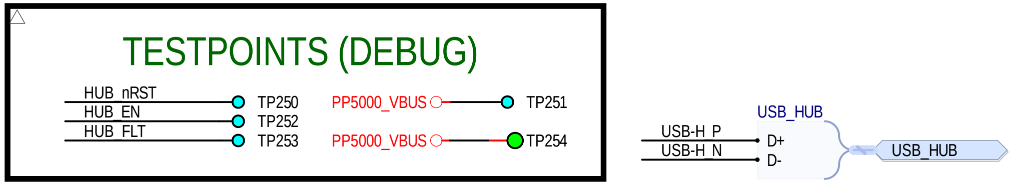
TESTPOINTS (DEBUG)
HUB_nRST
HUB_EN
HUB_FLT
TP250
TP252
TP253
PP5000_VBUS
TP251
TP254
USB_HUB
USB-H_P
USB-H_N
D+
D-

Mirkotronics
Aleksandry 3/89, 30-837 Kraków, POLAND

Title	2-port USB 2.0 hub	Size A4
		Version V1
Project:	Pi4GPU (PiG)	Revision R1
Variant:	STD_PRO	RefDes: 250-299
Designer:	M. Folejewski	Sheet: 7 / 15
File Name:	[07] USB_HUB.SchDoc	Printed: 08.04.2023

PCI Express x4 Edge Connector

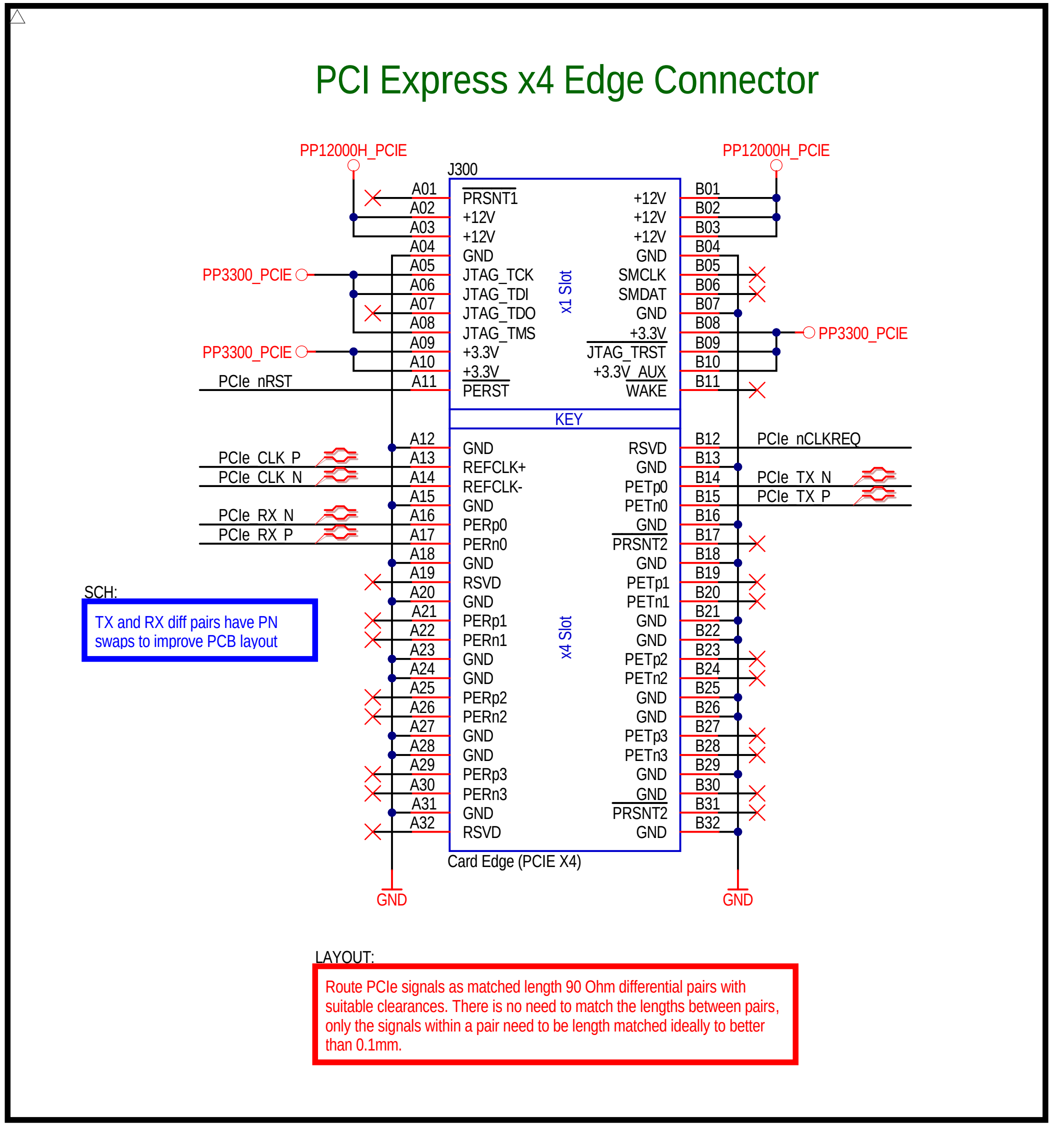
J300
PP12000H_PCIE
PP12000H_PCIE
PP3300_PCIE
PP3300_PCIE
PP3300_PCIE
PCIe_nRST
PCIe_CLK_P
PCIe_CLK_N
PCIe_RX_N
PCIe_RX_P
PCIe_nCLKREQ
PCIe_TX_N
PCIe_TX_P
A01 PRSNT1
A02 +12V
A03 +12V
A04 GND
A05 JTAG_TCK
A06 JTAG_TDI
A07 JTAG_TDO
A08 JTAG_TMS
A09 +3.3V
A10 +3.3V
A11 PERST
KEY
A12 GND
A13 REFCLK+
A14 REFCLK-
A15 GND
A16 PERp0
A17 PERn0
A18 GND
A19 RSVD
A20 GND
A21 PERp1
A22 PERn1
A23 GND
A24 GND
A25 PERp2
A26 PERn2
A27 GND
A28 GND
A29 PERp3
A30 PERn3
A31 GND
A32 RSVD
B01 +12V
B02 +12V
B03 +12V
B04 GND
B05 SMCLK
B06 SMDAT
B07 GND
B08 +3.3V
B09 JTAG_TRST
B10 +3.3V_AUX
B11 WAKE
B12 RSVD
B13 GND
B14 PETp0
B15 PETn0
B16 GND
B17 PRSNT2
B18 GND
B19 PETp1
B20 PETn1
B21 GND
B22 GND
B23 PETp2
B24 PETn2
B25 GND
B26 GND
B27 PETp3
B28 PETn3
B29 GND
B30 GND
B31 PRSNT2
B32 GND
x1 Slot
x4 Slot
Card Edge (PCIE X4)
GND
GND

SCH:

TX and RX diff pairs have PN swaps to improve PCB layout

LAYOUT:

Route PCIe signals as matched length 90 Ohm differential pairs with suitable clearances. There is no need to match the lengths between pairs, only the signals within a pair need to be length matched ideally to better than 0.1mm.

TESTPOINTS (DEBUG)

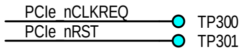
PCIe_nCLKREQ
PCIe_nRST
TP300
TP301

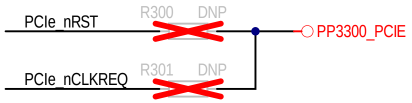
PCIe_nRST
R300 DNP
PP3300_PCIE
PCIe_nCLKREQ
R301 DNP

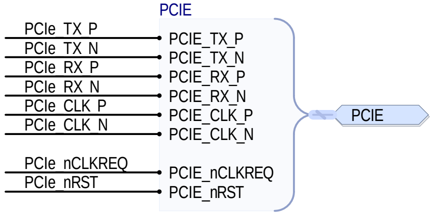
PCIE
PCIe_TX_P
PCIe_TX_N
PCIe_RX_P
PCIe_RX_N
PCIe_CLK_P
PCIe_CLK_N
PCIe_nCLKREQ
PCIe_nRST
PCIE_TX_P
PCIE_TX_N
PCIE_RX_P
PCIE_RX_N
PCIE_CLK_P
PCIE_CLK_N
PCIE_nCLKREQ
PCIE_nRST
PCIE

Mirkotronics

Mirkotronics
Aleksandry 3/89, 30-837 Kraków, POLAND

Size	A4	Version	V1
Title	PCIe x4 edge connector (PCIe x1 only)	Revision	R1
Project:	Pi4GPU (PiG)		
Variant:	STD_PRO	RefDes:	300-399
Designer:	M. Folejewski	Sheet:	8 / 15
File Name:	[08] PCIe.SchDoc	Printed:	08.04.2023

ESD PROTECTION

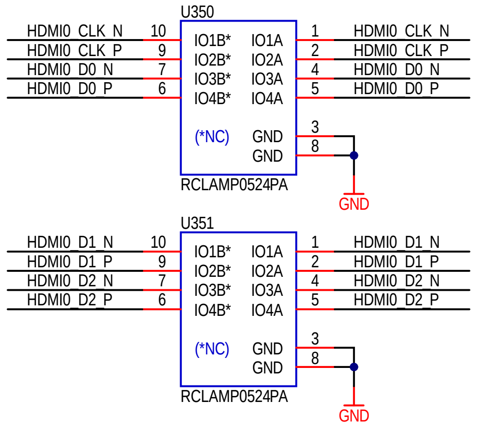
U350
HDMI0_CLK_N 10 IO1B* IO1A 1 HDMI0_CLK_N
HDMI0_CLK_P 9 IO2B* IO2A 2 HDMI0_CLK_P
HDMI0_D0_N 7 IO3B* IO3A 4 HDMI0_D0_N
HDMI0_D0_P 6 IO4B* IO4A 5 HDMI0_D0_P
(*NC) GND 3
GND 8
GND
RCLAMP0524PA
U351
HDMI0_D1_N 10 IO1B* IO1A 1 HDMI0_D1_N
HDMI0_D1_P 9 IO2B* IO2A 2 HDMI0_D1_P
HDMI0_D2_N 7 IO3B* IO3A 4 HDMI0_D2_N
HDMI0_D2_P 6 IO4B* IO4A 5 HDMI0_D2_P
(*NC) GND 3
GND 8
GND
RCLAMP0524PA

LAYOUT:

Place the TVS array diodes as close as possible to the HDMI connector.

LAYOUT:

connect the IO1A - IO4A on the connector side.

HDMI #0 (TYPE A)

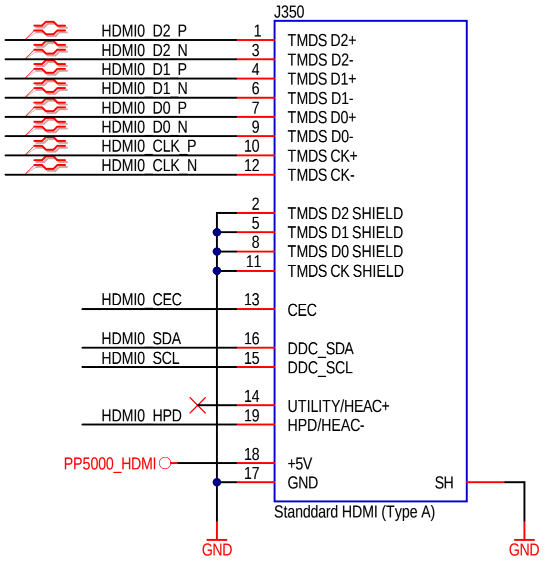
J350
HDMI0_D2_P 1 TMDS D2+
HDMI0_D2_N 3 TMDS D2-
HDMI0_D1_P 4 TMDS D1+
HDMI0_D1_N 6 TMDS D1-
HDMI0_D0_P 7 TMDS D0+
HDMI0_D0_N 9 TMDS D0-
HDMI0_CLK_P 10 TMDS CK+
HDMI0_CLK_N 12 TMDS CK-
2 TMDS D2 SHIELD
5 TMDS D1 SHIELD
8 TMDS D0 SHIELD
11 TMDS CK SHIELD
HDMI0_CEC 13 CEC
HDMI0_SDA 16 DDC_SDA
HDMI0_SCL 15 DDC_SCL
14 UTILITY/HEAC+
HDMI0_HPD 19 HPD/HEAC-
PP5000_HDMI 18 +5V
17 GND
SH
GND
GND
Standdard HDMI (Type A)

BOM:

HDMI #0 connector:
Wurth Elektronik, MPN = 685 119 134 923
BOOMELE, MPN = HDMI-001
Description: Type A (Standard), 19 pins, 0.50mm pitch, horizontal, SMD.

LAYOUT:

Route HDMI signals as matched length 100 Ohm differential pairs, each signal within a pair should ideally be matched to better than 0.15mm. Pairs don't typically need any extra matching as they only have to be matched to 25mm.

TESTPOINTS (DEBUG)

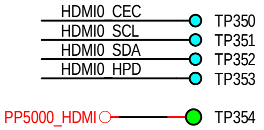
HDMI0_CEC TP350
HDMI0_SCL TP351
HDMI0_SDA TP352
HDMI0_HPD TP353
PP5000_HDMI TP354

5V POWER SWITCH

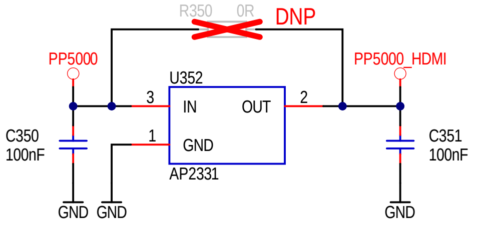
R350 0R
DNP
PP5000
PP5000_HDMI
U352
3 IN OUT 2
1 GND
AP2331
C350
100nF
C351
100nF
GND
GND
GND

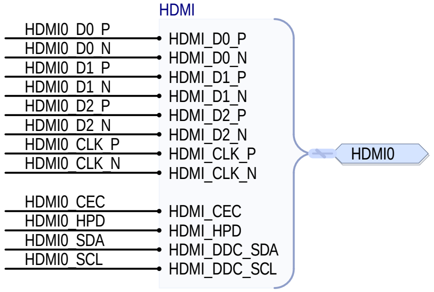
HDMI
HDMI0_D0_P HDMI_D0_P
HDMI0_D0_N HDMI_D0_N
HDMI0_D1_P HDMI_D1_P
HDMI0_D1_N HDMI_D1_N
HDMI0_D2_P HDMI_D2_P
HDMI0_D2_N HDMI_D2_N
HDMI0_CLK_P HDMI_CLK_P
HDMI0_CLK_N HDMI_CLK_N
HDMI0_CEC HDMI_CEC
HDMI0_HPD HDMI_HPD
HDMI0_SDA HDMI_DDC_SDA
HDMI0_SCL HDMI_DDC_SCL
HDMI0

Mirkotronics
Mirkotronics
Aleksandry 3/89, 30-837 Kraków, POLAND
Size A4
Title
HDMI Interface
Version V1
Revision R1
Project: Pi4GPU (PiG)
Variant: STD_PRO
Designer: M. Folejewski
File Name: [09] HDMI.SchDoc
RefDes: 400-449
Sheet: 9 / 15
Printed: 08.04.2023

ESD PROTECTION

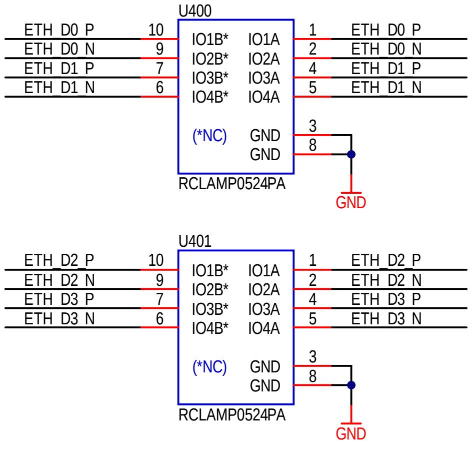
U400
ETH_D0_P 10 IO1B* IO1A 1 ETH_D0_P
ETH_D0_N 9 IO2B* IO2A 2 ETH_D0_N
ETH_D1_P 7 IO3B* IO3A 4 ETH_D1_P
ETH_D1_N 6 IO4B* IO4A 5 ETH_D1_N
(*NC) GND 3
GND 8
RCLAMP0524PA
GND
U401
ETH_D2_P 10 IO1B* IO1A 1 ETH_D2_P
ETH_D2_N 9 IO2B* IO2A 2 ETH_D2_N
ETH_D3_P 7 IO3B* IO3A 4 ETH_D3_P
ETH_D3_N 6 IO4B* IO4A 5 ETH_D3_N
(*NC) GND 3
GND 8
RCLAMP0524PA
GND

LAYOUT:

connect IO1A - IO4A on the connector side.

LAYOUT:

Place TVS array diodes as close as possible to RJ45 connector.

100/1000M ETHERNET

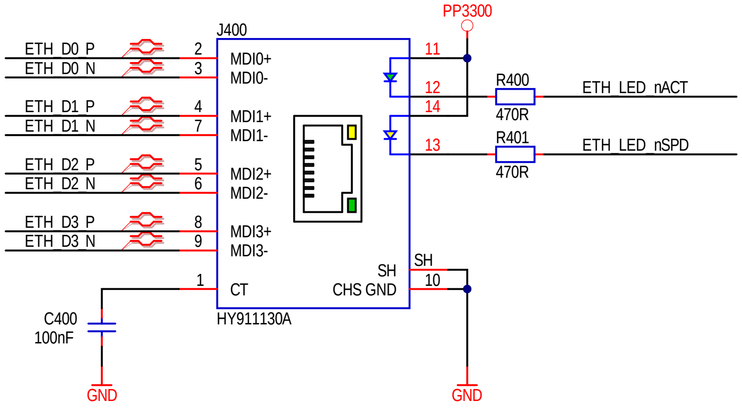
PP3300
J400
ETH_D0_P 2 MDI0+
ETH_D0_N 3 MDI0-
ETH_D1_P 4 MDI1+
ETH_D1_N 7 MDI1-
ETH_D2_P 5 MDI2+
ETH_D2_N 6 MDI2-
ETH_D3_P 8 MDI3+
ETH_D3_N 9 MDI3-
1 CT
SH
CHS GND
SH
10
11
12
14
13
R400
470R
ETH_LED_nACT
R401
470R
ETH_LED_nSPD
HY911130A
C400
100nF
GND
GND

LAYOUT:

Route Ethernet signals as matched length 100 Ohm differential pairs with suitable clearances. Length matching between pairs should be better than 50mm, so in the typical case no length matching is required. However the signals within a pair need to be length matched, ideally to better than 0.15mm.

BOM:

RJ45 -> compatible connectors:
HanRun, MPN = HR911130A (HY911130A)
Link-PP, MPN = LPJG0806FBNL
Description: 100/1000M RJ45, Tab-down, G/Y LEDs

TESTPOINTS (DEBUG)

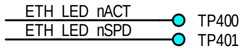
ETH_LED_nACT
ETH_LED_nSPD
TP400
TP401

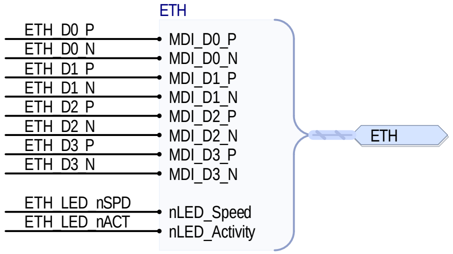
ETH
ETH_D0_P MDI_D0_P
ETH_D0_N MDI_D0_N
ETH_D1_P MDI_D1_P
ETH_D1_N MDI_D1_N
ETH_D2_P MDI_D2_P
ETH_D2_N MDI_D2_N
ETH_D3_P MDI_D3_P
ETH_D3_N MDI_D3_N
ETH_LED_nSPD nLED_Speed
ETH_LED_nACT nLED_Activity
ETH

Mirkotronics
Mirkotronics
Aleksandry 3/89, 30-837 Kraków, POLAND
Size A4
Title
100/1000M Ethernet interface
Version V1
Project: Pi4GPU (PiG)
Variant: STD_PRO
Designer: M. Folejewski
File Name: [10] Ethernet.SchDoc
RefDes: 500-599
Sheet: 10 / 15
Printed: 08.04.2023
Revision R1

MICRO SD CARD

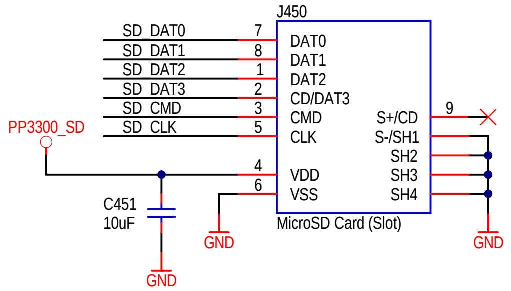
J450
SD_DAT0 7 DAT0
SD_DAT1 8 DAT1
SD_DAT2 1 DAT2
SD_DAT3 2 CD/DAT3
SD_CMD 3 CMD
SD_CLK 5 CLK
S+/CD 9
S-/SH1
SH2
SH3
SH4
PP3300_SD
4 VDD
6 VSS
C451
10uF
MicroSD Card (Slot)
GND
GND
GND

SCH:

Used MicroSD card slot: Hmax = 2.00 mm

USER:

SD Card only for CM4 Lite module with no on-board Flash memory chip (eMMC).

BOM:

MicroSD slot -> compatible components:
GCT, MPN = MEM2055-00-190-01-A
SOFNG, MPN = TF-015
HOAUC, MPN = HYC77-TF09-200
XUNPU, MPN = TF-115

PWR SWITCH

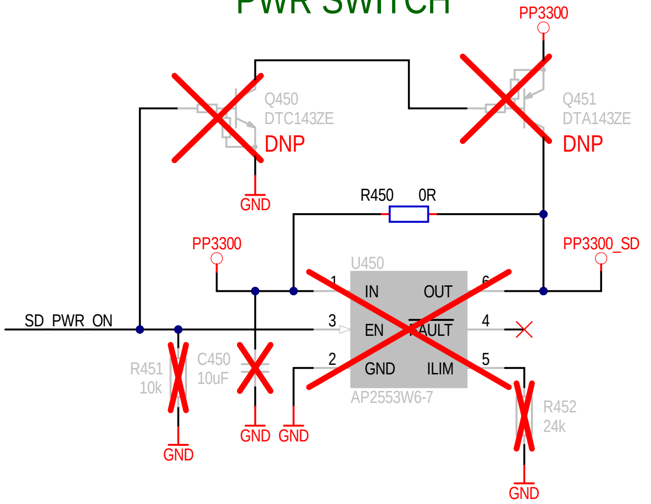
PP3300
Q450
DTC143ZE
DNP
Q451
DTA143ZE
DNP
GND
R450 0R
PP3300
PP3300_SD
U450
1 IN
OUT 6
SD_PWR_ON
3 EN
FAULT 4
2 GND
ILIM 5
AP2553W6-7
R451
10k
C450
10uF
R452
24k
GND
GND
GND
GND
GND

BOM:

Texas Instruments, MPN = TPS25221DBV
Diodes, MPN = AP2553W6-7
Diodes, MPN = AP22653W6-7

SCH:

ILIM resistor = 24k #NAME?
current limit set to 1.05A

TESTPOINTS (DEBUG)

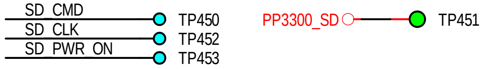
SD_CMD
SD_CLK
SD_PWR_ON
TP450
TP452
TP453
PP3300_SD
TP451

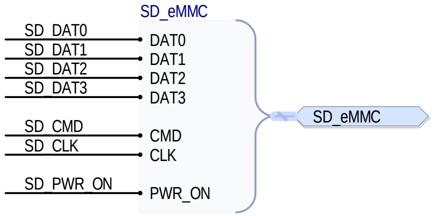
SD_eMMC
SD_DAT0
SD_DAT1
SD_DAT2
SD_DAT3
SD_CMD
SD_CLK
SD_PWR_ON
DAT0
DAT1
DAT2
DAT3
CMD
CLK
PWR_ON
SD_eMMC

Mirkotronics
Mirkotronics
Aleksandry 3/89, 30-837 Kraków, POLAND

Size A4

Title
MicroSD slot

Version V1

Project: Pi4GPU (PiG)
Variant: STD_PRO
Designer: M. Folejewski
File Name: [11] SD.SchDoc

RefDes: 600-699
Sheet: 11 / 15
Printed: 08.04.2023

Revision R1

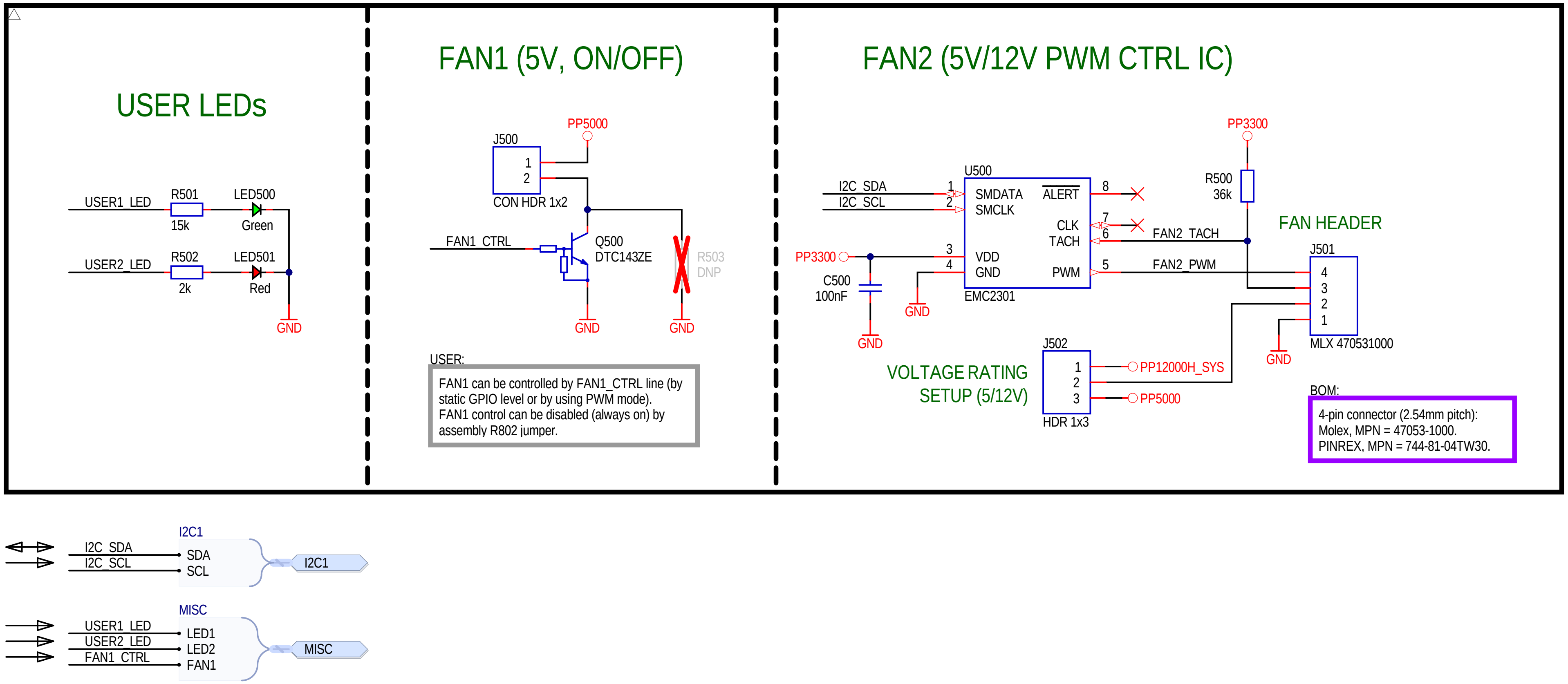
USER LEDs
USER1_LED
R501
15k
LED500
Green
USER2_LED
R502
2k
LED501
Red
GND
FAN1 (5V, ON/OFF)
PP5000
J500
1
2
CON HDR 1x2
FAN1_CTRL
Q500
DTC143ZE
R503
DNP
GND
GND
FAN2 (5V/12V PWM CTRL IC)
U500
I2C_SDA
I2C_SCL
1
2
SMDATA
SMCLK
ALERT
8
CLK
7
TACH
6
PP3300
3
4
VDD
GND
PWM
5
EMC2301
C500
100nF
GND
GND
PP3300
R500
36k
FAN2_TACH
FAN2_PWM
FAN HEADER
J501
4
3
2
1
MLX 470531000
GND
J502
1
2
3
HDR 1x3
PP12000H_SYS
PP5000
VOLTAGE RATING
SETUP (5/12V)
I2C1
I2C_SDA
I2C_SCL
SDA
SCL
I2C1
MISC
USER1_LED
USER2_LED
FAN1_CTRL
LED1
LED2
FAN1
MISC

USER:

FAN1 can be controlled by FAN1_CTRL line (by static GPIO level or by using PWM mode).
FAN1 control can be disabled (always on) by assembly R802 jumper.

BOM:

4-pin connector (2.54mm pitch):
Molex, MPN = 47053-1000.
PINREX, MPN = 744-81-04TW30.

Mirkotronics
Mirkotronics
Aleksandry 3/89, 30-837 Kraków, POLAND
Size A4
Title
MISC
Version V1
Revision R1
Project: Pi4GPU (PiG)
Variant: STD_PRO
Designer: M. Folejewski
File Name: [12] MISC.SchDoc
RefDes: 800-899
Sheet: 12 / 15
Printed: 08.04.2023

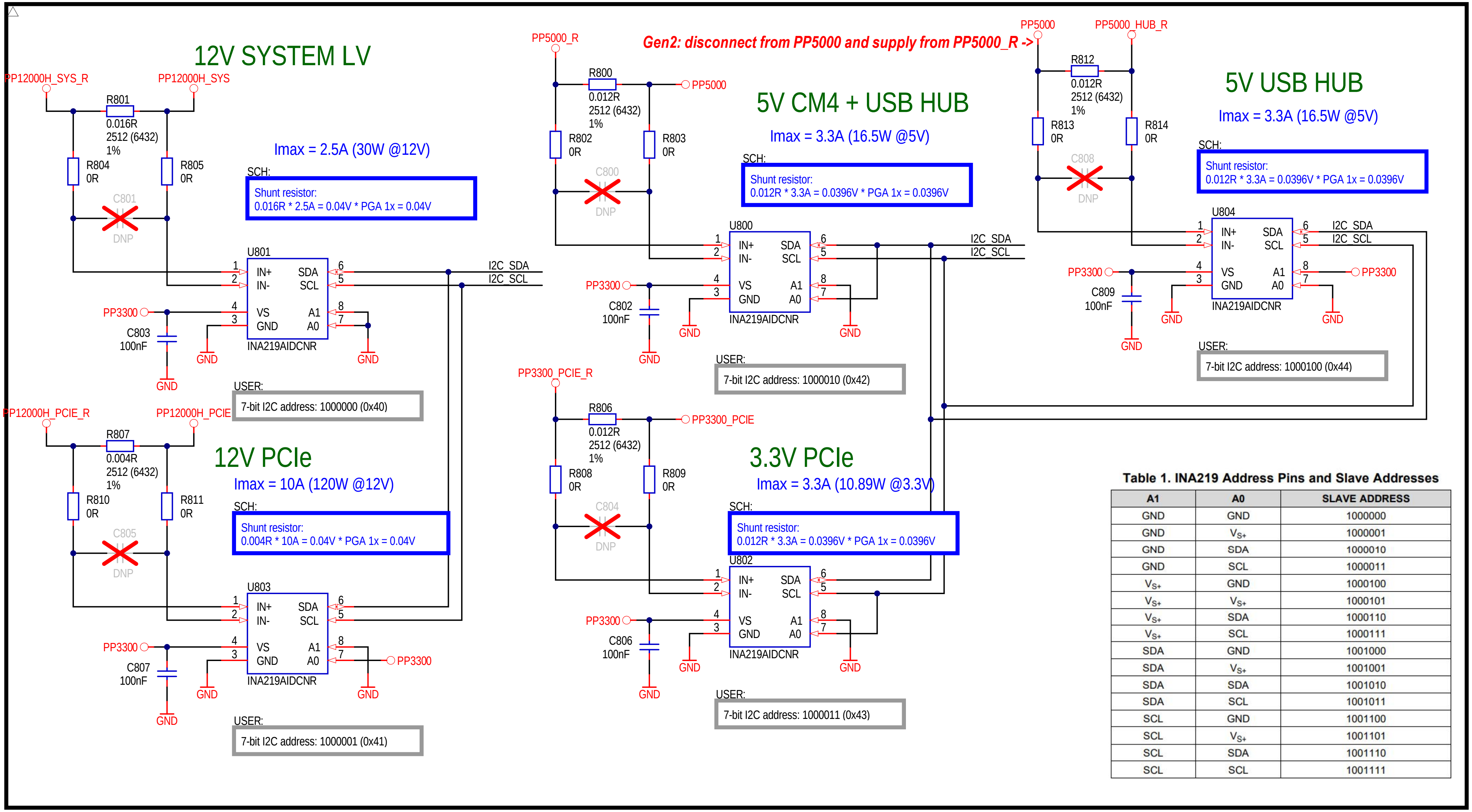
12V SYSTEM LV
PP12000H_SYS_R
PP12000H_SYS
R801
0.016R
2512 (6432)
1%
R804
0R
R805
0R
C801
DNP
Imax = 2.5A (30W @12V)
SCH:
Shunt resistor:
0.016R * 2.5A = 0.04V * PGA 1x = 0.04V
U801
IN+
IN-
SDA
SCL
VS
GND
A1
A0
INA219AIDCNR
I2C_SDA
I2C_SCL
PP3300
C803
100nF
GND
USER:
7-bit I2C address: 1000000 (0x40)
PP12000H_PCIE_R
PP12000H_PCIE
R807
0.004R
2512 (6432)
1%
R810
0R
R811
0R
C805
DNP
12V PCIe
Imax = 10A (120W @12V)
SCH:
Shunt resistor:
0.004R * 10A = 0.04V * PGA 1x = 0.04V
U803
INA219AIDCNR
PP3300
C807
100nF
GND
USER:
7-bit I2C address: 1000001 (0x41)
PP5000_R
Gen2: disconnect from PP5000 and supply from PP5000_R ->
R800
0.012R
2512 (6432)
1%
PP5000
R802
0R
R803
0R
C800
DNP
5V CM4 + USB HUB
Imax = 3.3A (16.5W @5V)
SCH:
Shunt resistor:
0.012R * 3.3A = 0.0396V * PGA 1x = 0.0396V
U800
INA219AIDCNR
I2C_SDA
I2C_SCL
PP3300
C802
100nF
GND
USER:
7-bit I2C address: 1000010 (0x42)
PP3300_PCIE_R
R806
0.012R
2512 (6432)
1%
PP3300_PCIE
R808
0R
R809
0R
C804
DNP
3.3V PCIe
Imax = 3.3A (10.89W @3.3V)
SCH:
Shunt resistor:
0.012R * 3.3A = 0.0396V * PGA 1x = 0.0396V
U802
INA219AIDCNR
PP3300
C806
100nF
GND
USER:
7-bit I2C address: 1000011 (0x43)
PP5000
PP5000_HUB_R
R812
0.012R
2512 (6432)
1%
R813
0R
R814
0R
C808
DNP
5V USB HUB
Imax = 3.3A (16.5W @5V)
SCH:
Shunt resistor:
0.012R * 3.3A = 0.0396V * PGA 1x = 0.0396V
U804
INA219AIDCNR
I2C_SDA
I2C_SCL
PP3300
C809
100nF
GND
USER:
7-bit I2C address: 1000100 (0x44)

Table 1. INA219 Address Pins and Slave Addresses

A1	A0	SLAVE ADDRESS
GND	GND	1000000
GND	V_{S+}	1000001
GND	SDA	1000010
GND	SCL	1000011
V_{S+}	GND	1000100
V_{S+}	V_{S+}	1000101
V_{S+}	SDA	1000110
V_{S+}	SCL	1000111
SDA	GND	1001000
SDA	V_{S+}	1001001
SDA	SDA	1001010
SDA	SCL	1001011
SCL	GND	1001100
SCL	V_{S+}	1001101
SCL	SDA	1001110
SCL	SCL	1001111

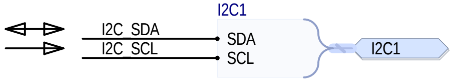
I2C1
I2C_SDA
I2C_SCL
SDA
SCL
I2C1

Mirkotronics
Aleksandry 3/89, 30-837 Kraków, POLAND

Size: A4

Title: Measurement sensors

Version: V1

Revision: R1

Project: Pi4GPU (PiG)
Variant: STD_PRO
Designer: M. Folejewski
File Name: [15] Sensors.SchDoc
RefDes: 900-949
Sheet: 13 / 15
Printed: 08.04.2023

+3.3V @3A POWER SUPPLY (FOR PCIE ONLY)

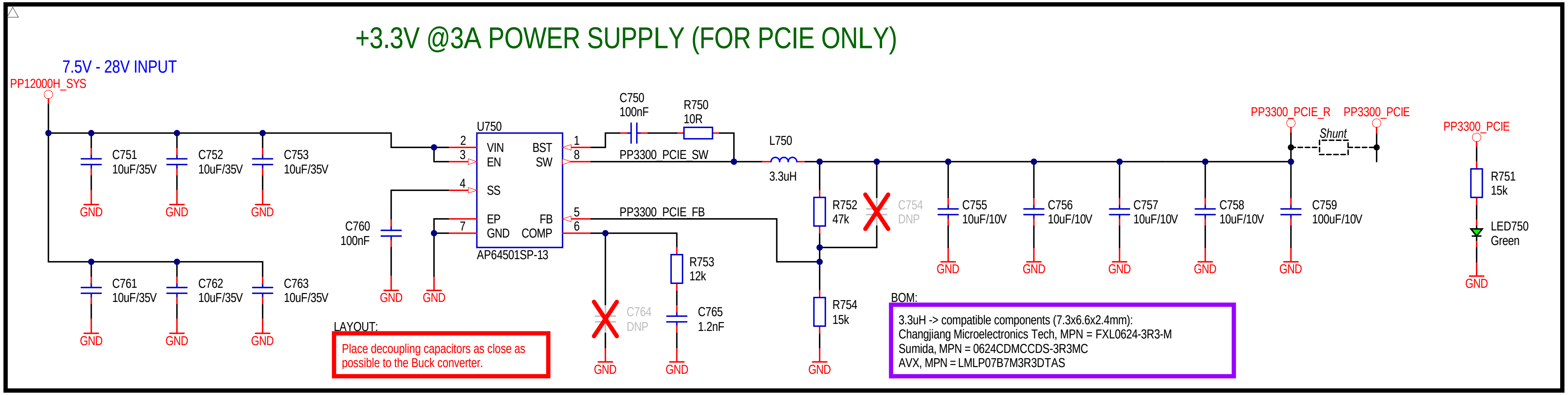
7.5V - 28V INPUT
PP12000H_SYS
C751 10uF/35V
C752 10uF/35V
C753 10uF/35V
C761 10uF/35V
C762 10uF/35V
C763 10uF/35V
C760 100nF
U750
VIN
EN
SS
EP
GND
BST
SW
FB
COMP
AP64501SP-13
C750 100nF
R750 10R
PP3300_PCIE_SW
PP3300_PCIE_FB
L750 3.3uH
R752 47k
C754 DNP
R753 12k
C764 DNP
C765 1.2nF
R754 15k
C755 10uF/10V
C756 10uF/10V
C757 10uF/10V
C758 10uF/10V
C759 100uF/10V
PP3300_PCIE_R
PP3300_PCIE
Shunt
R751 15k
LED750 Green
GND

LAYOUT:

Place decoupling capacitors as close as possible to the Buck converter.

BOM:

3.3uH -> compatible components (7.3x6.6x2.4mm):
Changjiang Microelectronics Tech, MPN = FXL0624-3R3-M
Sumida, MPN = 0624CDMCCDS-3R3MC
AVX, MPN = LMLP07B7M3R3DTAS

+5V @3A POWER SUPPLY

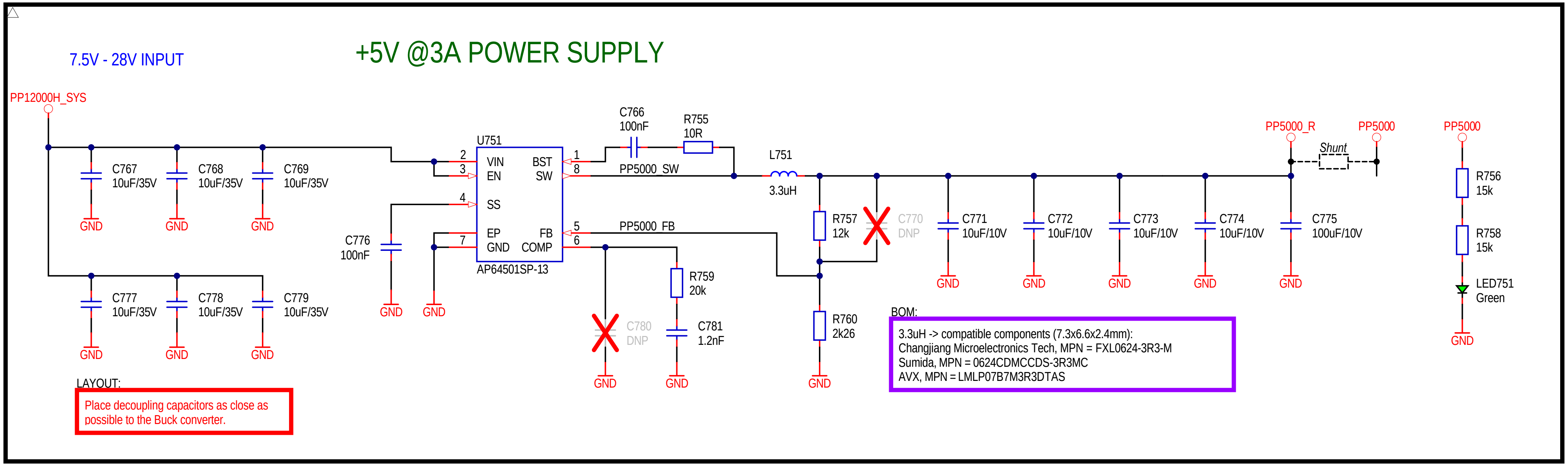
7.5V - 28V INPUT
PP12000H_SYS
C767 10uF/35V
C768 10uF/35V
C769 10uF/35V
C777 10uF/35V
C778 10uF/35V
C779 10uF/35V
C776 100nF
U751
VIN
EN
SS
EP
GND
BST
SW
FB
COMP
AP64501SP-13
C766 100nF
R755 10R
PP5000_SW
PP5000_FB
L751 3.3uH
R757 12k
C770 DNP
R759 20k
C780 DNP
C781 1.2nF
R760 2k26
C771 10uF/10V
C772 10uF/10V
C773 10uF/10V
C774 10uF/10V
C775 100uF/10V
PP5000_R
PP5000
Shunt
R756 15k
R758 15k
LED751 Green
GND

LAYOUT:

Place decoupling capacitors as close as possible to the Buck converter.

BOM:

3.3uH -> compatible components (7.3x6.6x2.4mm):
Changjiang Microelectronics Tech, MPN = FXL0624-3R3-M
Sumida, MPN = 0624CDMCCDS-3R3MC
AVX, MPN = LMLP07B7M3R3DTAS

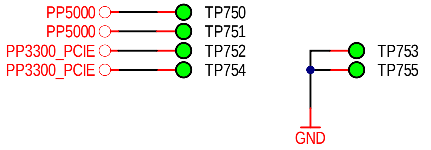
PP5000
PP5000
PP3300_PCIE
PP3300_PCIE
TP750
TP751
TP752
TP754
TP753
TP755
GND

Mirkotronics
Mirkotronics
Aleksandry 3/89, 30-837 Kraków, POLAND
Size A4
Title
Power supply
Version V1
Project: Pi4GPU (PiG)
Variant: STD_PRO
Designer: M. Folejewski
File Name: [14] PWR2.SchDoc
RefDes: 900-949
Sheet: 13 / 15
Printed: 08.04.2023
Revision R1

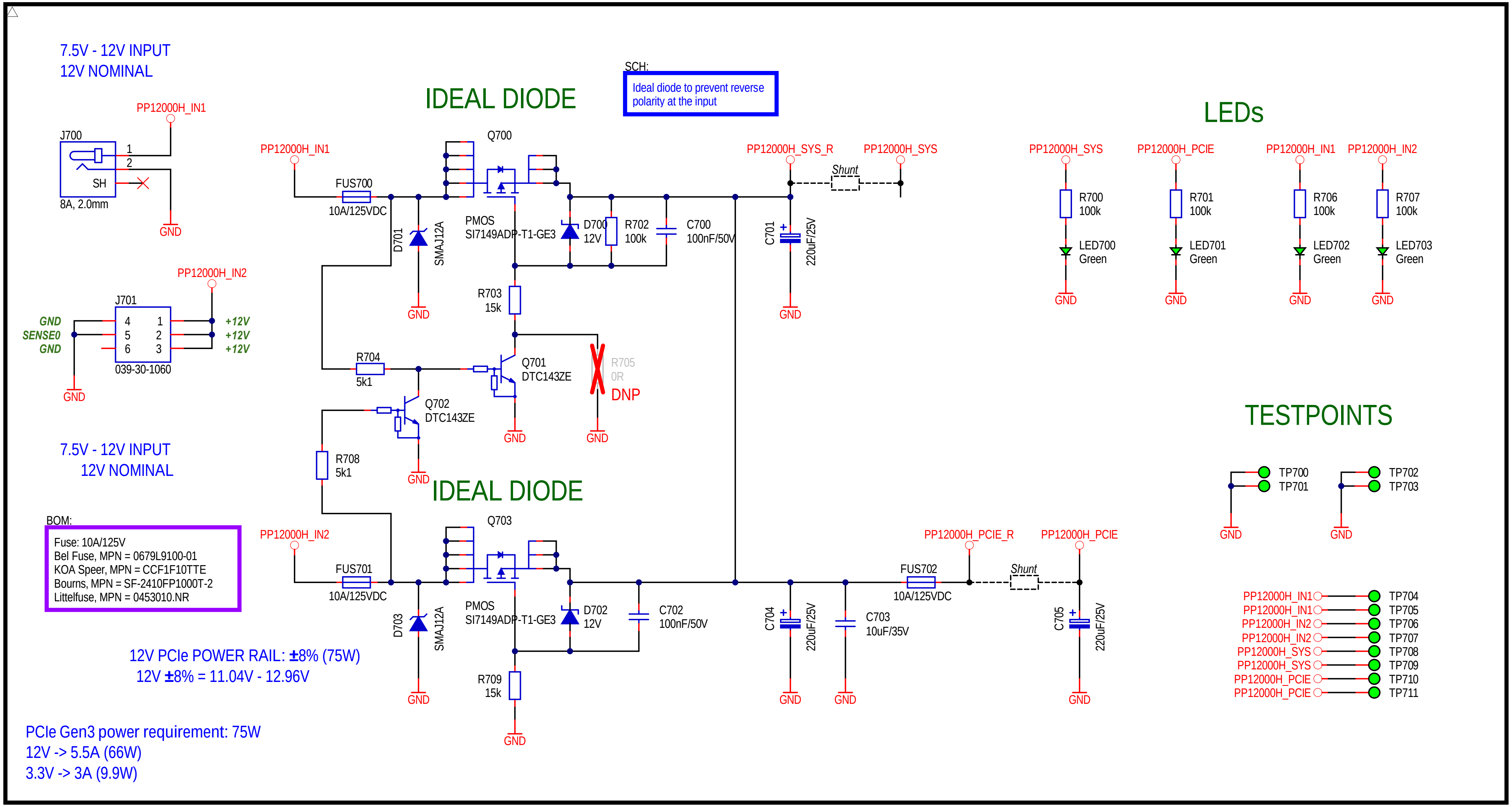
IDEAL DIODE
LEDs
TESTPOINTS
IDEAL DIODE
J700
1
2
SH
8A, 2.0mm
PP12000H_IN1
GND
J701
4
5
6
1
2
3
039-30-1060
GND
SENSE0
GND
+12V
+12V
+12V
PP12000H_IN2
FUS700
10A/125VDC
D701
SMAJ12A
Q700
PMOS
SI7149ADP-T1-GE3
D700
12V
R702
100k
C700
100nF/50V
R703
15k
R704
5k1
Q701
DTC143ZE
R705
0R
DNP
Q702
DTC143ZE
R708
5k1
PP12000H_SYS_R
PP12000H_SYS
Shunt
C701
220uF/25V
FUS701
10A/125VDC
D703
SMAJ12A
Q703
PMOS
SI7149ADP-T1-GE3
D702
12V
C702
100nF/50V
R709
15k
C704
220uF/25V
C703
10uF/35V
FUS702
10A/125VDC
PP12000H_PCIE_R
PP12000H_PCIE
Shunt
C705
220uF/25V
PP12000H_SYS
R700
100k
LED700
Green
PP12000H_PCIE
R701
100k
LED701
Green
PP12000H_IN1
R706
100k
LED702
Green
PP12000H_IN2
R707
100k
LED703
Green
TP700
TP701
TP702
TP703
PP12000H_IN1
PP12000H_IN1
PP12000H_IN2
PP12000H_IN2
PP12000H_SYS
PP12000H_SYS
PP12000H_PCIE
PP12000H_PCIE
TP704
TP705
TP706
TP707
TP708
TP709
TP710
TP711
GND

7.5V - 12V INPUT
12V NOMINAL

SCH:
Ideal diode to prevent reverse
polarity at the input

7.5V - 12V INPUT
12V NOMINAL

BOM:
Fuse: 10A/125V
Bel Fuse, MPN = 0679L9100-01
KOA Speer, MPN = CCF1F10TTE
Bourns, MPN = SF-2410FP1000T-2
Littelfuse, MPN = 0453010.NR

12V PCIe POWER RAIL: ±8% (75W)
12V ±8% = 11.04V - 12.96V

PCIe Gen3 power requirement: 75W
12V -> 5.5A (66W)
3.3V -> 3A (9.9W)

Mirkotronics

Mirkotronics
Aleksandry 3/89, 30-837 Kraków, POLAND

Size: A4

Title: Power supply

Version: V1

Project: Pi4GPU (PiG)
Variant: STD_PRO
Designer: M. Folejewski
File Name: [13] PWR1.SchDoc

RefDes: 900-949
Sheet: 13 / 15
Printed: 08.04.2023

Revision: R1

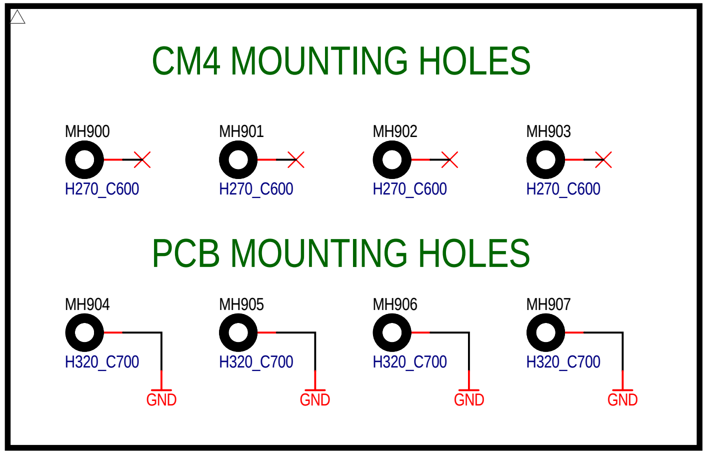
CM4 MOUNTING HOLES
MH900
H270_C600
MH901
H270_C600
MH902
H270_C600
MH903
H270_C600
PCB MOUNTING HOLES
MH904
H320_C700
GND
MH905
H320_C700
GND
MH906
H320_C700
GND
MH907
H320_C700
GND

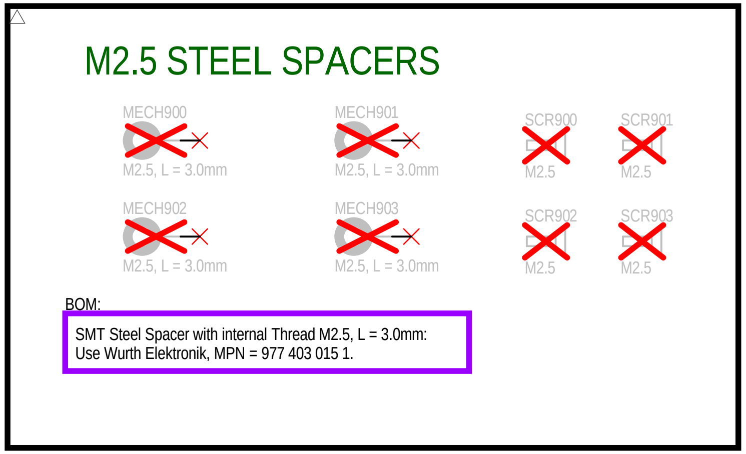
M2.5 STEEL SPACERS
MECH900
M2.5, L = 3.0mm
MECH901
M2.5, L = 3.0mm
SCR900
M2.5
SCR901
M2.5
MECH902
M2.5, L = 3.0mm
MECH903
M2.5, L = 3.0mm
SCR902
M2.5
SCR903
M2.5
BOM:

SMT Steel Spacer with internal Thread M2.5, L = 3.0mm:
Use Wurth Elektronik, MPN = 977 403 015 1.

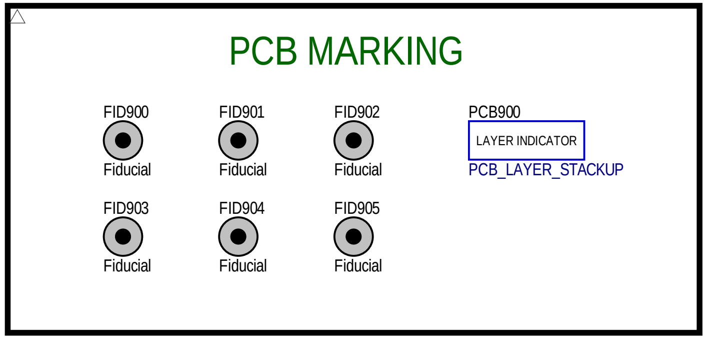
PCB MARKING
FID900
Fiducial
FID901
Fiducial
FID902
Fiducial
PCB900
LAYER INDICATOR
PCB_LAYER_STACKUP
FID903
Fiducial
FID904
Fiducial
FID905
Fiducial

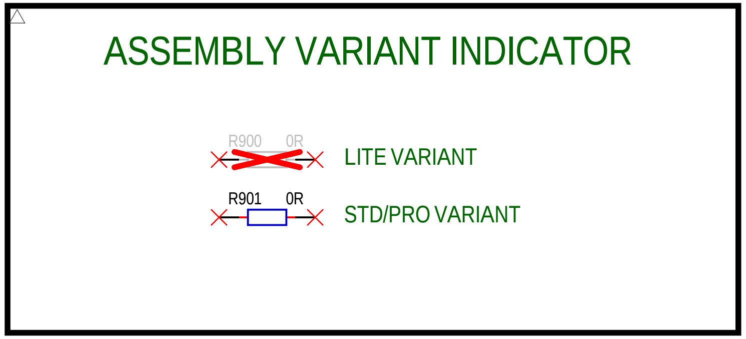
ASSEMBLY VARIANT INDICATOR
R900 0R
LITE VARIANT
R901 0R
STD/PRO VARIANT

Mirkotronics
Aleksandry 3/89, 30-837 Kraków, POLAND

Size	A4
Title	PCB marking & mechanical parts
Version	V1
Project:	Pi4GPU (PiG)
Variant:	STD_PRO
Designer:	M. Folejewski
File Name:	[16] PCB_Mech.SchDoc
RefDes:	950-999
Sheet:	14 / 15
Printed:	08.04.2023
Revision	R1

Hardware changelog

2022.10.27:
- project has started;
- imported schematics from existing designs;

2022.10.29:
- schematic update, minor changes;

2022.10.31:
- PCB shape according to PCIe standard;
- initial component placement of the front connectors;
- minor changes;

2022.11.02:
- added DC barrel jack;
- schematic: power supply update;

2022.11.03:
- component placement of the front connectors;
- microsd card: updated PCB edge;
- RefDes updated;

2022.11.09:
- power supply circuit created;
- added EC schematic page;
- minor changes;

2022.11.10:
- minor changes;
- RefDes updated;
- power supply circuit updated;

2022.11.14:
- Sensors: schematic circuit designed;

2022.11.15:
- PCB layout and component placement;

2022.11.16:
- PCB layout and component placement;

2022.11.17:
- PCB layout and component placement;

2022.11.18:
- PCB layout and component placement;

2022.11.21:
- PCB layout;

2022.11.22:
- PCB layout;

2022.11.23:
- PCB layout;

2022.11.24:
- PCB layout;

2022.11.25:
- PCB layout;

2022.11.26:
- PCB layout;

2022.11.27:
- PCB layout;

2022.11.29:
- Project released (V1/R1);

2022.12.03:
- Block diagram updated;

2023.04.08:
- minor changes (title block);

Mirkotronics

Mirkotronics
Aleksandry 3/89, 30-837 Kraków, POLAND

Size
A4

Title
Hardware changelog

Version
V1

Revision
R1

Project: Pi4GPU (PiG)
Variant: STD_PRO
Designer: M. Folejewski
File Name: [17] Changelog.SchDoc
RefDes: -
Sheet: 15 / 15
Printed: 08.04.2023