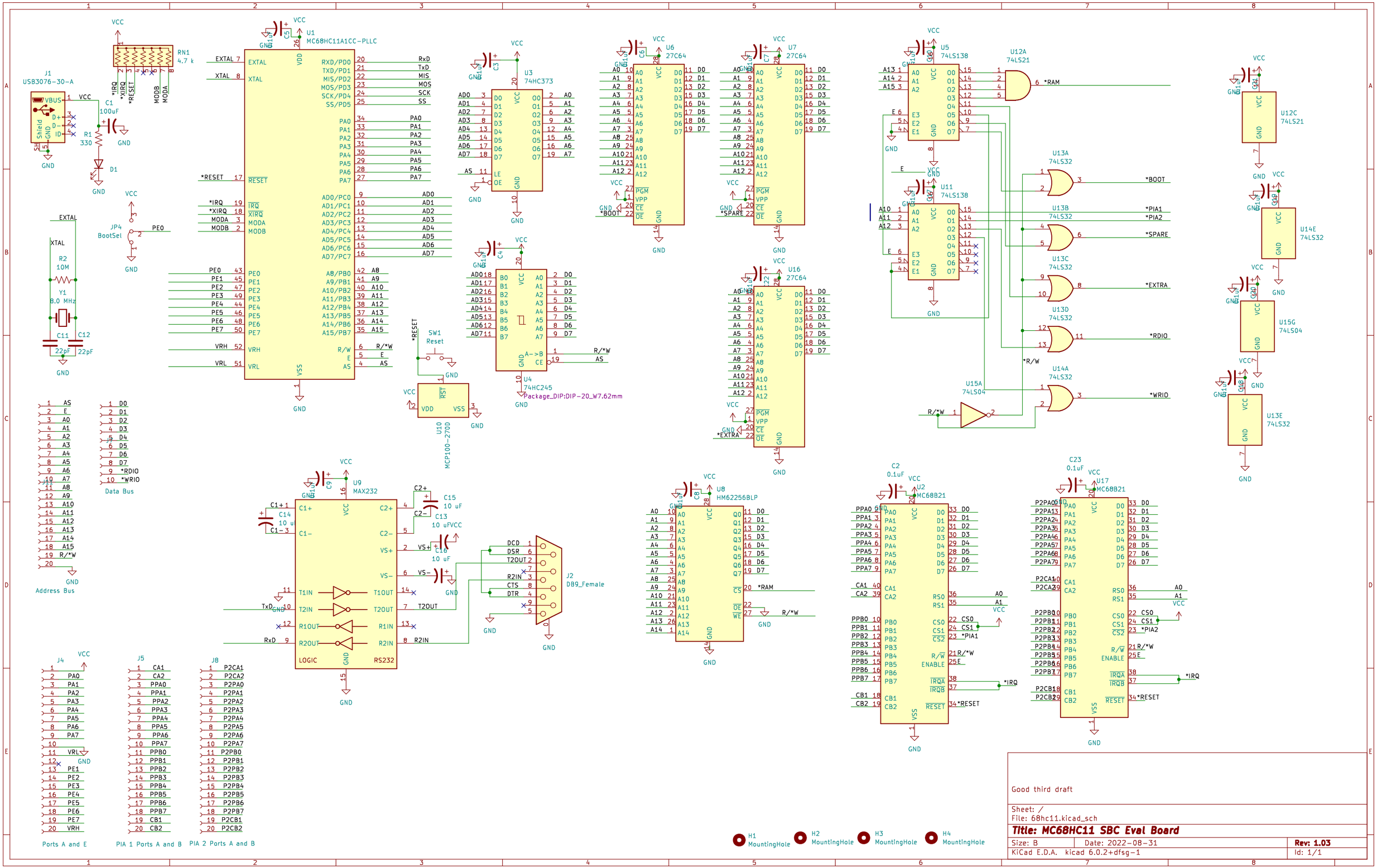

Good third draft

Sheet: /
File: 68hc11.kicad_sch

Title: MC68HC11 SBC Eval Board

Size: B	Date: 2022-08-31	Rev: 1.03
KiCad E.D.A. kicad 6.0.2+dfsg-1		Id: 1/1