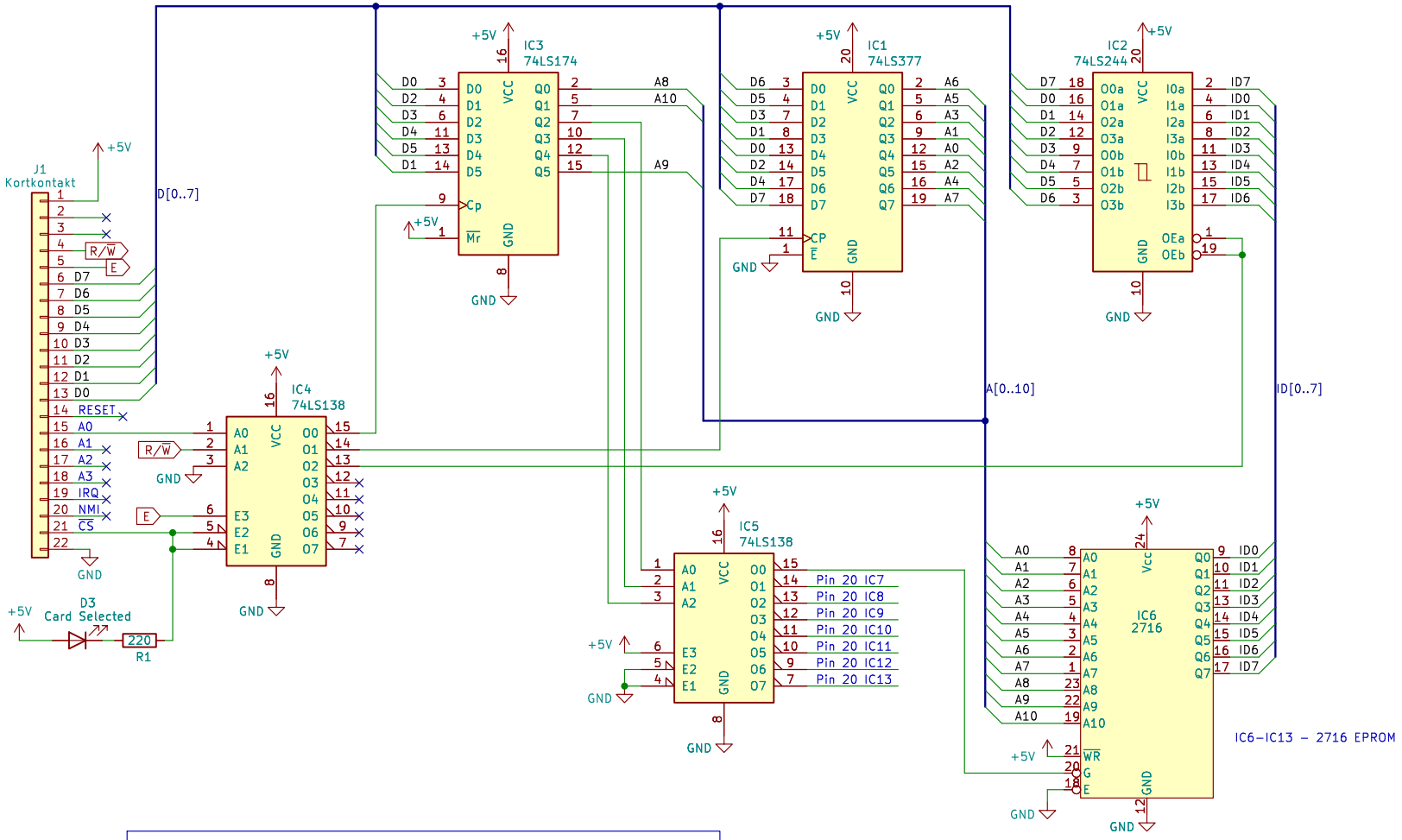

CÅ–8025 EPROM–kort

Åke Holm, CÅ–Elektronik

Sheet: /
File: 8025.kicad_sch

Title: CÅ–8025 EPROM–kort till RT–datorn

Size: A4	Date: 2023–07–21	Rev: 0,1
KiCad E.D.A. kicad 7.0.6		Id: 1/1