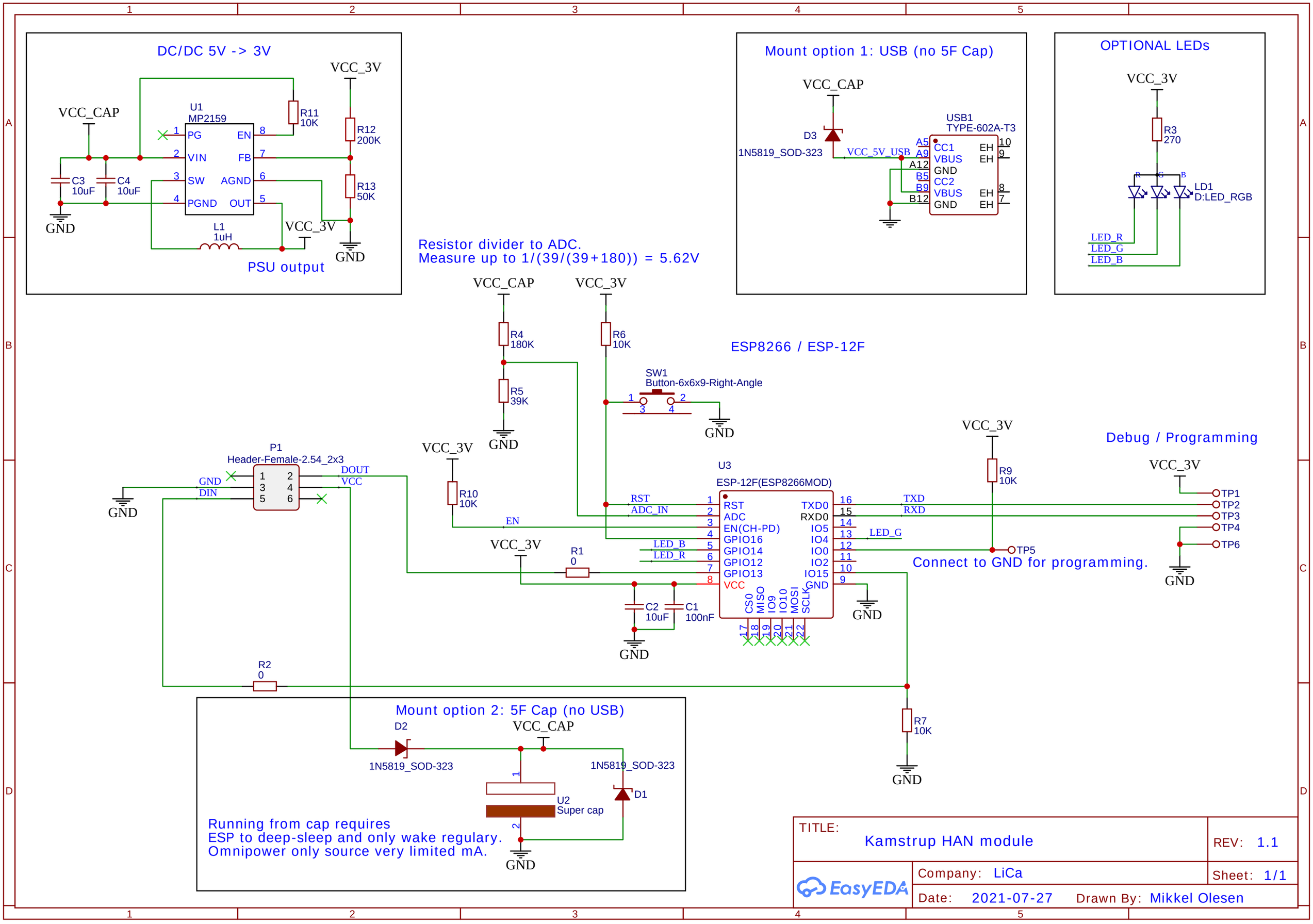
DC/DC 5V -> 3V
VCC_3V
VCC_CAP
U1
MP2159
PG
VIN
SW
PGND
EN
FB
AGND
OUT
R11
10K
R12
200K
R13
50K
C3
10uF
C4
10uF
GND
L1
1uH
VCC_3V
GND
PSU output
Mount option 1: USB (no 5F Cap)
VCC_CAP
D3
1N5819_SOD-323
VCC_5V_USB
USB1
TYPE-602A-T3
CC1
VBUS
GND
CC2
VBUS
GND
EH
OPTIONAL LEDs
VCC_3V
R3
270
LD1
D:LED_RGB
LED_R
LED_G
LED_B
Resistor divider to ADC.
Measure up to 1/(39/(39+180)) = 5.62V
VCC_CAP
VCC_3V
R4
180K
R5
39K
R6
10K
GND
ESP8266 / ESP-12F
SW1
Button-6x6x9-Right-Angle
GND
P1
Header-Female-2.54_2x3
GND
DIN
DOUT
VCC
VCC_3V
R10
10K
EN
U3
ESP-12F(ESP8266MOD)
RST
ADC_IN
EN(CH-PD)
GPIO16
GPIO14
GPIO12
GPIO13
VCC
TXD0
RXD0
IO5
IO4
IO0
IO2
IO15
GND
TXD
RXD
LED_G
LED_B
LED_R
CS0
MISO
IO9
IO10
MOSI
SCLK
VCC_3V
R1
0
C2
10uF
C1
100nF
GND
VCC_3V
R9
10K
Debug / Programming
VCC_3V
TP1
TP2
TP3
TP4
TP6
TP5
GND
Connect to GND for programming.
R2
0
R7
10K
GND
Mount option 2: 5F Cap (no USB)
D2
VCC_CAP
1N5819_SOD-323
1N5819_SOD-323
D1
U2
Super cap
Running from cap requires
ESP to deep-sleep and only wake regulary.
Omnipower only source very limited mA.
GND
TITLE:
Kamstrup HAN module
REV: 1.1
Company: LiCa
Sheet: 1/1
Date: 2021-07-27
Drawn By: Mikkel Olesen
EasyEDA