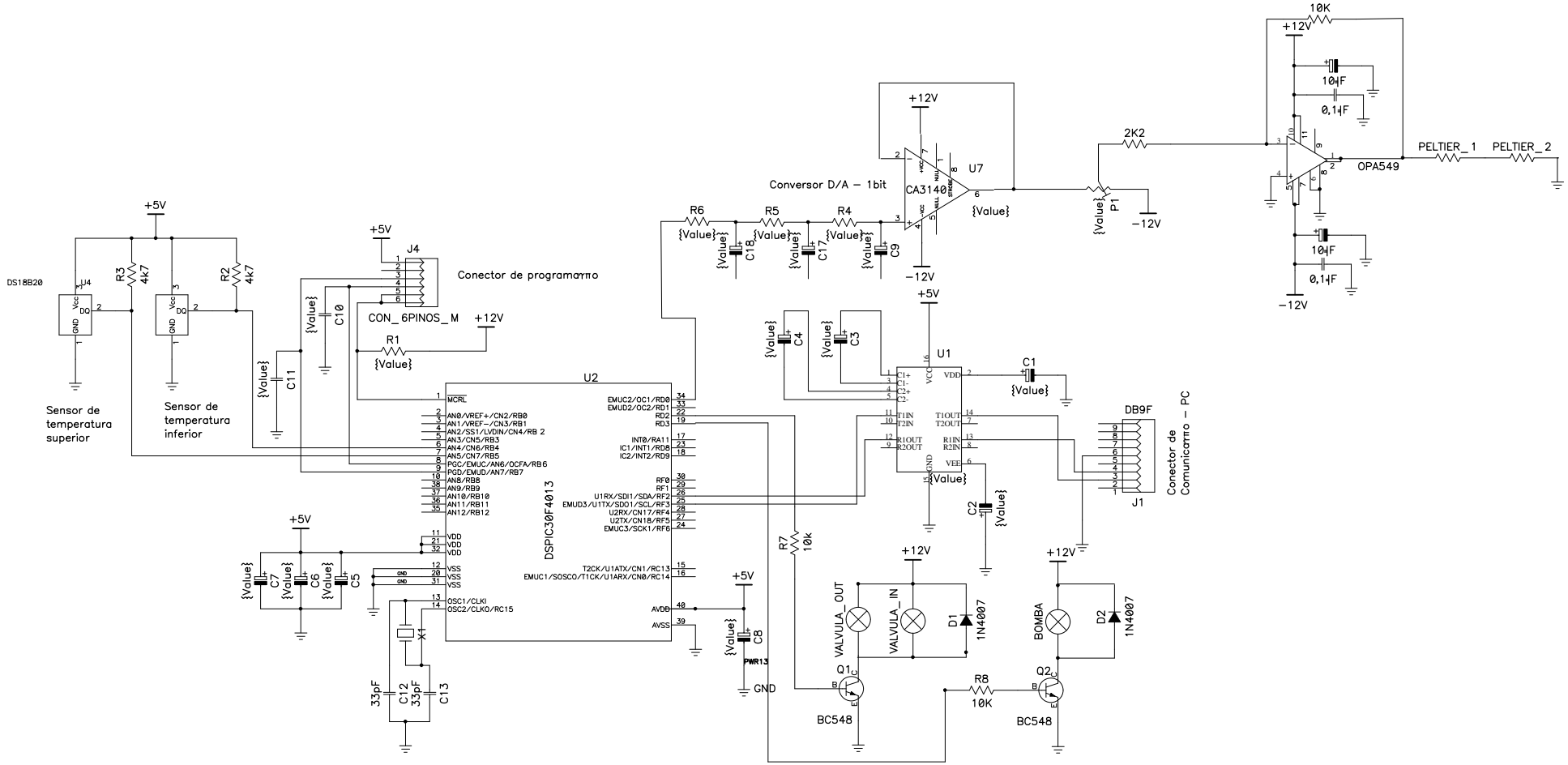
DS18B20
U4
Vcc
DO
GND
R3
4k7
R2
4k7
Sensor de temperatura superior
Sensor de temperatura inferior
+5V
J4
CON_6PINOS_M
Conector de programarmo
+12V
R1
{Value}
C10
C11
U2
DSPIC30F4013
MCRL
AN0/VREF+/CN2/RB0
AN1/VREF-/CN3/RB1
AN2/SS1/LVDIN/CN4/RB 2
AN3/CN5/RB3
AN4/CN6/RB4
AN5/CN7/RB5
PGC/EMUC/AN6/OCFA/RB6
PGD/EMUD/AN7/RB7
AN8/RB8
AN9/RB9
AN10/RB10
AN11/RB11
AN12/RB12
VDD
VSS
GND
OSC1/CLKI
OSC2/CLKO/RC15
X1
33pF
C12
C13
C7
C6
C5
EMUC2/OC1/RD0
EMUD2/OC2/RD1
RD2
RD3
INT0/RA11
IC1/INT1/RD8
IC2/INT2/RD9
RF0
RF1
U1RX/SDI1/SDA/RF2
EMUD3/U1TX/SDO1/SCL/RF3
U2RX/CN17/RF4
U2TX/CN18/RF5
EMUC3/SCK1/RF6
T2CK/U1ATX/CN1/RC13
EMUC1/SOSCO/T1CK/U1ARX/CN0/RC14
AVDD
AVSS
C8
PWR13
R6
R5
R4
C18
C17
C9
Conversor D/A – 1bit
U7
CA3140
-12V
C4
C3
U1
VCC
VDD
VEE
C1+
C1-
C2+
C2-
T1IN
T2IN
R1OUT
R2OUT
T1OUT
T2OUT
R1IN
R2IN
C1
C2
R7
10k
VALVULA_OUT
VALVULA_IN
D1
1N4007
Q1
BC548
R8
10K
BOMBA
D2
Q2
DB9F
J1
Conector de Comunicarmo – PC
2K2
P1
10K
10µF
0,1µF
OPA549
PELTIER_1
PELTIER_2