MITSUBISHI ELECTRIC

General-Purpose AC Servo

MITSUBISHI SERVO AMPLIFIERS & MOTORS

MELSERVO

MODEL

HG-MR
HG-KR
HG-SR
HG-JR
HG-RR
HG-UR
HG-AK

SERVO MOTOR INSTRUCTION MANUAL (Vol. 3)

The following servo amplifiers will be available in the future.
MR-J4-11KGF(-RJ) to MR-J4-22KGF(-RJ)
MR-J4-11KGF4(-RJ) to MR-J4-22KGF4(-RJ)

L

● Safety Instructions ●

Please read the instructions carefully before using the equipment.

Do not attempt to install, operate, maintain or inspect the equipment until you have read through this Instruction Manual and appended documents carefully and can use the equipment correctly. Do not use the equipment until you have a full knowledge of the equipment, safety information and instructions.
In this Instruction Manual, the safety instruction levels are classified into "WARNING" and "CAUTION".

⚠ WARNING	Indicates that incorrect handling may cause hazardous conditions, resulting in death or severe injury.
⚠ CAUTION	Indicates that incorrect handling may cause hazardous conditions, resulting in medium or slight injury to personnel or may cause physical damage.

Note that the CAUTION level may lead to a serious consequence according to conditions.
Please follow the instructions of both levels because they are important to personnel safety.
What must not be done and what must be done are indicated by the following diagrammatic symbols.

⃠	Indicates what must not be done. For example, "No Fire" is indicated by .
●	Indicates what must be done. For example, grounding is indicated by .

In this Instruction Manual, instructions at a lower level than the above, instructions for other functions, and so on are classified into "POINT".
After reading this Instruction Manual, keep it accessible to the operator.

1. To prevent electric shock, note the following

⚠ WARNING

- Before wiring and inspections, turn off the power and wait for 15 minutes or more (20 minutes or more for converter unit and drive unit) until the charge lamp turns off. Then, confirm that the voltage between P+ and N- (L+ and L- for converter unit and drive unit) is safe with a voltage tester and others. Otherwise, an electric shock may occur. In addition, when confirming whether the charge lamp is off or not, always confirm it from the front of the servo amplifier (converter unit).
- Ground the servo motor securely.
- Any person who is involved in wiring and inspection should be fully competent to do the work.
- Do not attempt to wire the servo motor until they have been installed. Otherwise, it may cause an electric shock.
- The cables should not be damaged, stressed, loaded, or pinched. Otherwise, it may cause an electric shock.
- To avoid an electric shock, insulate the connections of the power supply terminals.

2. To prevent fire, note the following

⚠ CAUTION

- Install the servo motor on incombustible material. Installing them directly or close to combustibles will lead to smoke or a fire.
- Provide an adequate protection to prevent screws and other conductive matter, oil and other combustible matter from entering the servo motor.

3. To prevent injury, note the following

⚠ CAUTION

- Only the voltage specified in the Instruction Manual should be applied to each terminal. Otherwise, a burst, damage, etc. may occur.
- Connect cables to the correct terminals. Otherwise, a burst, damage, etc. may occur.
- Ensure that polarity (+/-) is correct. Otherwise, a burst, damage, etc. may occur.
- The servo motor, etc. may be hot while power is on or for some time after power-off. Take safety measures, e.g. provide covers, to prevent accidental contact of hands and parts (cables, etc.) with them.
- The surface temperature of the servo motor may exceed 100 ˚C depending on its mounting and operating conditions.
- During operation, never touch the rotor of the servo motor. Otherwise, it may cause injury.

4. Additional instructions

The following instructions should also be fully noted. Incorrect handling may cause a malfunction, injury, electric shock, fire, etc.

(1) Transportation and installation

⚠ CAUTION

- Transport the products correctly according to their mass.
- Use the eyebolt of the servo motor for the transportation purpose only. Do not use the eyebolts to transport the servo motor when it is mounted on a machine.
- Stacking in excess of the specified number of product packages is not allowed.
- Do not carry the servo motor by holding the cables, shaft, encoder, or connector.
- Install the servo motor in a load-bearing place in accordance with the Instruction Manual.
- Do not get on or put heavy load on the equipment.
- The equipment must be installed in the specified direction.
- Do not install or operate the servo motor which have been damaged or have any parts missing.
- Do not block intake and exhaust areas of the servo motor with a cooling fan. Otherwise, it may cause a malfunction.
- Do not drop or strike the servo motor. Isolate it from all impact loads.
- Securely fix the servo motor to the machine. If being attached insecurely, the servo motor may come off during operation.
- The geared servo motor must be installed in the specified direction to prevent oil leakage.
- When handling the servo motor, be careful about the edged parts such as the corners of the servo motor.
- Be sure to measure the motor vibration level with the servo motor mounted to the machine when checking the vibration level. A great vibration may cause the early damage of a bearing, encoder, brake, and reducer. The great vibration may also cause the poor connector connection or bolt looseness.
- For the gain adjustment at the equipment startup, check the torque waveform and the speed waveform with a measurement device, and then check that no vibration occurs. If the vibration occurs due to high gain, the vibration may cause the early damage of the servo motor.
- Take safety measures, e.g. provide covers, to prevent accidental access to the rotor of the servo motor during operation.
- Never hit the servo motor or shaft, especially when coupling the servo motor to the machine. Otherwise, the encoder may malfunction.
- Do not subject the servo motor shaft to more than the permissible load. Otherwise, the shaft may break.
- When you keep or use the equipment, please fulfill the following environment.

⚠ CAUTION

●When you keep or use the equipment, please fulfill the following environment.

Item		Environment
Ambient temperature	Operation	0 °C to 40 °C (non-freezing)
	Storage	-15 °C to 70 °C (non-freezing)
Ambient humidity	Operation	80 %RH or less (non-condensing)
	Storage	90 %RH or less (non-condensing)
Ambience		Indoors (no direct sunlight), free from corrosive gas, flammable gas, oil mist, dust, and dirt
Altitude		Max. 2000 m above sea level (Note 2)
Vibration resistance (Note 1)	HG-MR Series/HG-KR Series/HG-AK Series	X, Y: 49 m/s^2
	HG-SR51/HG-SR81/HG-SR52(4)/ HG-SR102(4)/HG-SR152(4)/HG-JR53(4)/ HG-JR73(4)/HG-JR103(4)/HG-JR153(4)/ HG-JR203(4)/HG-JR353(4)/HG-JR503(4)/ HG-JR701M(4)/HG-JR11K1M(4)/ HG-JR15K1M(4)/HG-JR22K1M(4)/ HG-JR30K1M(4)/HG-JR37K1M(4)/ HG-JR601(4)/HG-JR801(4)/HG-JR12K1(4)/ HG-JR15K1(4)/HG-JR20K1(4)/HG-JR25K1(4)/ HG-RR Series/HG-UR72/HG-UR152	X, Y: 24.5 m/s^2
	HG-SR121/HG-SR201/HG-SR202(4)/ HG-SR352(4)/HG-UR202/HG-UR352/HG-UR502	X: 24.5 m/s^2 Y: 49 m/s^2
	HG-SR301/HG-SR421/HG-SR502(4)/ HG-SR702(4)/HG-JR703(4)/HG-JR903(4)	X: 24.5 m/s^2 Y: 29.4 m/s^2
	HG-JR45K1M4/HG-JR55K1M4/ HG-JR30K1(4)/HG-JR37K1(4)	X: 9.8 m/s^2 Y: 9.8 m/s^2

Note 1. Except the geared servo motor.
2. Contact your local sales office for the altitude for options. The HG-AK series servo motor is available at an altitude of 1000 m or less above sea level.

(2) Wiring

⚠ CAUTION

●Wire the equipment correctly and securely. Otherwise, the servo motor may operate unexpectedly.

●Do not install a power capacitor, surge killer, or radio noise filter (FR-BIF-(H) option) on the servo amplifier (converter unit) output side.

●To avoid a malfunction, connect the wires to the correct phase terminals (U, V, and W) of the servo amplifier (converter unit) and servo motor.

●Connect the servo amplifier (converter unit) power output (U, V, and W) to the servo motor power input (U, V, and W) directly. Do not let a magnetic contactor, etc. intervene. Otherwise, it may cause a malfunction.

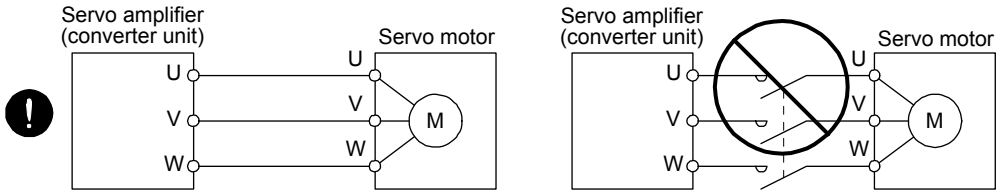

●Do not connect AC power supply directly to the servo motor. Otherwise, it may cause a malfunction.

●When the cable is not tightened enough to the terminal block, the cable or terminal block may generate heat because of the poor contact. Be sure to tighten the cable with specified torque.

(3) Test run and adjustment

⚠ CAUTION

- Before operation, check the parameter settings. Improper settings may cause some machines to operate unexpectedly.
- Never adjust or change the parameter values extremely as it will make operation unstable.

(4) Usage

⚠ CAUTION

- Provide an external emergency stop circuit to ensure that operation can be stopped and power switched off immediately.
- Do not scratch the coated surface with hard objects nor clean the coated surface with an organic solvent. Doing so may scuff the surface.
- Do not disassemble, repair, or modify the equipment.
- Use the servo amplifier (converter unit) with the specified servo motor.
- The electromagnetic brake on the servo motor is designed to hold the motor shaft and should not be used for ordinary braking.
- For such reasons as service life and mechanical structure (e.g. where a ball screw and the servo motor are coupled via a timing belt), the electromagnetic brake may not hold the motor shaft. To ensure safety, install a stopper on the machine side.

(5) Corrective actions

⚠ CAUTION

- When it is assumed that a hazardous condition may occur due to a power failure or product malfunction, use a servo motor with an electromagnetic brake or external brake to prevent the condition.
- Configure an electromagnetic brake circuit so that it is activated also by an external emergency stop switch.

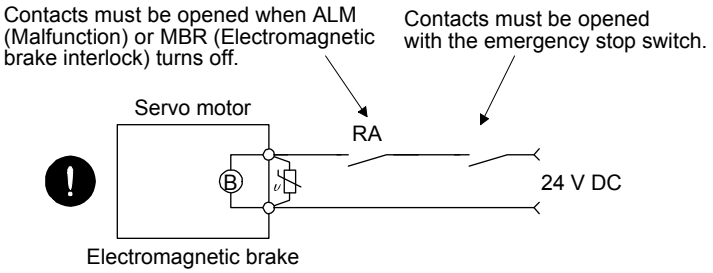

- When any alarm has occurred, eliminate its cause, ensure safety, and deactivate the alarm before restarting operation.
- Provide an adequate protection to prevent unexpected restart after an instantaneous power failure.

(6) Storage

⚠ CAUTION

- Note the followings when storing the servo motor for an extended period of time (guideline: three or more months).
- Always store the servo motor indoors in a clean and dry place.
- If it is stored in a dusty or damp place, make adequate provision, e.g. cover the whole product.
- If the insulation resistance of the winding decreases, check how to store the equipment.
- Though the servo motor is rust-proofed before shipment using paint or rust prevention oil, rust may be produced depending on the storage conditions or storage period.
  If the servo motor is to be stored for longer than six months, apply rust prevention oil again especially to the machined surfaces of the shaft, etc.
- Before using the product after storage for an extended period of time, hand-turn the servo motor output shaft to confirm that nothing is wrong with the servo motor. When the servo motor is equipped with an electromagnetic brake, check it after releasing the electromagnetic brake with the brake power supply.
- When the product has been stored for an extended period of time, contact your local sales office.

(7) General instruction

- To illustrate details, the equipment in the diagrams of this Instruction Manual may have been drawn without covers and safety guards. When the equipment is operated, the covers and safety guards must be installed as specified. Operation must be performed in accordance with this Specifications and Instruction Manual.

● DISPOSAL OF WASTE ●

Please dispose a servo motor and other options according to your local laws and regulations.

«U.S. customary units»

U.S. customary units are not shown in this manual. Convert the values if necessary according to the following table.

Quantity	SI (metric) unit	U.S. customary unit
Mass	1 [kg]	2.2046 [lb]
Length	1 [mm]	0.03937 [inch]
Torque	1 [N•m]	141.6 [oz•inch]
Moment of inertia	1 [(× 10^{-4} kg•m^2)]	5.4675 [oz•$inch^2$]
Load (thrust load/axial load)	1 [N]	0.2248 [lbf]
Temperature	N [°C] × 9/5 + 32	N [°F]

CONTENTS

1. INTRODUCTION 1- 1 to 1- 8

1.1 Rating plate 1- 1
1.2 Parts identification 1- 2
1.3 Electromagnetic brake 1- 3
1.4 Servo motor shaft shapes 1- 5
1.5 Servo motor with functional safety 1- 6

2. INSTALLATION 2- 1 to 2- 8

2.1 Mounting direction 2- 2
2.2 Cooling fan 2- 2
2.3 Load remove precautions 2- 3
2.4 Permissible load for the shaft 2- 4
2.5 Protection from oil and water 2- 4
2.6 Cable 2- 5
2.7 Servo motor with oil seal 2- 5
2.8 Inspection items 2- 5
2.9 Parts having service lives 2- 6
2.10 Restrictions when using the servo amplifiers at altitude exceeding 1000 m and up to 2000 m above sea level 2- 6
2.11 Machine accuracies 2- 7

3. CONNECTORS USED FOR SERVO MOTOR WIRING 3- 1 to 3-12

3.1 Selection of connectors 3- 1
3.2 Wiring connectors (connector configurations A/B/C) 3- 5
3.3 Wiring connectors (connector configurations D/E/F/G/H) 3- 6
3.4 Wiring connectors (connector configurations J/K/L/M/N/P/Q) 3-10

4. CONNECTION OF SERVO AMPLIFIER AND SERVO MOTOR 4- 1 to 4-26

4.1 Connection instructions 4- 2
4.2 Wiring 4- 3
4.2.1 HG-MR series/HG-KR series servo motor 4- 3
4.2.2 HG-SR series/HG-JR series/HG-RR series/HG-UR series servo motor 4- 8
4.2.3 HG-AK series servo motor 4-14
4.3 Selection example of wires 4-16
4.4 Servo amplifier terminal section 4-20

5. WIRING OPTION 5- 1 to 5-34

5.1 Cable/connector sets 5- 1
5.1.1 Combinations of cable/connector sets 5- 2
5.1.2 Cable and connector list 5- 4
5.2 Encoder cable/connector sets 5-10
5.3 Servo motor power cable 5-27
5.4 Servo motor power cable (for HG-AK series) 5-29
5.5 Electromagnetic brake cable 5-30

5.6 Wires for option cables 5-32

6. HG-MR SERIES/HG-KR SERIES 6- 1 to 6-60

6.1 Model code definition 6- 1
6.2 Combination list of servo motors and servo amplifiers 6- 2
6.3 Standard specifications 6- 4
6.3.1 Standard specifications list 6- 4
6.3.2 Torque characteristics 6- 6
6.4 Electromagnetic brake characteristics 6- 7
6.5 Servo motors with special shafts 6- 8
6.5.1 Key shaft (with 2 round end key) 6- 8
6.5.2 D cut shaft 6- 8
6.6 Geared servo motors 6- 9
6.6.1 For general industrial machines (G1) 6- 9
6.6.2 For high precision applications (G5/G7) 6-12
6.7 Mounting connectors 6-15
6.8 Dimensions 6-16
6.8.1 Standard (without electromagnetic brake and reducer) 6-16
6.8.2 With an electromagnetic brake 6-19
6.8.3 For general industrial machine with a reducer (without an electromagnetic brake) 6-22
6.8.4 For general industrial machine with a reducer (with an electromagnetic brake) 6-28
6.8.5 With flange-output type reducer for high precision applications, flange mounting (without an electromagnetic brake) 6-34
6.8.6 With flange-output type reducer for high precision applications, flange mounting (with an electromagnetic brake) 6-41
6.8.7 With shaft-output type reducer for high precision applications, flange mounting (without an electromagnetic brake) 6-47
6.8.8 With shaft-output type reducer for high precision applications, flange mounting (with an electromagnetic brake) 6-53

7. HG-SR SERIES 7- 1 to 7-96

7.1 Model code definition 7- 1
7.2 Combination list of servo motors and servo amplifiers 7- 2
7.3 Standard specifications 7- 4
7.3.1 Standard specifications list 7- 4
7.3.2 Torque characteristics 7- 7
7.4 Electromagnetic brake characteristics 7- 9
7.5 Servo motors with special shafts 7-10
7.6 Geared servo motors 7-11
7.6.1 For general industrial machines (G1/G1H) 7-11
7.6.2 For high precision applications (G5/G7) 7-15
7.7 Dimensions 7-18
7.7.1 Standard (without electromagnetic brake and reducer) 7-18
7.7.2 With an electromagnetic brake 7-21
7.7.3 For general industrial machine with a reducer (without an electromagnetic brake) 7-28
7.7.4 For general industrial machine with a reducer (with an electromagnetic brake) 7-38
7.7.5 For general industrial machine with a reducer (foot-mounting/without an electromagnetic brake) 7-48

7.7.6 For general industrial machine with a reducer (foot-mounting/with an electromagnetic brake) 7-58
7.7.7 With flange-output type reducer for high precision applications, flange mounting (without an electromagnetic brake) 7-69
7.7.8 With flange-output type reducer for high precision applications, flange mounting (with an electromagnetic brake) 7-76
7.7.9 With shaft-output type reducer for high precision applications, flange mounting (without an electromagnetic brake) 7-83
7.7.10 With shaft-output type reducer for high precision applications, flange mounting (with an electromagnetic brake) 7-90

8. HG-JR SERIES 8- 1 to 8-48

8.1 Model designation 8- 1
8.2 Combination list of servo motors and servo amplifiers/drive units 8- 2
8.3 Standard specifications 8- 9
8.3.1 Standard specifications list 8- 9
8.3.2 Torque characteristics 8-16
8.4 Electromagnetic brake characteristics 8-20
8.5 Servo motors with special shafts 8-21
8.6 Oil seal 8-22
8.7 Cooling fan 8-22
8.8 Dimensions 8-23
8.8.1 Terminal box detail diagram 8-23
8.8.2 Standard (without an electromagnetic brake) 8-24
8.8.3 With an electromagnetic brake 8-38

9. HG-RR SERIES 9- 1 to 9-12

9.1 Model designation 9- 1
9.2 Combination list of servo motors and servo amplifiers 9- 1
9.3 Standard specifications 9- 2
9.3.1 Standard specifications list 9- 2
9.3.2 Torque characteristics 9- 4
9.4 Electromagnetic brake characteristics 9- 5
9.5 Servo motors with special shafts 9- 6
9.6 Oil seal 9- 6
9.7 Dimensions 9- 7
9.7.1 Standard (without an electromagnetic brake) 9- 7
9.7.2 With an electromagnetic brake 9- 9

10. HG-UR SERIES 10- 1 to 10-12

10.1 Model designation 10- 1
10.2 Combination list of servo motors and servo amplifiers 10- 1
10.3 Standard specifications 10- 2
10.3.1 Standard specifications list 10- 2
10.3.2 Torque characteristics 10- 4
10.4 Electromagnetic brake characteristics 10- 5
10.5 Servo motors with special shafts 10- 6
10.6 Oil seal 10- 6

10.7 Dimensions 10- 7
10.7.1 Standard (without an electromagnetic brake) 10- 7
10.7.2 With an electromagnetic brake 10- 9

11. HG-AK SERIES 11- 1 to 11-14

11.1 Model designation 11- 1
11.2 Combination list of servo motors and servo amplifiers 11- 1
11.3 Standard specifications 11- 2
11.3.1 Standard specifications list 11- 2
11.3.2 Torque characteristics 11- 4
11.4 Electromagnetic brake characteristics 11- 5
11.5 Servo motors with special shafts 11- 6
11.6 Dimensions 11- 7
11.6.1 Standard (without an electromagnetic brake) 11- 8
11.6.2 With an electromagnetic brake 11-11

APPENDIX App. - 1 to App. -36

App. 1 Servo motor ID codes ..... App.- 1
App. 2 Manufacturer list ..... App.- 3
App. 3 Compliance with the CE marking ..... App.- 4
App. 4 Compliance with UL/CSA standard ..... App.- 5
App. 5 Calculation methods for designing ..... App.- 9
App. 6 Selection example of servo motor power cable App.-27
App. 7 Crimping connector for CNP3_ App.-28
App. 8 Connector dimensions App.-29
App. 9 HG-JR22K1M(4) appearance change App.-35
App. 10 Fabrication of the encoder cable App.-36

1. INTRODUCTION

1.1 Rating plate

The following shows an example of rating plate for explanation of each item.

(1) HG-MR/HG-KR/HG-SR/HG-JR/HG-RR/HG-UR series servo motor

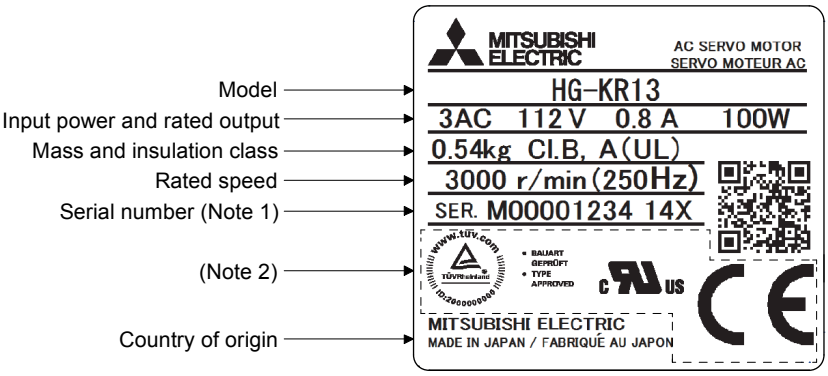

Note 1. Production year and month of the servo motor are indicated in a serial number on the rating plate.
The year and month are indicated by the last two digits of the year and one digit of the month [1 to 9, X(10), Y(11), and Z(12)].
For January 2012, the Serial No. is like, "SER. _ _ _ _ _ _ _ _ _ 121".

2. Products approved by Certification Bodies are marked. The marks depends on the Certification Bodies.

(2) HG-AK series servo motor

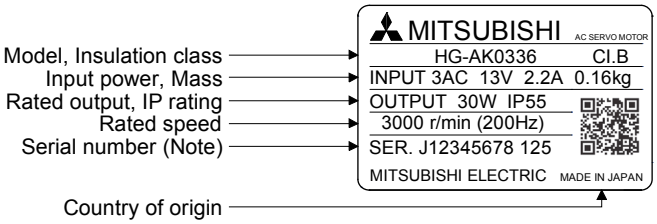

Note. Production year and month of the servo motor are indicated in a serial number on the rating plate.
The year and month of manufacture are indicated by the last two digits of the year and one digit of the month [1 to 9, X (10), Y (11), and Z (12)].
For June 2012, the Serial No. is like, "SER. _ _ _ _ _ _ _ _ _ 126".

1.2 Parts identification

(1) HG-MR series/HG-KR series servo motor

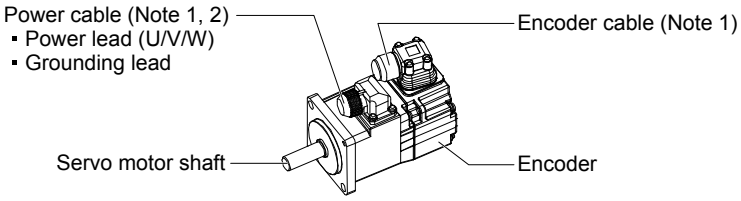

Note 1. The encoder cable and power supply cable are options.
2. An electromagnetic brake cable is separately required for the servo motor with an electromagnetic brake.

(2) HG-SR series/HG-JR53(4) to HG-JR903(4)/HG-JR701M(4) to HG-JR15K1M(4)/HG-JR601(4) to HG-JR12K1(4)/HG-RR series/HG-UR series servo motor

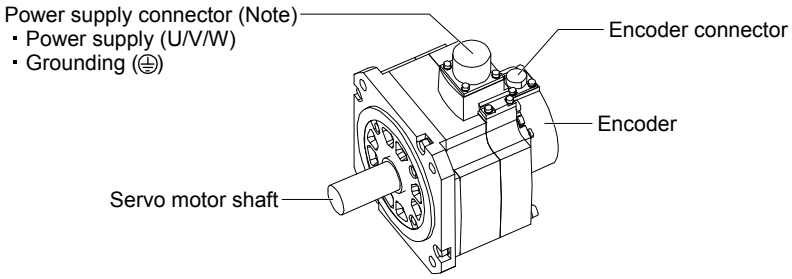

Note. The servo motor with an electromagnetic brake has the electromagnetic brake connector separately.

(3) HG-JR22K1M(4) to HG-JR37K1M(4)/HG-JR45K1M4/HG-JR55K1M4/HG-JR15K1(4) to HG-JR37K1(4) servo motor

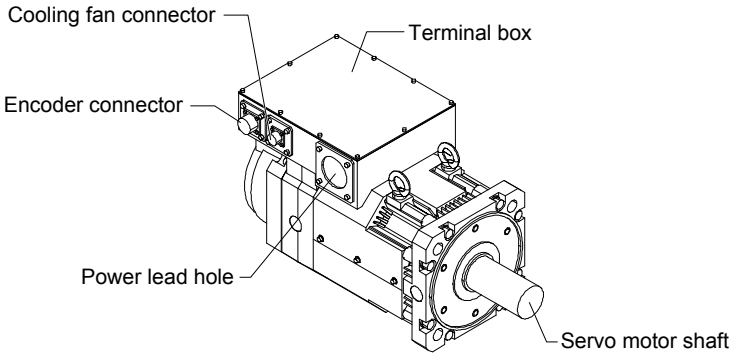

(4) HG-AK series servo motor

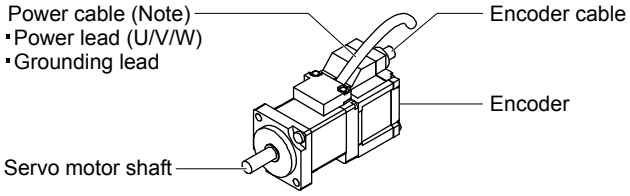

Note. The servo motor with an electromagnetic brake has electromagnetic brake lead.

1.3 Electromagnetic brake

⚠CAUTION	●The electromagnetic brake is provided to prevent a drop at a power failure or servo alarm occurrence during vertical drive or to hold a shaft at a stop. Do not use it for normal braking (including braking at servo-lock). ●The electromagnetic brake has a time lag. Use the electromagnetic brake so that servo motor control starts after the electromagnetic brake has completely opened. Be sure to check the time lag of the braking with a real machine. ●Configure an electromagnetic brake circuit so that it is activated also by an external emergency stop switch. ●For details of the circuit configuration and timing chart, refer to each servo amplifier instruction manual. ●While the electromagnetic brake is opened, the motor may be raised to high temperature regardless of driving. ●The life will be shorten under sudden acceleration/deceleration conditions.

The servo motor with an electromagnetic brake can be used to prevent a drop in vertical lift applications or to ensure double safety at an emergency stop, for example. When operating the servo motor, supply power to the electromagnetic brake to release the brake. Switching power off enables the electromagnetic brake.

(1) Electromagnetic brake power supply
Prepare the following power supply for use with the electromagnetic brake only. The electromagnetic brake terminals (B1 and B2) have no polarity.

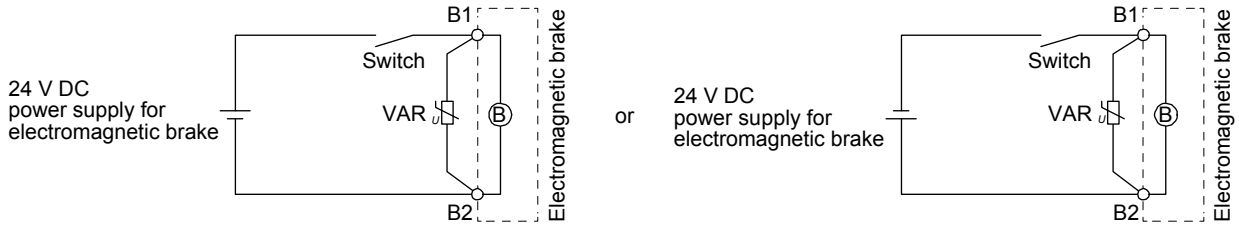

The surge absorber (VAR) must be installed between B1 and B2. For the selection and example of surge absorbers, refer to "Electromagnetic brake characteristic" in the chapter of servo motor series. When you use a diode for a surge absorber, the electromagnetic braking time will be longer.

(2) Sound generation

Though the brake lining may rattle during operation, it poses no functional problem.
If braking sounds, it may be improved by setting the machine resonance suppression filter in the servo amplifier (converter unit) parameters. For details, refer to each servo amplifier instruction manual.

(3) Selection of surge absorbers for electromagnetic brake circuit

The following shows an example how to select a varistor with a surge absorber.

(a) Selection conditions

Item	Condition
Electromagnetic brake specification	R [Ω]: Resistance L [H]: Inductance Vb [V]: Power supply voltage
Desired suppression voltage	Vs [V] or less
Durable surge application time	N times

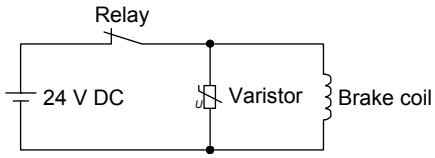

(b) Tentative selection and verification of surge absorber

1) Maximum allowable circuit voltage of varistor

Tentatively select a varistor whose maximum allowable voltage is larger than Vb [V].

2) Brake current (Ib)

$$Ib = \frac{Vb}{R} \text{ [A]}$$

3) Energy (E) generated by brake coil

$$E = \frac{L \times Ib^2}{2} \text{ [J]}$$

4) Varistor limit voltage (Vi)

From the energy (E) generated in the brake coil and the varister characteristic diagram, calculate the varistor limit voltage (Vi) when the brake current (Ib) flows into the tentatively selected varistor during opening of the circuit.
Vi is favorable when the varistor limit voltage (Vi) [V] is smaller than the desired suppressed voltage (Vs) [V].
If Vi is not smaller than Vs, reselect a varistor or improve the withstand voltage of devices.

5) Surge current width (τ)

Given that the varistor absorbs all energies, the surge current width (τ) will be as follows.

$$\tau = \frac{E}{Vi \times Ib} \text{ [S]}$$

6) Examining surge life of varister

From the varistor characteristic diagram, the guaranteed current value (Ip) in which the number of the surge application life is N at the surge current width (τ). Calculate the guaranteed current value (Ip) ratio to brake current (Ib).
If an enough margin is ensured for Ip/Ib, the number of the surge application life N [time] can be considered as favorable.

(4) Others

A leakage magnetic flux will occur at the shaft end of the servo motor equipped with an electromagnetic brake. Note that chips, screws, etc. are attracted.

1.4 Servo motor shaft shapes

In addition to the straight shaft, the key shaft and D cut shaft are available.
The key shaft and D cut shaft cannot be used in frequent start/stop applications.
Since we cannot warrant the servo motor against fracture and similar accidents attributable to a loose key, use a friction coupling, etc. when coupling the shaft with a machine.
The shaft shape of the standard servo motor changes depending on the series and capacity. Refer to the chapter of the servo motor series.
The key shaft (with single pointed key) applies to only the geared servo motor for high precision application.

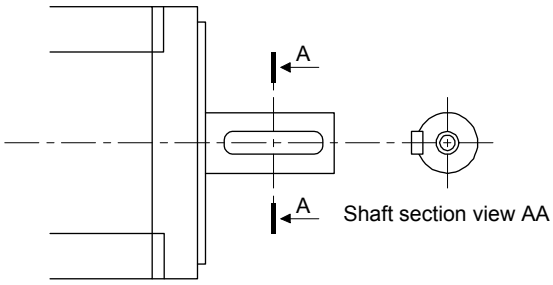

Key shaft (with 2 round end key)

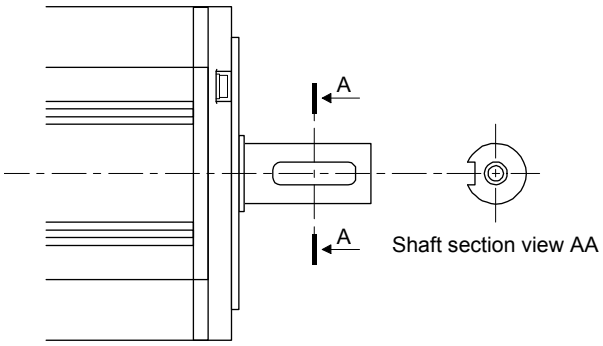

Key shaft (without key)

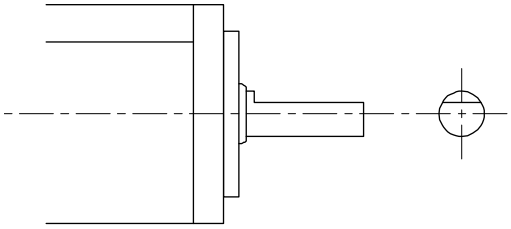

D cut shaft

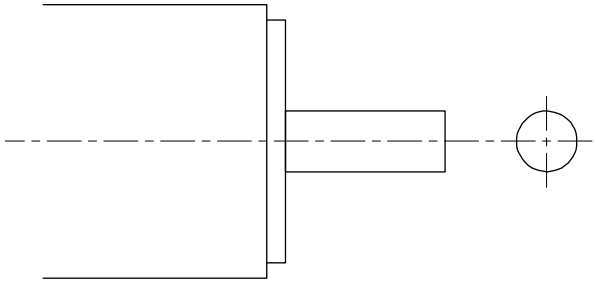

Straight shaft

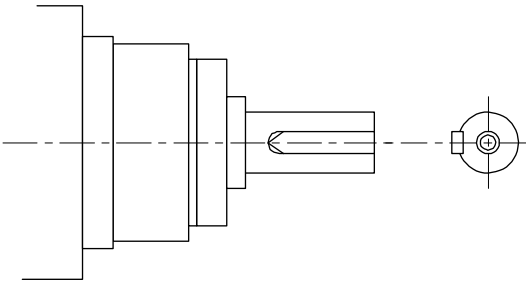

Key shaft (with single pointed key)

1.5 Servo motor with functional safety

POINT
●When you use a servo motor with functional safety, MR-BT6VCASE battery case cannot be used.

The servo motors with functional safety can expand the safety observation function by using them with MR-D30 functional safety units and MR-J4-_-RJ servo amplifiers.
The servo motors with functional safety are available with the following HG-KR series, HG-SR series, and HG-JR series. The servo motors with functional safety have the same specifications and dimensions.
Refer to section 4.1 of "MR-D30 Instruction Manual" (SH(NA)030132) for the available safety observation functions and achievable safety level.
To expand the safety observation function by using servo motors with functional safety, use a servo amplifier in this section with MR-D30.

(1) HG-KR series

Servo motors with functional safety	Servo amplifier
HG-KR053W0C HG-KR13W0C	MR-J4-10B-RJ MR-J4-10A-RJ MR-J4-10B1-RJ MR-J4-10A1-RJ
HG-KR23W0C	MR-J4-20B-RJ MR-J4-20A-RJ MR-J4-20B1-RJ MR-J4-20A1-RJ
HG-KR43W0C	MR-J4-40B-RJ MR-J4-40A-RJ MR-J4-40B1-RJ MR-J4-40A1-RJ
HG-KR73W0C	MR-J4-70B-RJ MR-J4-70A-RJ

Note. This combination increases the maximum torque from 300% to 400% of the rated torque.

(2) HG-SR series

Servo motors with functional safety	Servo amplifier
HG-SR51W0C HG-SR52W0C	MR-J4-60B-RJ MR-J4-60A-RJ
HG-SR81W0C HG-SR102W0C	MR-J4-100B-RJ MR-J4-100A-RJ
HG-SR121W0C HG-SR201W0C HG-SR152W0C HG-SR202W0C	MR-J4-200B-RJ MR-J4-200A-RJ
HG-SR301W0C HG-SR352W0C	MR-J4-350B-RJ MR-J4-350A-RJ
HG-SR421W0C HG-SR502W0C	MR-J4-500B-RJ MR-J4-500A-RJ
HG-SR702W0C	MR-J4-700B-RJ MR-J4-700A-RJ
HG-SR524W0C	MR-J4-60B4-RJ MR-J4-60A4-RJ
HG-SR1024W0C	MR-J4-100B4-RJ MR-J4-100A4-RJ
HG-SR1524W0C HG-SR2024W0C	MR-J4-200B4-RJ MR-J4-200A4-RJ
HG-SR3524W0C	MR-J4-350B4-RJ MR-J4-350A4-RJ
HG-SR5024W0C	MR-J4-500B4-RJ MR-J4-500A4-RJ
HG-SR7024W0C	MR-J4-700B4-RJ MR-J4-700A4-RJ

Note. This combination increases the maximum torque from 300% to 400% of the rated torque.

(3) HG-JR series

Servo motors with functional safety	Servo amplifier
HG-JR53W0C	MR-J4-60B-RJ MR-J4-60A-RJ MR-J4-100B-RJ (Note) MR-J4-100A-RJ (Note)
HG-JR73W0C	MR-J4-70B-RJ MR-J4-70A-RJ MR-J4-200B-RJ (Note) MR-J4-200A-RJ (Note)
HG-JR103W0C	MR-J4-100B-RJ MR-J4-100A-RJ MR-J4-200B-RJ (Note) MR-J4-200A-RJ (Note)
HG-JR153W0C HG-JR203W0C	MR-J4-200B-RJ MR-J4-200A-RJ MR-J4-350B-RJ (Note) MR-J4-350A-RJ (Note)
HG-JR353W0C	MR-J4-350B-RJ MR-J4-350A-RJ MR-J4-500B-RJ (Note) MR-J4-500A-RJ (Note)
HG-JR503W0C	MR-J4-500B-RJ MR-J4-500A-RJ MR-J4-700B-RJ (Note) MR-J4-700A-RJ (Note)

Servo motors with functional safety	Servo amplifier
HG-JR703W0C HG-JR701MW0C	MR-J4-700B-RJ MR-J4-700A-RJ
HG-JR903W0C HG-JR11K1MW0C	MR-J4-11KB-RJ MR-J4-11KA-RJ
HG-JR15K1MW0C	MR-J4-15KB-RJ MR-J4-15KA-RJ
HG-JR22K1MW0C	MR-J4-22KB-RJ MR-J4-22KA-RJ
HG-JR534W0C	MR-J4-60B4-RJ MR-J4-60A4-RJ MR-J4-100B4-RJ (Note) MR-J4-100A4-RJ (Note)
HG-JR734W0C HG-JR1034W0C	MR-J4-100B4-RJ MR-J4-100A4-RJ MR-J4-200B4-RJ (Note) MR-J4-200A4-RJ (Note)
HG-JR1534W0C HG-JR2034W0C	MR-J4-200B4-RJ MR-J4-200A4-RJ MR-J4-350B4-RJ (Note) MR-J4-350A4-RJ (Note)
HG-JR3534W0C	MR-J4-350B4-RJ MR-J4-350A4-RJ MR-J4-500B4-RJ (Note) MR-J4-500A4-RJ (Note)
HG-JR5034W0C	MR-J4-500B4-RJ MR-J4-500A4-RJ MR-J4-700B4-RJ (Note) MR-J4-700A4-RJ (Note)
HG-JR7034W0C HG-JR701M4W0C	MR-J4-700B4-RJ MR-J4-700A4-RJ
HG-JR11K1M4W0C HG-JR9034W0C	MR-J4-11KB4-RJ MR-J4-11KA4-RJ
HG-JR15K1M4W0C	MR-J4-15KB4-RJ MR-J4-15KA4-RJ
HG-JR22K1M4W0C	MR-J4-22KB4-RJ MR-J4-22KA4-RJ

Note. This combination increases the maximum torque from 300% to 400% of the rated torque.

2. INSTALLATION

⚠WARNING	●To prevent electric shock, ground each equipment securely.

⚠CAUTION	●Stacking in excess of the specified number of product packages is not allowed. ●Install the equipment on incombustible material. Installing it directly or close to combustibles will lead to a fire. ●Install the servo motor in a load-bearing place in accordance with the Instruction Manual. ●Do not get on or put heavy load on the equipment. Otherwise, it may cause injury. ●Use the equipment within the specified environmental range. For the environment, refer to the specifications of the servo motor series. ●Do not drop or strike the servo motor. Isolate it from all impact loads. ●Do not install or operate a faulty servo motor. ●Do not carry the servo motor by holding the cables, shaft, encoder, or connector. Otherwise, it may cause a malfunction or injury. ●Use the eyebolts of the servo motor to only transport it. Do not use the eyebolts to transport the servo motor when it is mounted on a machine. ●The geared servo motor must be mounted in the specified direction. Otherwise, it can leak oil, leading to a fire or malfunction. ●Securely fix the servo motor to the machine. If being attached insecurely, the servo motor may come off during operation, leading to injury. ●Be sure to measure the motor vibration level with the servo motor mounted on the machine when checking the vibration level. A great vibration may cause the early damage of a bearing, encoder, brake, and reducer. The great vibration may also cause the poor connector connection or bolt looseness. ●For the gain adjustment at the equipment startup, check the torque waveform and the speed waveform with a measurement device to check that no vibration occurs. If the vibration occurs due to high gain, the vibration may cause the early damage of the servo motor. ●Never hit the servo motor or shaft, especially when coupling the servo motor to the machine. Otherwise, the encoder may malfunction. ●When coupling a load to the servo motor, do not use a rigid coupling. Doing so can cause the shaft to break and the bearing to wear out. ●Balance the load to the extent possible. Not doing so can cause vibration during servo motor operation or damage the bearings and encoder. ●Take safety measures, e.g. provide covers, to prevent accidental access to the rotor of the servo motor during operation. ●Do not subject the servo motor shaft to more than the permissible load. Otherwise, the shaft may break, leading to injury. ●When the product has been stored for an extended period of time, contact your local sales office. ●When handling the servo motor, be careful about the edged parts such as the corners of the servo motor.

2.1 Mounting direction

(1) Standard servo motor

The following table indicates the mounting direction of the standard servo motor.

Servo motor series	Mounting direction
HG-MR HG-KR HG-SR HG-JR HG-RR HG-UR HG-AK	All directions

For mounting in the horizontal direction, it is recommended to set the connector section downward. When mounting the motor vertically or obliquely, give a little slack for the connection cable.

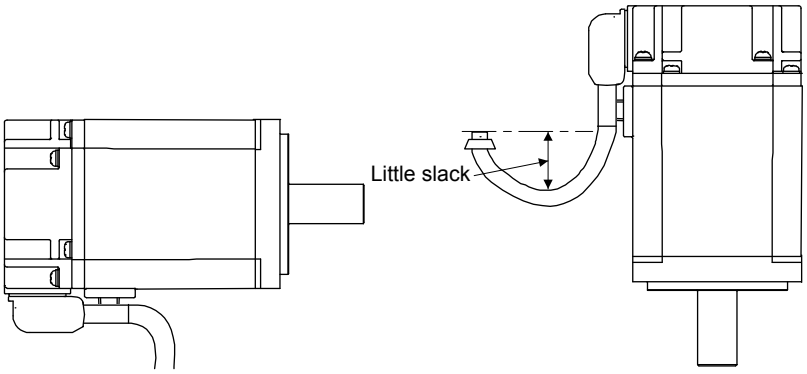

(2) Servo motor with an electromagnetic brake

The servo motor with an electromagnetic brake can also be installed in the same orientation as the standard servo motor. When the servo motor with an electromagnetic brake is installed with the shaft end at top, the brake plate may generate sliding sound but it is not a fault.

(3) Geared servo motors

The mounting direction of the geared servo motor differs depending on the reducer type. Be sure to mount it in the specified direction. Refer to the chapter of the servo motor series for details.

2.2 Cooling fan

For the servo motor with a cooling fan, ensure to put enough space for the distance L between intake port and wall surface. Refer to the chapter of the servo motor series for the distance L.

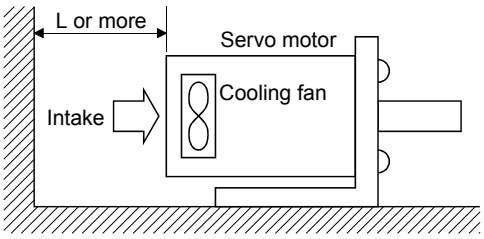

2.3 Load remove precautions

⚠CAUTION

●During assembling, the shaft end must not be hammered. Otherwise, the encoder may malfunction.

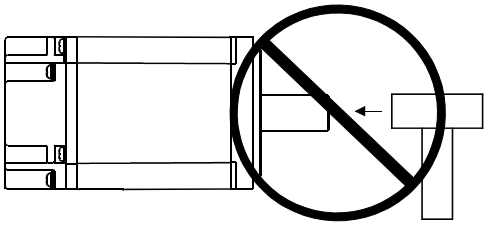

●Do not process the shaft to avoid damage to the encoder and bearing.

(1) When mounting a pulley to the servo motor with a key shaft, use the screw hole in the shaft end. To fit the pulley, first insert a double-end stud into the screw hole of the shaft, put a washer against the end face of the coupling, and insert and tighten a nut to force the pulley in.

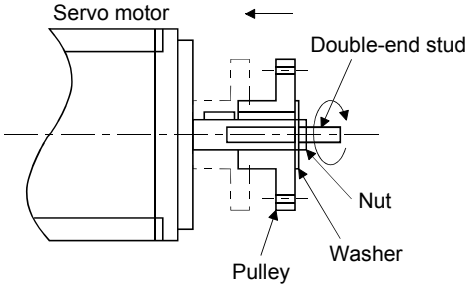

(2) For the shaft without a key, use a friction coupling or the like.

(3) When removing the pulley, use a pulley remover to protect the shaft from hard load and or impact.

(4) To ensure safety, fit a protective cover or the like on the rotary area, such as the pulley, mounted to the shaft.

(5) When a threaded shaft end part is needed to mount a pulley on the shaft, please contact your local sales office.

(6) The direction of the encoder on the servo motor cannot be changed.

(7) When mounting the servo motor, use spring washers, etc. and fully tighten the bolts so that they do not become loose due to vibration.

2.4 Permissible load for the shaft

⚠CAUTION	●Do not use a rigid coupling as it may apply excessive bending load to the shaft of the servo motor, leading the shaft to break and the bearing to wear out.

For the permissible shaft load specific to the servo motor, refer to the chapter of the servo motor series.

(1) Use a flexible coupling and adjust the misalignment of the shaft to less than the permissible radial load.

(2) When using a pulley, sprocket or timing belt, select a diameter that will fit into the permissible radial load.

(3) Excess of the permissible load can cause the bearing life to reduce and the shaft to break.

(4) The load indicated in this section is static load in a single direction and does not include eccentric load. Make eccentric load as small as possible. Not doing so can cause the servo motor to be damaged.

2.5 Protection from oil and water

Provide adequate protection to prevent foreign matter, such as oil from entering the servo motor shaft. When installing the servo motor, consider the items in this section.

(1) Do not use the servo motor with its cable soaked in oil or water.

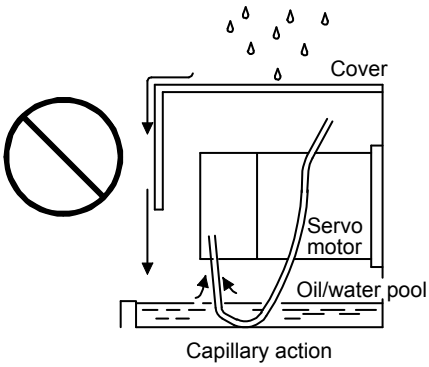

(2) When the servo motor is to be installed with the shaft end at top, provide measures so that it is not exposed to oil and water entering from the machine side, gear box, etc.

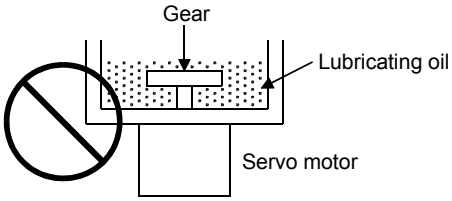

(3) If oil such as cutting oil drops on the servo motor, the sealant, packing, cable and others may be affected depending on the oil type.

(4) In the environment where the servo motor is exposed to oil mist, oil, water, grease and/or like, a standard specifications servo motor may not be usable. Please contact your local sales office.

2.6 Cable

The power supply and encoder cables routed from the servo motor should be fixed to the servo motor to keep them unmovable. Otherwise, the cable may disconnect. In addition, do not modify the connectors, terminals and others at the ends of the cables.

2.7 Servo motor with oil seal

For the servo motor with oil seal, the oil seal prevents the entry of oil into the servo motor. Make sure to install it according in this section.
The functions have no problem even if the servo motor with oil seal may sound during operation.

(1) Pressure and oil level
Install the servo motor horizontally, and set the oil level in the gear box to be lower than the oil seal lip always. If the oil level is higher than the oil seal lip, the oil enter the servo motor and may cause a malfunction. Refer to the chapter of the servo motor series for the oil level.

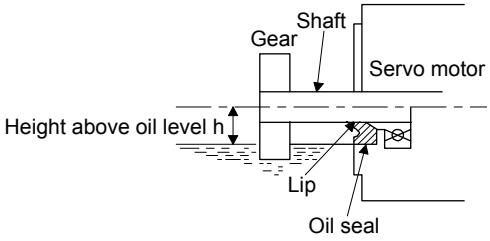

High pressure against the oil seal causes the abrasion and makes the life be short. Keep constant internal pressure by equipping a ventilator to the gear box.

(2) Temperature
High temperature against the oil seal lip makes the life be short. Avoid exposing the oil seal lip to high temperature oil since applicable temperature of the material is up to 100 °C and temperature of the oil seal lip rises within 10 °C to 15 °C at maximum rotation.

2.8 Inspection items

⚠WARNING	●Before starting maintenance and/or inspection, turn off the power and wait for 15 minutes or more (20 minutes or more for converter unit and drive unit) until the charge lamp turns off. Then, confirm that the voltage between P+ and N- (L+ and L- for converter unit and drive unit) is safe with a voltage tester and others. Otherwise, an electric shock may occur. In addition, when confirming whether the charge lamp is off or not, always confirm it from the front of the servo amplifier (converter unit). ●To avoid an electric shock, only qualified personnel should attempt inspections. For repair and parts replacement, contact your local sales office.

⚠CAUTION	●Do not perform insulation resistance test on the servo motor. Otherwise, it may cause a malfunction. ●Do not disassemble and/or repair the equipment on customer side.

It is recommended that the following points periodically be checked.

(1) Check the bearings, brake section, etc. for unusual noise.

(2) Check the cables and the like for scratches or cracks. Especially when the cable is movable, perform periodic inspection according to operating conditions.

(3) Check the servo motor shaft and coupling for misalignment.

(4) Check the power supply connector and encoder connector tightening screws for looseness.

2.9 Parts having service lives

Service lives of the following parts are listed below. However, the service lives vary depending on operation and environment. If any fault is found in the parts, they must be replaced immediately regardless of their service lives. For parts replacement, please contact your local sales office.

Part name	Life guideline
Bearings	20,000 hours to 30,000 hours
Encoder	20,000 hours to 30,000 hours
Cooling fan	20,000 hours
Oil seal	5000 hours
Reducer	10,000 hours to 20,000 hours

(1) Bearings
When the servo motor is run at rated speed under rated load, bearings should be exchanged in 20,000 to 30,000 hours as a guideline. This differs on the operating conditions. The bearings must also be changed if unusual noise or vibration is found during inspection.

(2) Oil seal (including oil seal used on the reducer)
Oil seals must be changed in 5,000 hours of operation at rated speed as a guideline. They must also be changed if oil leakage, etc. is found during inspection.
The functions have no problem even if an oil seal may sound during operation.

2.10 Restrictions when using the servo amplifiers at altitude exceeding 1000 m and up to 2000 m above sea level

Heat dissipation effects decrease in proportion to decreasing air density, and hence use the servo amplifiers with the effective load ratio and the regenerative load ratio within the following range.

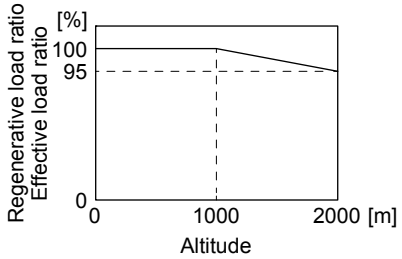

2.11 Machine accuracies

The following table indicates the machine accuracies of the servo motor around the output shaft and mounting. (except the optional products)

Accuracy [mm]	Measuring position	Flange size			
		100 × 100 or less	130 × 130	176 × 176 to 250 × 250	280 × 280 or more
Runout of flange surface to output shaft	a)	0.05	0.06	0.08	0.08
Runout of fitting OD of flange surface	b)	0.04	0.04	0.06	0.08
Runout of output shaft end	c)	0.02	0.02	0.03	0.03

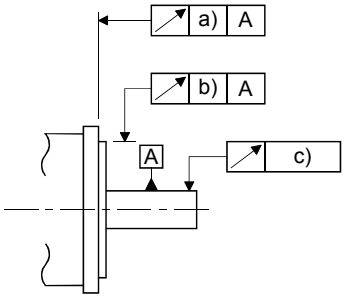

MEMO

3. CONNECTORS USED FOR SERVO MOTOR WIRING

POINT

●The IP rating indicated is the connector's protection against ingress of dust and water when the connector is connected to a servo motor. If the IP rating of the connector and servo motor vary, the overall IP rating depends on the lowest IP rating of all components.

3.1 Selection of connectors

Use the connector configuration products given in the table as the connectors for connection with the servo motor. Refer to section 3.2 to 3.4 for the compatible connector configuration products.

(1) HG-MR series and HG-KR series

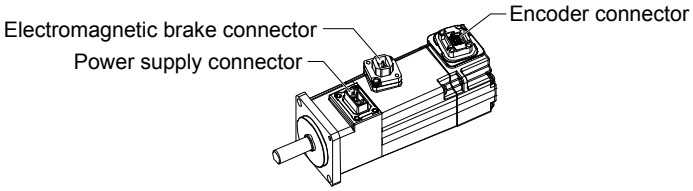

Servo motor	Wiring connector		
	For encoder	For power supply	For electromagnetic brake
HG-MR_ HG-KR_	Connector configuration A	Connector configuration B	Connector configuration C

(2) HG-SR series

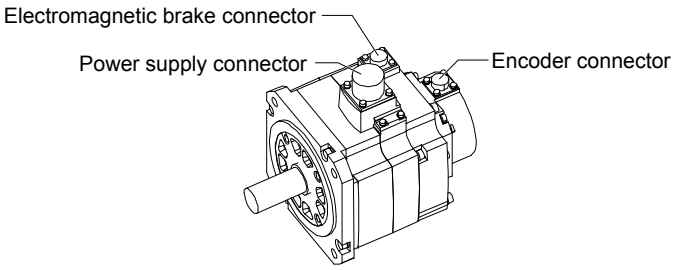

Servo motor	Wiring connector		
	For encoder	For power supply	For electromagnetic brake
HG-SR51 HG-SR81 HG-SR52(4) HG-SR102(4) HG-SR152(4)	Connector configuration D	Connector configuration E	Connector configuration F
HG-SR121 HG-SR201 HG-SR301 HG-SR202(4) HG-SR352(4) HG-SR502(4)		Connector configuration G	
HG-SR421 HG-SR702(4)		Connector configuration H	

(3) HG-JR series

HG-JR53(4) to HG-JR903(4)/HG-JR701M(4) to HG-JR15K1M(4)/HG-JR601(4) to HG-JR12K1(4)

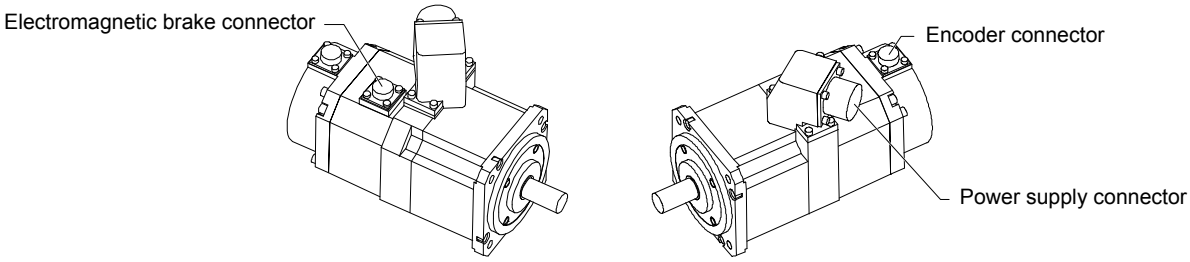

HG-JR22K1M(4) to HG-JR37K1M(4)/HG-JR45K1M4/HG-JR55K1M4/HG-JR15K1(4) to HG-JR37K1(4)

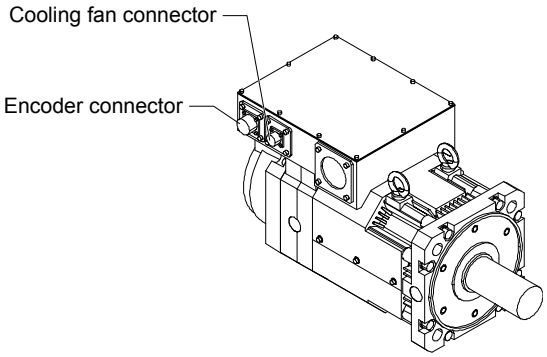

<table>
<tr><th rowspan="2">Servo motor</th><th colspan="4">Wiring connector</th></tr>
<tr><th>For encoder</th><th>For power supply</th><th>For electromagnetic brake</th><th>For cooling fan</th></tr>
<tr><td>HG-JR53(4)
HG-JR73(4)
HG-JR103(4)
HG-JR153(4)
HG-JR203(4)
HG-JR3534
HG-JR5034</td><td rowspan="3">Connector configuration D</td><td>Connector configuration E</td><td rowspan="3">Connector configuration F</td><td rowspan="4"></td></tr>
<tr><td>HG-JR353
HG-JR503</td><td>Connector configuration G</td></tr>
<tr><td>HG-JR703(4)
HG-JR903(4)</td><td rowspan="2">Connector configuration H</td></tr>
<tr><td>HG-JR701M(4)
HG-JR11K1M(4)
HG-JR15K1M(4)
HG-JR601(4)
HG-JR801(4)
HG-JR12K1(4)</td><td rowspan="2">Connector configuration K</td><td>Connector configuration J</td></tr>
<tr><td>HG-JR22K1M(4)
HG-JR30K1M(4)
HG-JR37K1M(4)
HG-JR45K1M4
HG-JR55K1M4
HG-JR15K1(4)
HG-JR20K1(4)
HG-JR25K1(4)
HG-JR30K1(4)
HG-JR37K1(4)</td><td>None (terminal box)</td><td></td><td>Connector configuration L</td></tr>
</table>

(4) HG-RR series

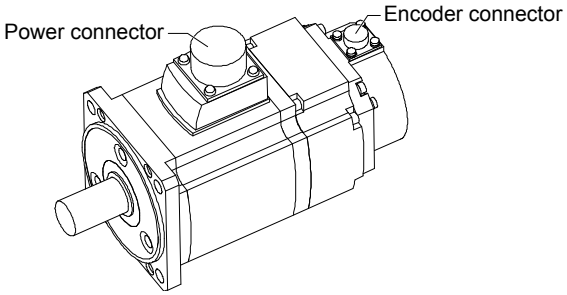

Servo motor	Wiring connector		
	For encoder	For power supply	For electromagnetic brake
HG-RR103 HG-RR153 HG-RR203	Connector configuration D	Connector configuration N	Sharing for power supply
HG-RR353 HG-RR503		Connector configuration M	

(5) HG-UR series

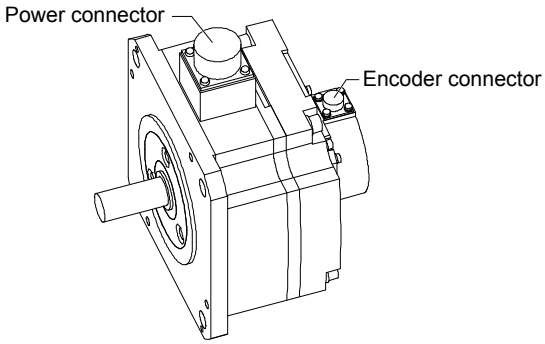

Servo motor	Wiring connector		
	For encoder	For power supply	For electromagnetic brake
HG-UR72 HG-UR152	Connector configuration D	Connector configuration N	Sharing for power supply (Note)
HG-UR202 HG-UR352 HG-UR502		Connector configuration M	Connector configuration J

Note. An electromagnetic brake connector is not required since the power connector has a pin assigned for electromagnetic brake.

(6) HG-AK series

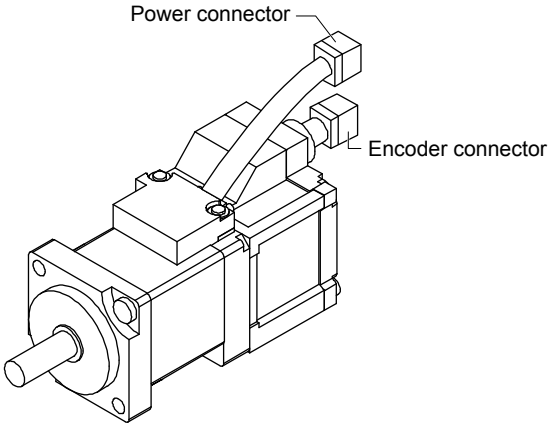

Servo motor	Wiring connector		
	For encoder	For power supply	For electromagnetic brake
HG-AK0136 HG-AK0236 HG-AK0336	Connector configuration P	Connector configuration Q	Sharing for power supply (Note)

Note. An electromagnetic brake connector is not required since the power connector has a pin assigned for electromagnetic brake.

3.2 Wiring connectors (connector configurations A/B/C)

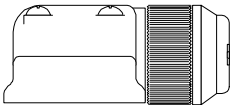

Connector configuration	Feature	Connector	Crimping tool	Servo motor encoder connector (Note)
A (for encoder)	IP65	Connector: 2174053-1 (TE Connectivity)	For ground clip: 1596970-1 For REC. contact: 1596847-1 (TE Connectivity)	1674339-1 (TE Connectivity)

Note. The other side connector

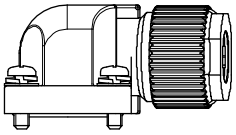

Connector configuration	Feature	Connector	Crimping tool	Servo motor power supply connector (Note)
B (for power supply)	IP65	Connector: KN4FT04SJ1-R HOOD/SOCKET INSULATOR/ BUSHING/GROUND NUT Contact: ST-TMH-S-C1B-100 (A534G) (JAE)	CT170-14-TMH5B (JAE)	JN4AT04NJ1 (JAE)

Note. The other side connector

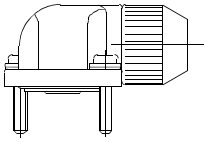

Connector configuration	Feature	Connector	Crimping tool	Servo motor electromagnetic brake connector (Note)
C (for electromagnetic brake)	IP65	Connector: JN4FT02SJ1-R HOOD/SOCKET INSULATOR/ BUSHING/GROUND NUT Contact: ST-TMH-S-C1B-100 (A534G) (JAE)	CT170-14-TMH5B (JAE)	JN4AT02PJ1 (JAE)

Note. The other side connector

3.3 Wiring connectors (connector configurations D/E/F/G/H)

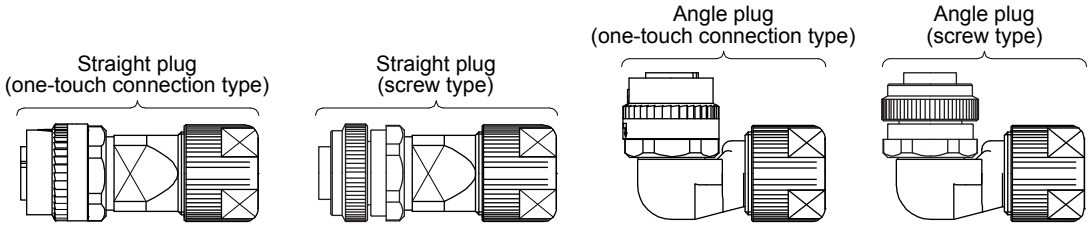

Connector configuration	Feature	Plug (DDK)					Servo motor encoder connector (Note)
		Type	Plug	Socket contact	Contact shape	Cable OD [mm] (reference)	
D (for encoder)	IP67	Straight	CMV1-SP10S-M1 (one-touch connection type) CMV1S-SP10S-M1 (screw type)	CMV1-#22ASC-S1-100	Soldering type Applicable wire size: AWG 20 or less	5.5 to 7.5	CMV1-R10P
				CMV1-#22ASC-C1-100	Crimping type Applicable wire size: AWG 24 to 20 The crimping tool (357J-53162T) is required.		
				CMV1-#22ASC-C2-100	Crimping type Applicable wire size: AWG 28 to 24 The crimping tool (357J-53163T) is required.		
			CMV1-SP10S-M2 (one-touch connection type) CMV1S-SP10S-M2 (screw type)	CMV1-#22ASC-S1-100	Soldering type Applicable wire size: AWG 20 or less	7.0 to 9.0	
				CMV1-#22ASC-C1-100	Crimping type Applicable wire size: AWG 24 to 20 The crimping tool (357J-53162T) is required.		
				CMV1-#22ASC-C2-100	Crimping type Applicable wire size: AWG 28 to 24 The crimping tool (357J-53163T) is required.		
		Angle	CMV1-AP10S-M1 (one-touch connection type) CMV1S-AP10S-M1 (screw type)	CMV1-#22ASC-S1-100	Soldering type Applicable wire size: AWG 20 or less	5.5 to 7.5	
				CMV1-#22ASC-C1-100	Crimping type Applicable wire size: AWG 24 to 20 The crimping tool (357J-53162T) is required.		
				CMV1-#22ASC-C2-100	Crimping type Applicable wire size: AWG 28 to 24 The crimping tool (357J-53163T) is required.		
			CMV1-AP10S-M2 (one-touch connection type) CMV1S-AP10S-M2 (screw type)	CMV1-#22ASC-S1-100	Soldering type Applicable wire size: AWG 20 or less	7.0 to 9.0	
				CMV1-#22ASC-C1-100	Crimping type Applicable wire size: AWG 24 to 20 The crimping tool (357J-53162T) is required.		
				CMV1-#22ASC-C2-100	Crimping type Applicable wire size: AWG 28 to 24 The crimping tool (357J-53163T) is required.		

Note. The other side connector

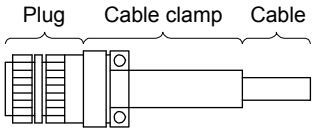

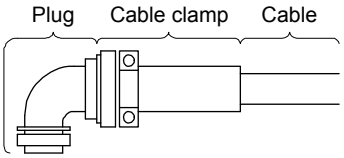

Connector configuration	Feature	Plug (DDK)		Cable clamp (DDK)		Servo motor power supply connector (Note 2)
		Type	Model	Cabel OD [mm] (reference)	Model	
E (for power supply)	IP67 EN compliant	Straight	CE05-6A18-10SD-D-BSS Applicable wire size: AWG 14 to 12	8.5 to 11	CE3057-10A-2-D	MS3102A18-10P
				10.5 to 14.1	CE3057-10A-1-D	
		Angle	CE05-8A18-10SD-D-BAS Applicable wire size: AWG 14 to 12	8.5 to 11	CE3057-10A-2-D	
				10.5 to 14.1	CE3057-10A-1-D	
	(Note 1) General environment	Straight	D/MS3106B18-10S Applicable wire size: AWG 14 to 12	14.3 or less (bushing ID)	D/MS3057-10A	
		Angle	D/MS3108B18-10S Applicable wire size: AWG 14 to 12			

Note 1. Not comply with EN.
2. The other side connector

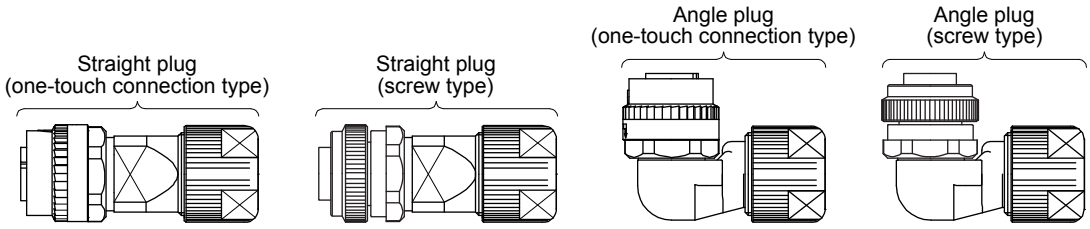

Connector configuration	Feature	Plug (DDK)					Servo motor electro-magnetic brake connector (Note)
		Type	Plug	Socket contact	Contact shape	Cable OD [mm] (reference)	
F (for electro-magnetic brake)	IP67	Straight	CMV1-SP2S-S (one-touch connection type) CMV1S-SP2S-S (screw type)	CMV1-#22BSC-S2-100	Soldering type Applicable wire size: AWG 16 or less	4.0 to 6.0	CMV1-R2P
				CMV1-#22BSC-C3-100	Crimping type Applicable wire size: AWG 20 to 16 The crimping tool (357J-53164T) is required.		
			CMV1-SP2S-M1 (one-touch connection type) CMV1S-SP2S-M1 (screw type)	CMV1-#22BSC-S2-100	Soldering type Applicable wire size: AWG 16 or less	5.5 to 7.5	
				CMV1-#22BSC-C3-100	Crimping type Applicable wire size: AWG 20 to 16 The crimping tool (357J-53164T) is required.		
			CMV1-SP2S-M2 (one-touch connection type) CMV1S-SP2S-M2 (screw type)	CMV1-#22BSC-S2-100	Soldering type Applicable wire size: AWG 16 or less	7.0 to 9.0	
				CMV1-#22BSC-C3-100	Crimping type Applicable wire size: AWG 20 to 16 The crimping tool (357J-53164T) is required.		
			CMV1-SP2S-L (one-touch connection type) CMV1S-SP2S-L (screw type)	CMV1-#22BSC-S2-100	Soldering type Applicable wire size: AWG 16 or less	9.0 to 11.6	
				CMV1-#22BSC-C3-100	Crimping type Applicable wire size: AWG 20 to 16 The crimping tool (357J-53164T) is required.		
		Angle	CMV1-AP2S-S (one-touch connection type) CMV1S-AP2S-S (screw type)	CMV1-#22BSC-S2-100	Soldering type Applicable wire size: AWG 16 or less	4.0 to 6.0	
				CMV1-#22BSC-C3-100	Crimping type Applicable wire size: AWG 20 to 16 The crimping tool (357J-53164T) is required.		
			CMV1-AP2S-M1 (one-touch connection type) CMV1S-AP2S-M1 (screw type)	CMV1-#22BSC-S2-100	Soldering type Applicable wire size: AWG 16 or less	5.5 to 7.5	
				CMV1-#22BSC-C3-100	Crimping type Applicable wire size: AWG 20 to 16 The crimping tool (357J-53164T) is required.		
			CMV1-AP2S-M2 (one-touch connection type) CMV1S-AP2S-M2 (screw type)	CMV1-#22BSC-S2-100	Soldering type Applicable wire size: AWG 16 or less	7.0 to 9.0	
				CMV1-#22BSC-C3-100	Crimping type Applicable wire size: AWG 20 to 16 The crimping tool (357J-53164T) is required.		
			CMV1-AP2S-L (one-touch connection type) CMV1S-AP2S-L (screw type)	CMV1-#22BSC-S2-100	Soldering type Applicable wire size: AWG 16 or less	9.0 to 11.6	
				CMV1-#22BSC-C3-100	Crimping type Applicable wire size: AWG 20 to 16 The crimping tool (357J-53164T) is required.		

Note. The other side connector

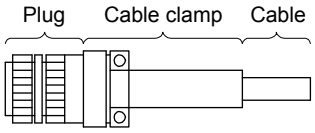

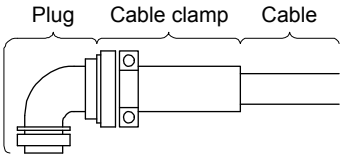

Connector configuration	Feature	Plug (DDK)		Cable clamp (DDK)		Servo motor power supply connector (Note 2)
		Type	Model	Cabel OD [mm] (reference)	Model	
G (for power supply)	IP67 EN compliant	Straight	CE05-6A22-22SD-D-BSS Applicable wire size: AWG 10 to 8	9.5 to 13	CE3057-12A-2-D	MS3102A22-22P
				12.5 to 16	CE3057-12A-1-D	
		Angle	CE05-8A22-22SD-D-BAS Applicable wire size: AWG 10 to 8	9.5 to 13	CE3057-12A-2-D	
				12.5 to 16	CE3057-12A-1-D	
	(Note 1) General environment	Straight	D/MS3106B22-22S Applicable wire size: AWG 10 to 8	15.9 or less (bushing ID)	D/MS3057-12A	
		Angle	D/MS3108B22-22S Applicable wire size: AWG 10 to 8			

Note 1. Not comply with EN.
2. The other side connector

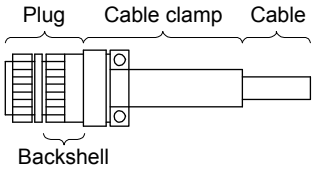

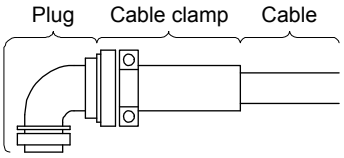

Connector configuration	Feature	Plug (DDK)		Backshell	Cable clamp (DDK)		Servo motor power supply connector (Note 2)
		Type	Model	Model	Cabel OD [mm] (reference)	Model	
H (for power supply)	IP67 EN compliant	Straight	(Note 3) CE05-6A32-17SD-D Applicable wire size: AWG 4	CE05-32BS-S-D-OB	30 to 32.5	CE3057-24A-1-D	MS3102A32-17P
					27 to 29.6	CE3057-24A-2-D	
			CE05-6A32-17SD-D-BSS Applicable wire size: AWG 6 to 4		22 to 23.8	CE3057-20A-1-D	
		Angle	CE05-8A32-17SD-D-BAS Applicable wire size: AWG 6 to 4				
	(Note 1) General environment	Straight	D/MS3106B32-17S Applicable wire size: AWG 6 to 4		23.8 or less (bushing ID)	D/MS3057-20A	
		Angle	D/MS3108B32-17S Applicable wire size: AWG 6 to 4				

Note 1. Not comply with EN.
2. The other side connector
3. This connector is used only when the outer diameter of the cable used for HG-JR11K1M(4) and HG-JR15K1M(4) exceeds 23.8 mm.

3.4 Wiring connectors (connector configurations J/K/L/M/N/P/Q)

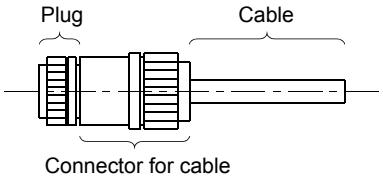

IP67 compatible

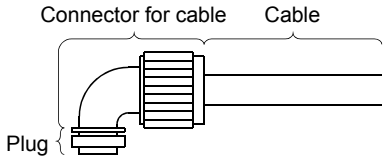

IP67 compatible

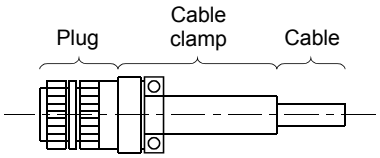

General environmental

Connector configuration	Feature	Cable-side connector					Servo motor electromagnetic brake connector (Note 2)
		Plug (DDK)	Connector for cable				
			Type	Manufacturer	Cable OD [mm] (reference)	Model	
J (for electro-magnetic brake)	IP67 EN UL/CSA compliant	D/MS3106A10SL-4S (D190) Applicable wire size: AWG 22 to 16	Straight	Nippon Flex	4 to 8	ACS-08RL-MS10F	MS3102A10SL-4P
					8 to 12	ACS-12RL-MS10F	
				Daiwa Dengyo	5 to 8.3	YSO10-5 to 8	
			Angle	Nippon Flex	4 to 8	ACA-08RL-MS10F	
					8 to 12	ACA-12RL-MS10F	
				Daiwa Dengyo	5 to 8.3	YLO10-5 to 8	
	(Note1) General environment	D/MS3106A10SL-4S Applicable wire size: AWG 22 to 16	Straight		5.6 or less (bushing ID)	D/MS3057-4A	

Note 1. Not comply with EN.
2. The connector to be mated.

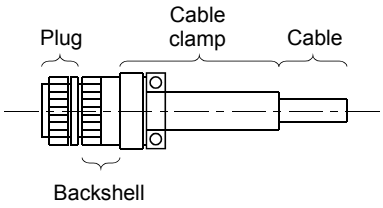

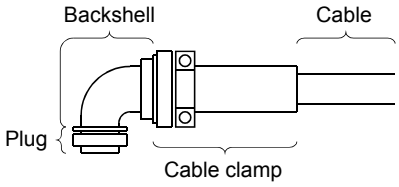

Connector configuration	Feature	Plug (DDK)		Backshell (DDK)	Cable clamp (DDK)		Servo motor encoder connector (Note 2)
		Type	Model		Cable OD [mm]	Model	
K (for encoder)	IP67 EN compliant	Straight	D/MS3106A20-29S (D190)	CE02-20BS-S-D	6.8 to 10	CE3057-12A-3-D	D/MS3102A20-29P
		Angle		CE-20BA-S-D			
	(Note 1) General environment	Straight	D/MS3106B20-29S		15.9 or less (bushing ID)	D/MS3057-12A	
		Angle	D/MS3108B20-29S				

Note 1. Not comply with EN.
2. The connector to be mated.

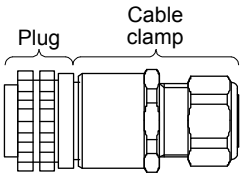

Connector configuration	Feature	Plug (DDK)		Cable clamp		Servo motor cooling fan connector (Note)
		Type	Model	Cable OD [mm] (reference)	Model	
L (for cooling fan)	IP67 EN compliant	Straight	CE05-6A14S-2SD-D Applicable wire size: AWG 22 to 16	8.3 to 11.3	YSO14-9 to 11 (Daiwa Dengyo)	CE05-2A14S-2P

Note. The connector to be mated.

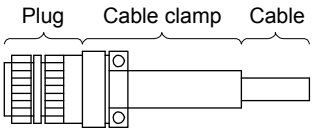

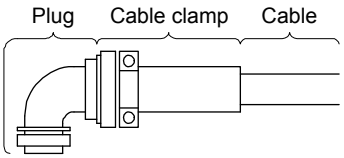

Connector configuration	Feature	Plug (DDK)		Cable clamp (DDK)		Servo motor power supply connector (Note)
		Type	Model	Cable OD [mm] (reference)	Model	
M (for power supply)	IP65 EN UL/CSA compliant	Straight	CE05-6A24-10SD-D-BSS Applicable wire size: AWG 10 to 8	13 to 15.5	CE3057-16A-2-D	CE05-2A24-10P
				15 to 19.1	CE3057-16A-1-D	
		Angle	CE05-8A24-10SD-D-BAS Applicable wire size: AWG 10 to 8	13 to 15.5	CE3057-16A-2-D	
				15 to 19.1	CE3057-16A-1-D	
	General environment UL/CSA compliant	Straight	D/MS3106B24-10S Applicable wire size: AWG 10 to 8	19.1 or less (bushing ID)	D/MS3057-16A	
		Angle	D/MS3108B24-10S Applicable wire size: AWG 10 to 8			

Note. The connector to be mated.

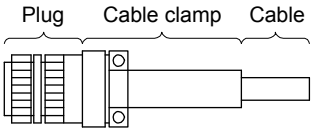

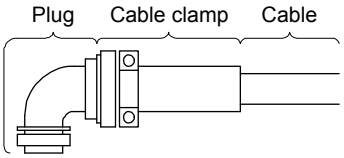

Connector configuration	Feature	Plug (DDK)		Cable clamp (DDK)		Servo motor power supply connector (Note)
		Type	Model	Cable OD [mm] (reference)	Model	
N (for power supply)	IP65 EN UL/CSA compliant	Straight	CE05-6A22-23SD-D-BSS Applicable wire size: AWG 14 to 12	9.5 to 13	CE3057-12A-2-D	CE05-2A22-23P
				12.5 to 16	CE3057-12A-1-D	
		Angle	CE05-8A22-23SD-D-BAS Applicable wire size: AWG 14 to 12	9.5 to 13	CE3057-12A-2-D	
				12.5 to 16	CE3057-12A-1-D	
	General environment UL/CSA compliant	Straight	D/MS3106B22-23S Applicable wire size: AWG 14 to 12	15.9 or less (bushing ID)	D/MS3057-12A	
		Angle	D/MS3108B22-23S Applicable wire size: AWG 14 to 12			

Note. The connector to be mated.

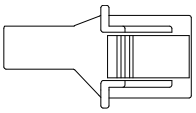

Connector configuration	Feature	Connector (JST)					Servo motor encoder connector
		Tab housing	Tab contact	Applicable wire size	Insulator OD [mm]	Crimping tool	
P (for encoder)	General environment (Note 1)	J21DPM-10V-KX	SJ2M-01GF-M1.0N	0.20 mm^2 to 0.50 mm^2 (AWG 24 to 20)	1.11 to 1.53	YRS-8861	J21DF-10V-KX-L

Note. Not comply with EN.

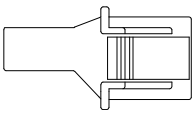

Connector configuration	Feature	Connector (JST)					Servo motor power connector
		Tab housing	Tab contact	Applicable wire size	Insulator OD [mm]	Crimping tool	
Q (for power supply)	General environment (Note 1)	J21DPM-06V-KX	SJ2M-21GF-M1.0N	0.30 mm^2 to 0.75 mm^2	1.30 to 1.90	YRF-1120	J21DF-06V-KX-L

Note. Not comply with EN.

4. CONNECTION OF SERVO AMPLIFIER AND SERVO MOTOR

⚠WARNING

- Any person who is involved in wiring should be fully competent to do the work.
- Ground the servo motor securely.
- Do not attempt to wire the servo motor until it has been mounted. Otherwise, it may cause an electric shock.
- The cables should not be damaged, stressed, loaded, or pinched. Otherwise, it may cause an electric shock.
- To avoid an electric shock, insulate the connections of the power supply terminals.

⚠CAUTION

- Wire the equipment correctly and securely. Otherwise, the servo motor may operate unexpectedly, resulting in injury.
- Connect cables to the correct terminals. Otherwise, a burst, damage, etc. may occur.
- Ensure that polarity (+/-) is correct. Otherwise, a burst, damage, etc. may occur.
- Do not install a power capacitor, surge killer or radio noise filter (FR-BIF-(H) option) with the power line of the servo motor.
- Do not modify the equipment.
- Connect the servo amplifier (converter unit) power output (U, V, and W) to the servo motor power input (U, V, and W) directly. Do not let a magnetic contactor, etc. intervene. Otherwise, it may cause a malfunction.

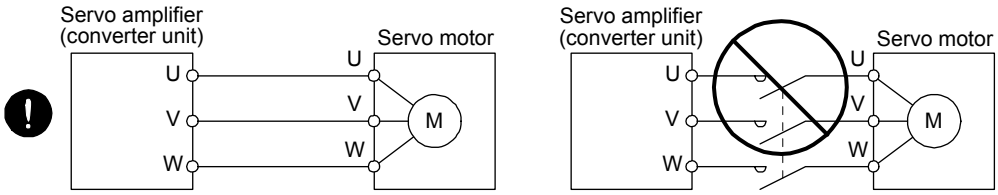

POINT

- We recommend using HIV wires to connect the servo amplifier (converter unit) to the servo motor. Therefore, recommended wire sizes may different from those of the used wires for the previous servo motors.
- When you use a drive unit, "servo amplifier" explained above will be "drive unit".

4.1 Connection instructions

⚠CAUTION

- To avoid a malfunction, connect the wires to the correct phase terminals (U, V, and W) of the servo amplifier (converter unit) and servo motor.
- Do not connect AC power supply directly to the servo motor. Otherwise, it may cause a malfunction.
- Do not use the 24 V DC interface power supply for the electromagnetic brake. Always use the power supply designed exclusively for the electromagnetic brake. Otherwise, it may cause a malfunction.

POINT

- Refer to chapter 5 for the selection of the encoder cable.
- Refer to the chapter of the servo motor series for the selection of a surge absorber for the electromagnetic brake.

For grounding, connect the grounding lead wire from the servo motor to the protective earth (PE) terminal of the servo amplifier (converter unit), and then connect the wire from the servo amplifier (converter unit) to the ground via the protective earth of the cabinet. Do not connect the wire directly to the protective earth of the cabinet.

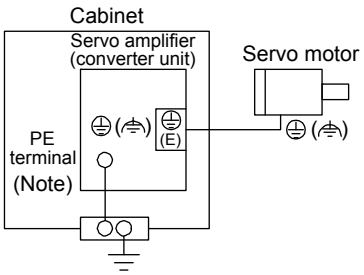

Note. The number of PE terminals of the servo amplifier (converter unit) differs depending on the amplifier types.

4.2 Wiring

4.2.1 HG-MR series/HG-KR series servo motor

(1) Connection with MR-J4 1-axis servo amplifier

(a) Servo motor power supply cable wiring diagrams

1) When cable length is 10 m or less

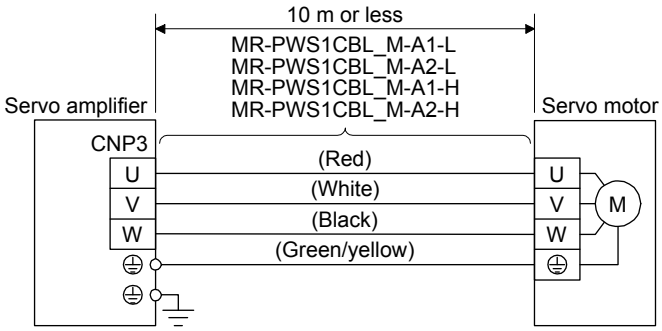

2) When cable length exceeds 10 m

Fabricate an extension cable as shown below. In addition, the motor power supply cable should be within 2 m.

Refer to section 4.3 for the wire used for the extension cable.

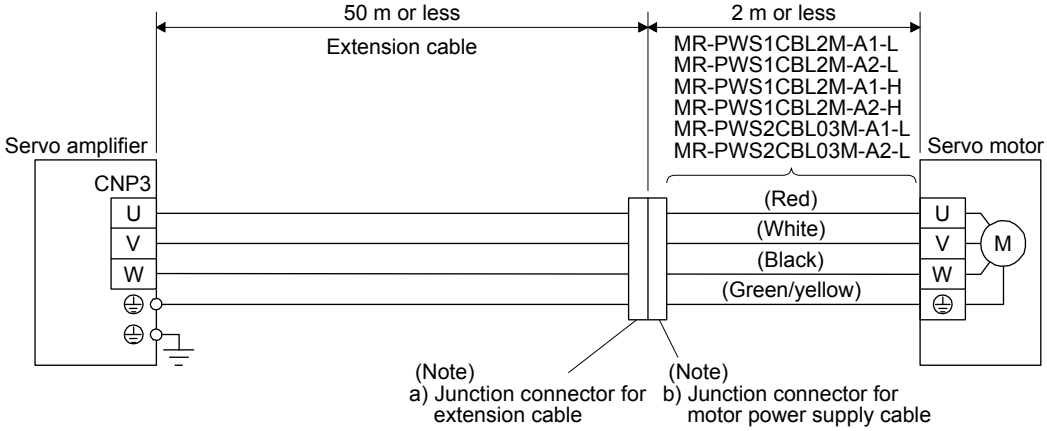

Note. Use of the following connectors is recommended when ingress protection (IP65) is necessary.

Junction connector	Description	IP rating
a) Junction connector for extension cable	Connector: RM15WTPZ-4P(71) Cord clamp: JR13WCC-5(72) (Hirose Electric) Numeral changes depending on the cable OD.	IP65
b) Junction connector for motor power supply cable	Connector: RM15WTJZ-4S(71) Cord clamp: JR13WCC-8(72) (Hirose Electric) Numeral changes depending on the cable OD.	IP65

(b) Electromagnetic brake cable wiring diagrams

1) When cable length is 10 m or less

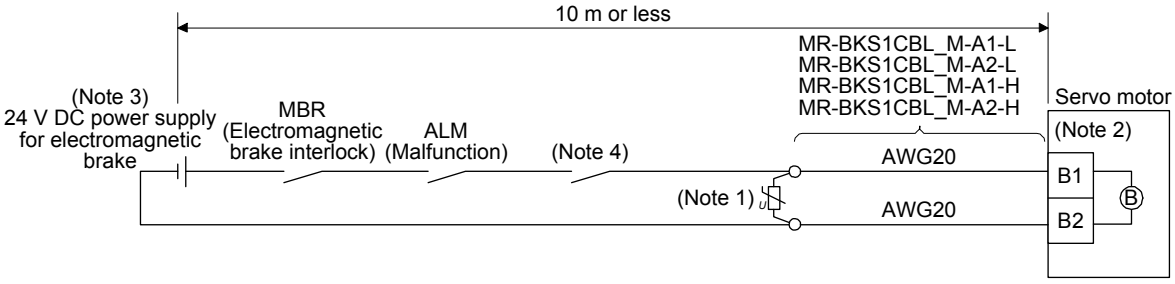

Note 1. Connect a surge absorber as close to the servo motor as possible.
2. There is no polarity in electromagnetic brake terminals (B1 and B2).
3. Do not use the 24 V DC interface power supply for the electromagnetic brake.
4. Create the circuit in order to shut off by interlocking with the emergency stop switch.

When fabricating the electromagnetic brake cable MR-BKS1CBL_M-_, refer to section 5.5 and 5.6.

2) When cable length exceeds 10 m

Fabricate an extension cable as shown below. In addition, the electromagnetic brake cable should be within 2 m.

Refer to section 4.3 for the wire used for the extension cable.

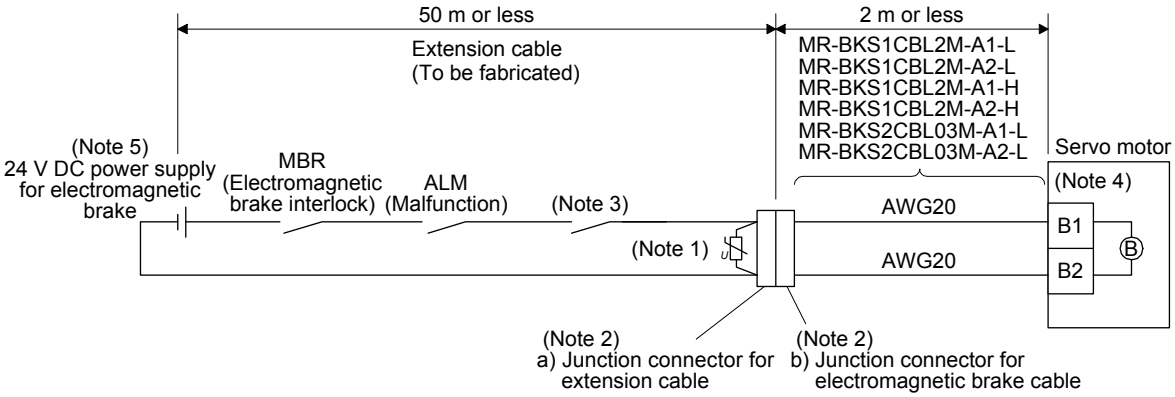

Note 1. Connect a surge absorber as close to the servo motor as possible.
2. Use of the following connectors is recommended when ingress protection (IP65) is necessary.

Junction connector	Description	IP rating
a) Junction connector for extension cable	CM10-CR2P-*(DDK) └ Wire size: S, M, L	IP65
b) Junction connector for electromagnetic brake cable	CMV1-SP2S-*(DDK) └ Wire size: S, M1, M2, L	IP65

3. Create the circuit in order to shut off by interlocking with the emergency stop switch.
4. There is no polarity in electromagnetic brake terminals (B1 and B2).
5. Do not use the 24 V DC interface power supply for the electromagnetic brake.

(2) Connection with MR-J4 multi-axis servo amplifier

(a) Servo motor power supply cable wiring diagrams

1) When cable length is 10 m or less

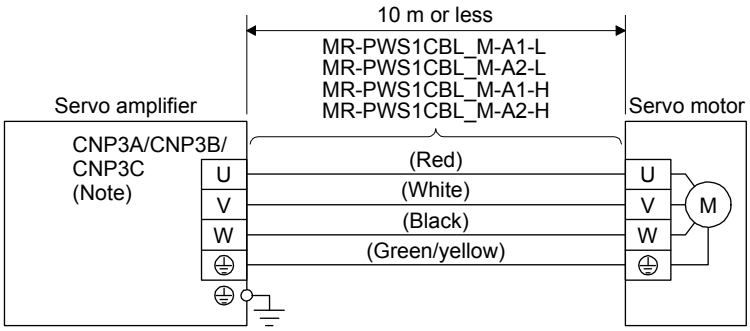

Note. CNP3 is for the MR-J4 3-axis servo amplifier.

2) When cable length exceeds 10 m

Fabricate an extension cable as shown below. In addition, the motor power supply cable should be within 2 m.

Refer to section 4.3 for the wire used for the extension cable.

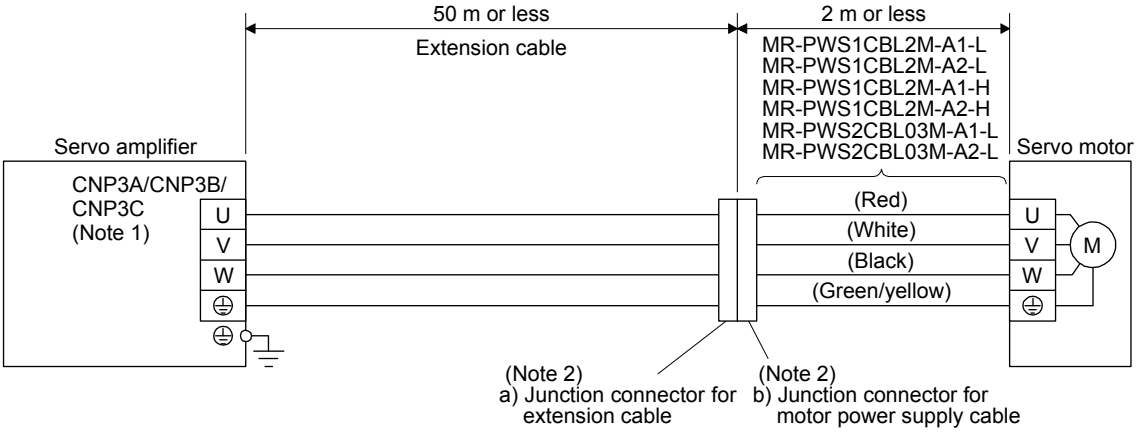

Note 1. CNP3 is for the MR-J4 3-axis servo amplifier.

2. Use of the following connectors is recommended when ingress protection (IP65) is necessary.

Junction connector	Description	IP rating
a) Junction connector for extension cable	Connector: RM15WTPZ-4P(71) Cord clamp: JR13WCC-5(72) (Hirose Electric) Numeral changes depending on the cable OD.	IP65
b) Junction connector for motor power supply cable	Connector: RM15WTJZ-4S(71) Cord clamp: JR13WCC-8(72) (Hirose Electric) Numeral changes depending on the cable OD.	IP65

(b) Electromagnetic brake cable wiring diagrams

1) When cable length is 10 m or less

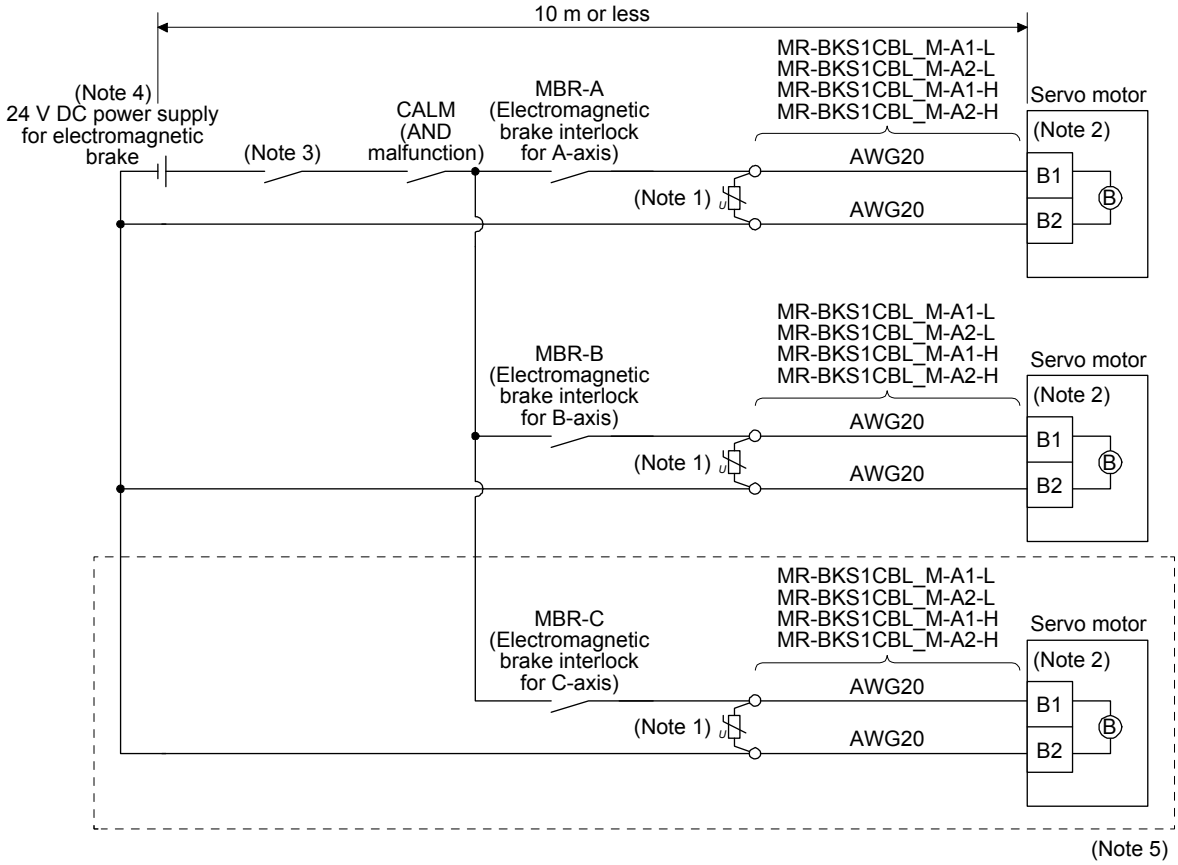

Note 1. Connect a surge absorber as close to the servo motor as possible.
2. There is no polarity in electromagnetic brake terminals (B1 and B2).
3. Create the circuit in order to shut off by interlocking with the emergency stop switch.
4. Do not use the 24 V DC interface power supply for the electromagnetic brake.
5. This connection is for the MR-J4 3-axis servo amplifier.

When fabricating the electromagnetic brake cable MR-BKS1CBL_M-_, refer to section 5.5 and 5.6.

2) When cable length exceeds 10 m
Fabricate an extension cable as shown below. In addition, the electromagnetic brake cable should be within 2 m.
Refer to section 4.3 for the wire used for the extension cable.

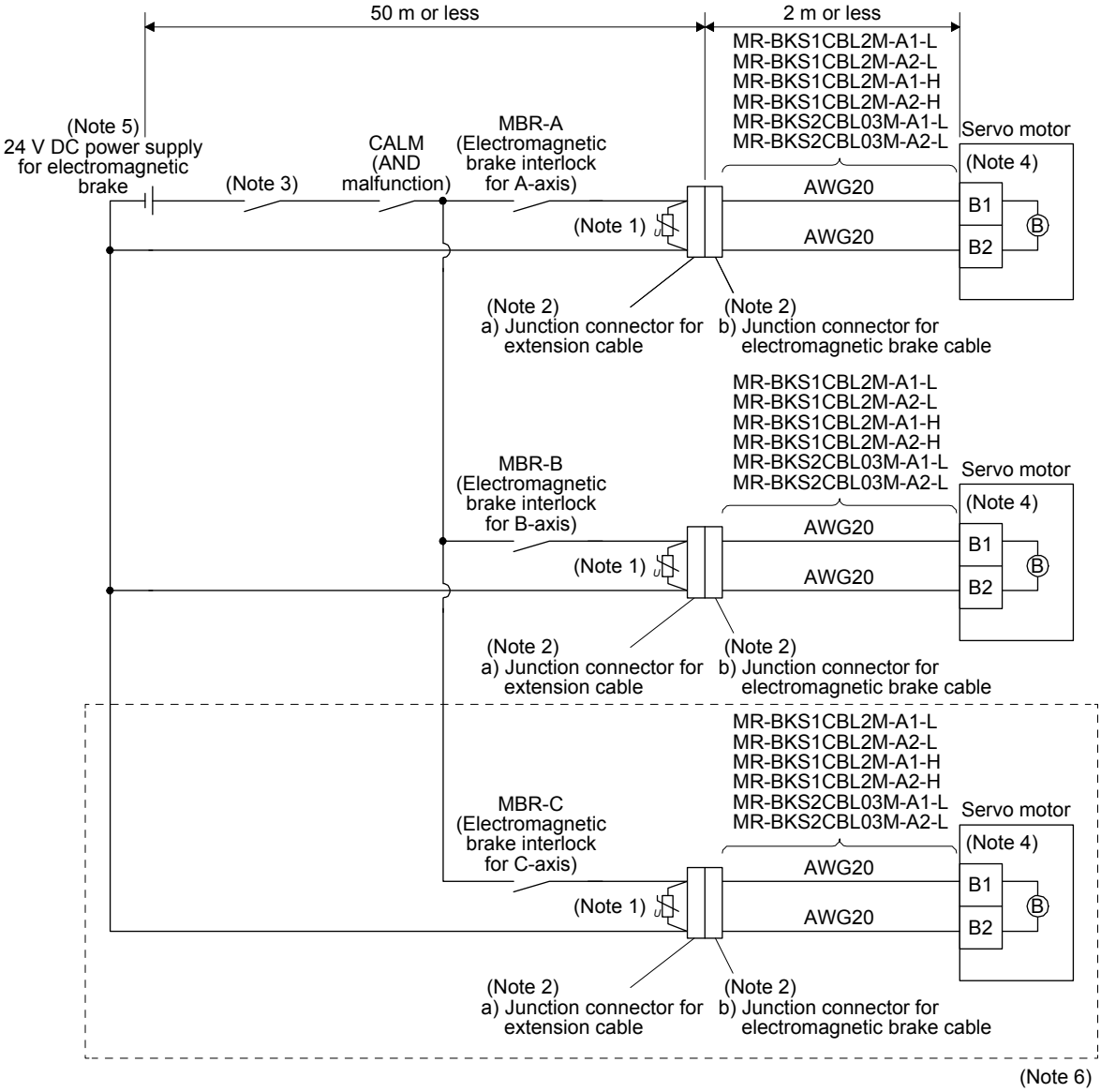

Note 1. Connect a surge absorber as close to the servo motor as possible.
2. Use of the following connectors is recommended when ingress protection (IP65) is necessary.

Junction connector	Description	IP rating
a) Junction connector for extension cable	CM10-CR2P-*(DDK) └ Wire size: S, M, L	IP65
b) Junction connector for electromagnetic brake cable	CMV1-SP2S-*(DDK) └ Wire size: S, M1, M2, L	IP65

3. Create the circuit in order to shut off by interlocking with the emergency stop switch.
4. There is no polarity in electromagnetic brake terminals (B1 and B2).
5. Do not use the 24 V DC interface power supply for the electromagnetic brake.
6. This connection is for the MR-J4 3-axis servo amplifier.

4.2.2 HG-SR series/HG-JR series/HG-RR series/HG-UR series servo motor

Refer to section 4.3 for the wires used for wiring.

(1) Wiring diagrams

(a) Connection with MR-J4 1-axis servo amplifier

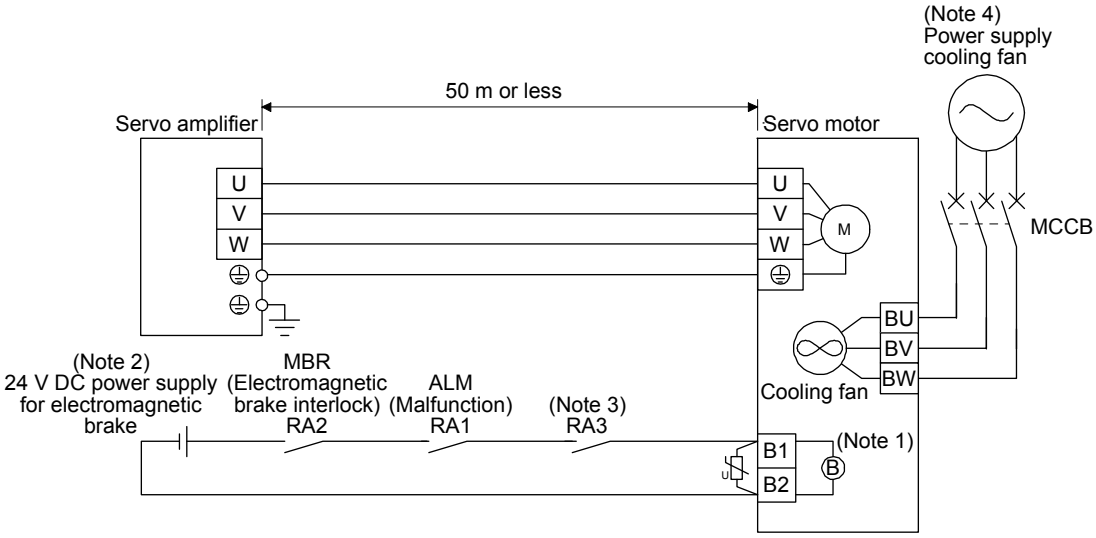

Note 1. There is no polarity in electromagnetic brake terminals (B1 and B2).

2. Do not use the 24 V DC interface power supply for the electromagnetic brake.

3. Create the circuit in order to shut off by interlocking with the emergency stop switch.

4. Refer to the chapter of the servo motor series for the cooling fan power supply.

(b) Connection with MR-J4 multi-axis servo amplifier

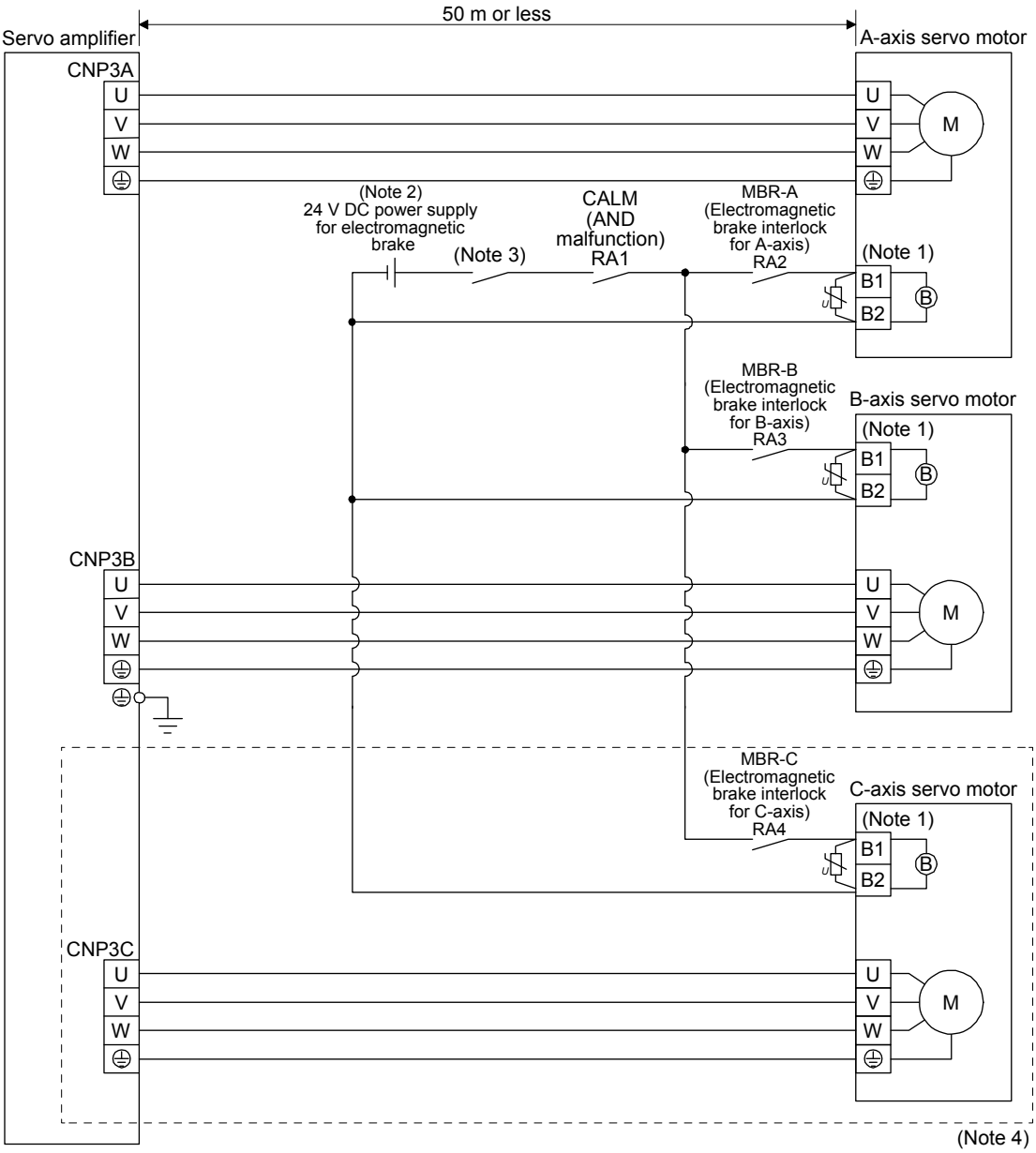

Note 1. There is no polarity in electromagnetic brake terminals (B1 and B2).
2. Do not use the 24 V DC interface power supply for the electromagnetic brake.
3. Create the circuit in order to shut off by interlocking with the emergency stop switch.
4. This connection is for the MR-J4 3-axis servo amplifier.

(2) Servo motor terminal section

The following table shows the servo motor terminal section. For details of the connectors, refer to (3) of this section. For details of the terminal box, refer to (4) of this section.

The connector fitting the servo motor is prepared as options. Refer to chapter 5 for details of the options. For types other than those prepared as options, refer to chapter 3.

(a) HG-SR series

Servo motor	Servo motor terminal section		
	Encoder	Power	Electromagnetic brake
HG-SR52(4) HG-SR102(4) HG-SR152(4) HG-SR51 HG-SR81	Connector A	Connector C	Connector H
HG-SR202(4) HG-SR352(4) HG-SR502(4) HG-SR121 HG-SR201 HG-SR301		Connector D	
HG-SR702(4) HG-SR421		Connector E	

(b) HG-JR series

Servo motor	Servo motor terminal section			
	Encoder	Power	Electromagnetic brake	Cooling fan
HG-JR53(4) HG-JR73(4) HG-JR103(4) HG-JR153(4) HG-JR203(4) HG-JR3534 HG-JR5034	Connector A	Connector C	Connector H	
HG-JR353 HG-JR503		Connector D		
HG-JR703(4) HG-JR903(4)		Connector E		
HG-JR701M(4) HG-JR11K1M(4) HG-JR15K1M(4) HG-JR601(4) HG-JR801(4) HG-JR12K1(4)	Connector B		Connector J	
HG-JR22K1M(4) HG-JR30K1M(4) HG-JR37K1M(4) HG-JR45K1M4 HG-JR55K1M4 HG-JR15K1(4) HG-JR20K1(4) HG-JR25K1(4) HG-JR30K1(4) HG-JR37K1(4)	Connector L	Terminal box		Connector K

(c) HG-RR series

Servo motor	Servo motor terminal section		
	Encoder	Power	Electromagnetic brake
HG-RR103 HG-RR153 HG-RR203	Connector A	Connector F	The connector for power is shared
HG-RR353 HG-RR503		Connector G	

(d) HG-UR series

Servo motor	Servo motor terminal section		
	Encoder	Power	Electromagnetic brake
HG-UR72 HG-UR152	Connector A	Connector F	The connector for power is shared
HG-UR202 HG-UR352 HG-UR502		Connector G	Connector J

(3) Details of servo motor-side connectors

The followings show the encoder connector, power connector, electromagnetic brake connector, and cooling fan connector viewed from the connection side.

Connector A
Encoder connector
CMV1-R10P

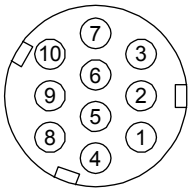

Terminal No.	Signal
1	MR
2	MRR
3	
4	BAT
5	LG
6	
7	
8	P5
9	
10	SHD

Connector B
Encoder connector
MS3102A20-29P

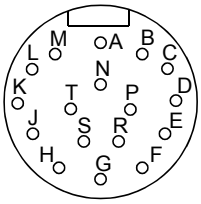

Pin	Signal
A	
B	
C	MR
D	MRR
E	
F	BAT
G	LG
H	
J	
K	
L	
M	
N	SHD
P	
R	LG
S	P5
T	

Connector C
Power supply connector
MS3102A18-10P

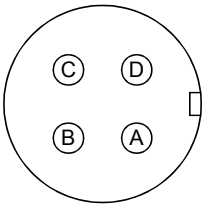

Terminal No.	Signal
A	U
B	V
C	W
D	⏚ (PE)

Connector D

Power supply connector

MS3102A22-22P

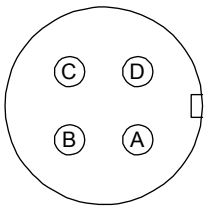

Terminal No.	Signal
A	U
B	V
C	W
D	⏚ (PE)

Connector E

Power supply connector

MS3102A32-17P

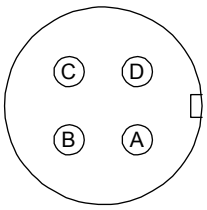

Terminal No.	Signal
A	U
B	V
C	W
D	⏚ (PE)

Connector F

Power supply connector

CE05-2A22-23P

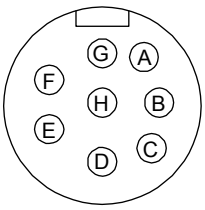

Terminal No.	Signal
A	U
B	V
C	W
D	⏚ (PE)
E	
F	
G	B1 (Note)
H	B2 (Note)

Note. For the motor with an electromagnetic brake, supply electromagnetic brake power (24 V DC). There is no polarity.

Connector G

Power supply connector

CE05-2A24-10P

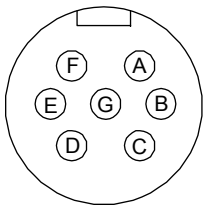

Terminal No.	Signal
A	U
B	V
C	W
D	⏚ (PE)
E	B1 (Note)
F	B2 (Note)
G	

Note. For the motor with an electromagnetic brake, supply electromagnetic brake power (24 V DC). There is no polarity.

Connector H

Electromagnetic brake connector

CMV1-R2P

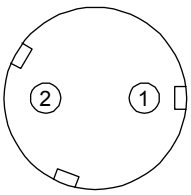

Terminal No.	Signal
1	B1 (Note)
2	B2 (Note)

Note. For the motor with an electromagnetic brake, supply electromagnetic brake power (24 V DC). There is no polarity.

Connector J

Electromagnetic brake connector

MS3102A10SL-4P

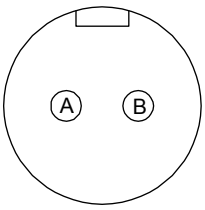

Terminal No.	Signal
A	B1 (Note)
B	B2 (Note)

Note. For the motor with an electromagnetic brake, supply electromagnetic brake power (24 V DC). There is no polarity.

Connector K

Cooling fan connector

CE05-2A14S-2P

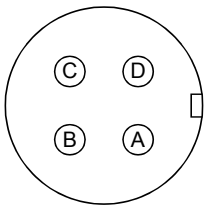

Terminal No.	Signal
A	BU (Note)
B	BV (Note)
C	BW (Note)
D	

Note. Refer to the chapter of the servo motor series for the specifications of the power supplied to the cooling fan.

Connector L

Encoder connector

MS3102A20-29P

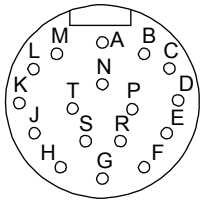

Pin	Signal
A	
B	
C	MR
D	MRR
E	
F	BAT
G	LG
H	
J	
K	THM1
L	THM2
M	
N	SHD
P	
R	LG
S	P5
T	

(4) Terminal box inside

HG-JR22K1M(4) to HG-JR37K1M(4)/HG-JR45K1M4/HG-JR55K1M4/HG-JR15K1(4) to HG-JR37K1(4)

> POINT
>
> ●The terminal box of the HG-JR22K1M(4) servo motor has been changed since September 2014. Refer to app. 9 for the terminal box detail diagram before change.

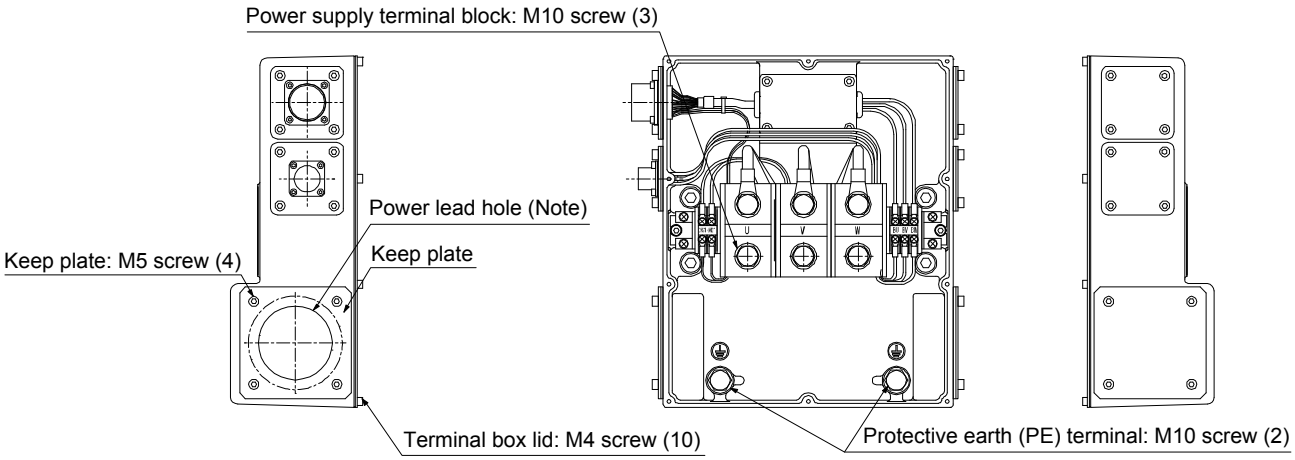

Note. Provide measures to prevent oil, water, dust and dirt from entering the servo motor through the power lead hole.

4.2.3 HG-AK series servo motor

(1) Connection with MR-J4-03A6(-RJ) servo amplifier

(a) Motor power cable wiring diagram (without electromagnetic brake)

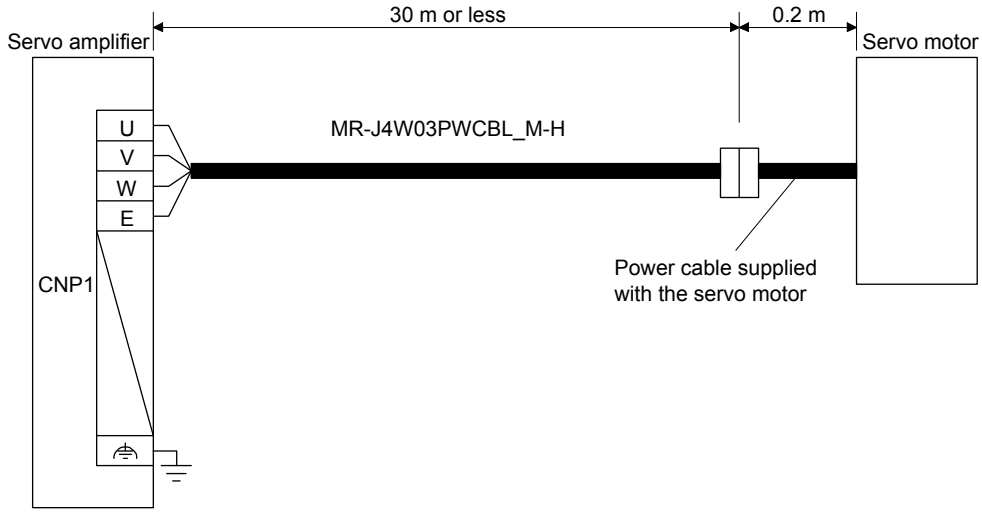

(b) Motor power cable wiring diagram (with electromagnetic brake)

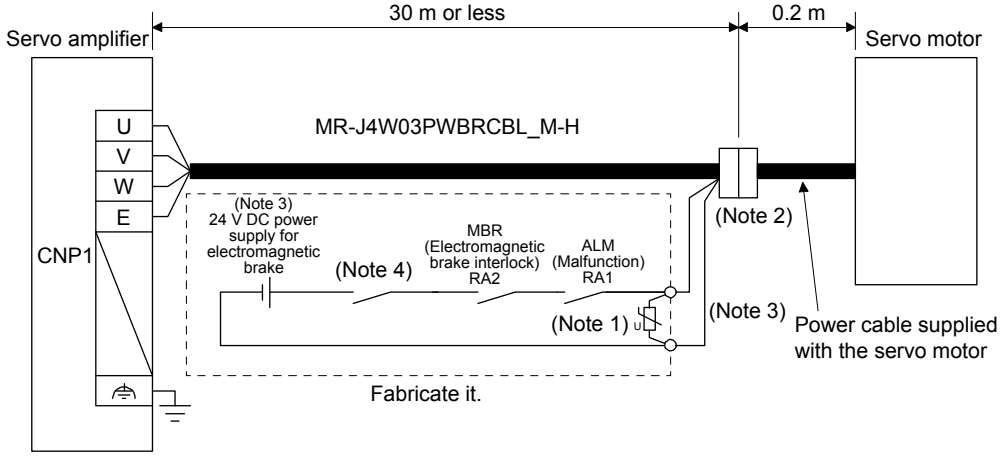

Note 1. Connect a surge absorber as close to the servo motor as possible.
2. There is no polarity in electromagnetic brake terminals (B1 and B2).
3. Do not use the 24 V DC interface power supply for the electromagnetic brake.
4. Create the circuit in order to shut off by interlocking with the emergency stop switch.

(2) Connection with MR-J4W2-0303B6 servo amplifier

(a) Motor power cable wiring diagram (without electromagnetic brake)

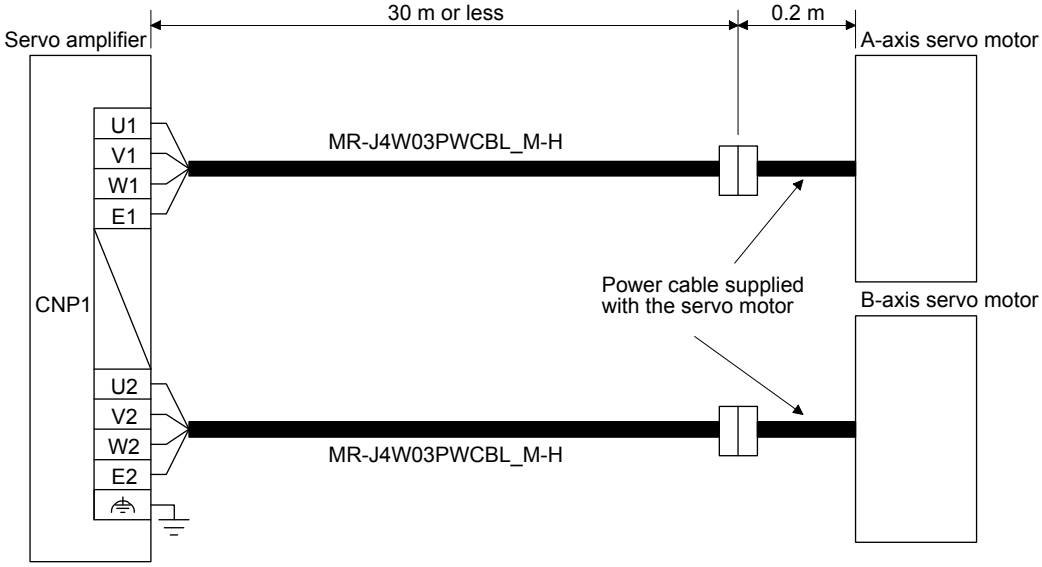

(b) Motor power cable wiring diagram (with electromagnetic brake)

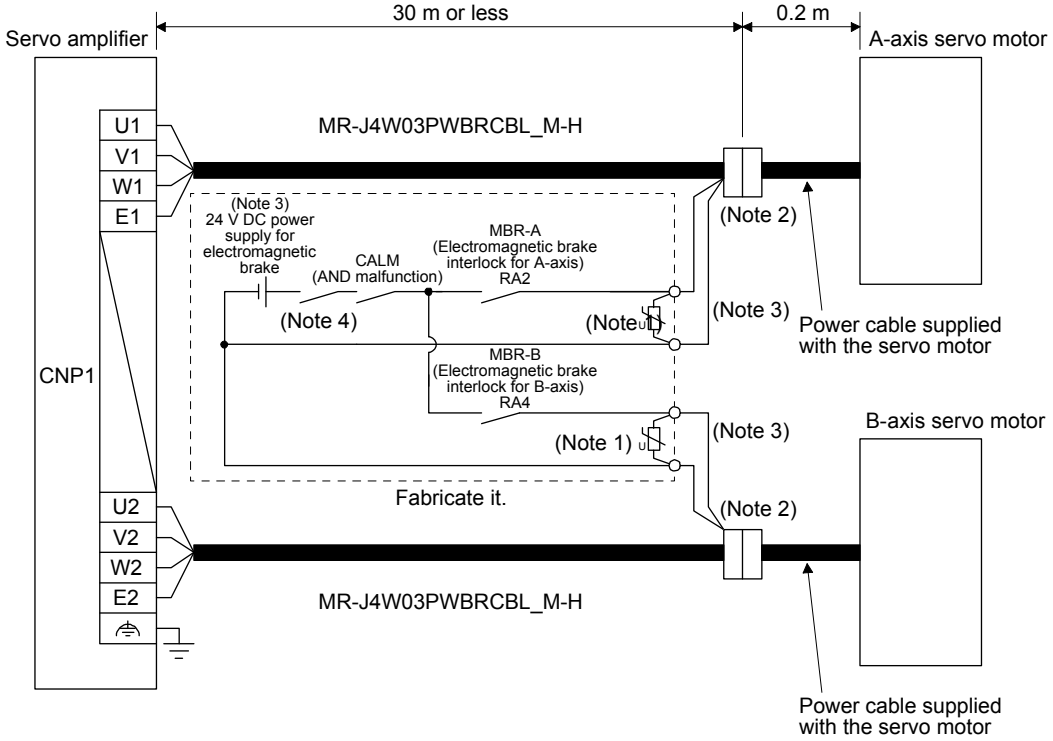

Note 1. Connect a surge absorber as close to the servo motor as possible.
2. There is no polarity in electromagnetic brake terminals (B1 and B2).
3. Do not use the 24 V DC interface power supply for the electromagnetic brake.
4. Create the circuit in order to shut off by interlocking with the emergency stop switch.

4.3 Selection example of wires

POINT

- Wires indicated in this section are separated wires. When using a cable for power line (U, V, and W) between the servo amplifier and servo motor, use a 600 V grade EP rubber insulated chloroprene sheath cab-tire cable (2PNCT). For selection of cables, refer to app. 6.
- To comply with the UL/CSA standard, use the wires shown in app. 4 for wiring. To comply with other standards, use a wire that is complied with each standard.
- Selection condition of wire size is as follows.
  Construction condition: Single wire set in midair
  Wire length: 30 m or less

The following diagram shows the wires used for wiring. Use the wires given in this section or equivalent.

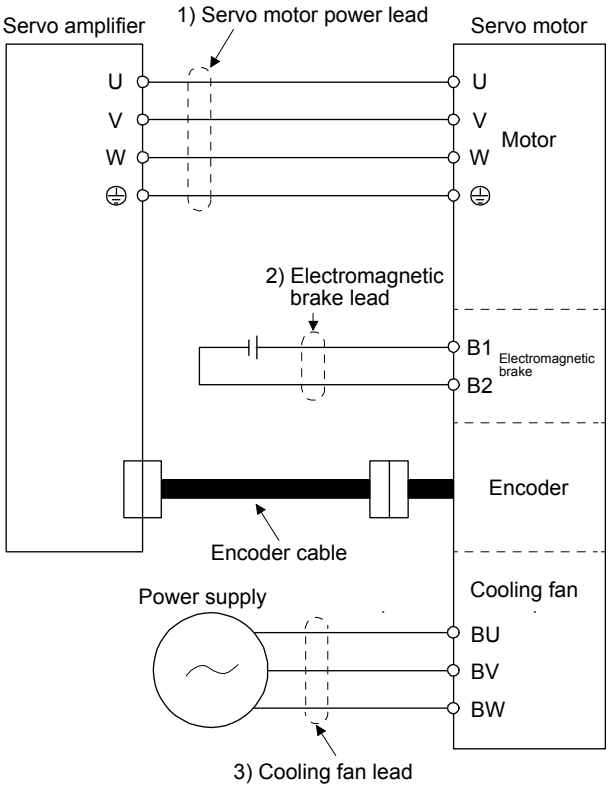

When using the 600 V Grade heat-resistant polyvinyl chloride insulated wire (HIV wire)
Selection example of wire size when using HIV wires is indicated below.

(1) HG-MR series and HG-KR series

Servo motor	Wire [mm^2]	
	1) U/V/W/⏚	2) B1/B2
HG-MR053	0.75 (AWG 18) (Note 1, 2)	0.5 (AWG 20) (Note 1)
HG-MR13		
HG-MR23		
HG-MR43		
HG-MR73		
HG-KR053		
HG-KR13		
HG-KR23		
HG-KR43		
HG-KR73		

Note 1. It is for wire length of 10 m or less. When fabricating an extension cable, use 1.25 mm^2 (AWG 16).
2. For the motor power connector wiring, use fluorine resin wire of 0.75 mm^2 (AWG 18).

(2) HG-SR series

Servo motor	Wire [mm^2]	
	1) U/V/W/⏚	2) B1/B2
HG-SR51	1.25 (AWG 16)	1.25 (AWG 16)
HG-SR81		
HG-SR121	2 (AWG 14)	
HG-SR201		
HG-SR301	3.5 (AWG 12)	
HG-SR421	5.5 (AWG 10) (Note)	
HG-SR52	1.25 (AWG 16)	
HG-SR102		
HG-SR152	2 (AWG 14)	
HG-SR202		
HG-SR352	3.5 (AWG 12)	
HG-SR502	5.5 (AWG 10) (Note)	
HG-SR702	8 (AWG 8) (Note)	
HG-SR524	1.25 (AWG 16)	
HG-SR1024		
HG-SR1524	2 (AWG 14)	
HG-SR2024		
HG-SR3524		
HG-SR5024	3.5 (AWG 12) (Note)	
HG-SR7024	5.5 (AWG 10) (Note)	

Note. Refer to each servo amplifier instruction manual for crimp terminals and crimping tools used for connection with the servo amplifier.

(3) HG-JR series

(a) 3000 r/min series

<table>
<tr><th rowspan="3">Servo motor</th><th colspan="3">Wire [mm^2]</th></tr>
<tr><th colspan="2">1) U/V/W/⏚</th><th rowspan="2">2) B1/B2</th></tr>
<tr><th>Standard</th><th>When the maximum torque is 400% (Note 2)</th></tr>
<tr><td>HG-JR53</td><td rowspan="3">1.25 (AWG 16)</td><td rowspan="3">1.25 (AWG 16)</td><td rowspan="15">1.25 (AWG 16)</td></tr>
<tr><td>HG-JR73</td></tr>
<tr><td>HG-JR103</td></tr>
<tr><td>HG-JR153</td><td rowspan="2">2 (AWG 14)</td><td rowspan="2">2 (AWG 14)</td></tr>
<tr><td>HG-JR203</td></tr>
<tr><td>HG-JR353</td><td>3.5 (AWG 12)</td><td>3.5 (AWG 12) (Note 1)</td></tr>
<tr><td>HG-JR503</td><td>5.5 (AWG 10) (Note 1)</td><td>5.5 (AWG 10) (Note 1)</td></tr>
<tr><td>HG-JR703</td><td>8 (AWG 8) (Note 1)</td><td rowspan="2"></td></tr>
<tr><td>HG-JR903</td><td>14 (AWG 6) (Note 1)</td></tr>
<tr><td>HG-JR534</td><td rowspan="3">1.25 (AWG 16)</td><td rowspan="3">1.25 (AWG 16)</td></tr>
<tr><td>HG-JR734</td></tr>
<tr><td>HG-JR1034</td></tr>
<tr><td>HG-JR1534</td><td rowspan="3">2 (AWG 14)</td><td rowspan="2">2 (AWG 14)</td></tr>
<tr><td>HG-JR2034</td></tr>
<tr><td>HG-JR3534</td><td>2 (AWG 14) (Note 1)</td></tr>
<tr><td>HG-JR5034</td><td>3.5 (AWG 12) (Note 1)</td><td>3.5 (AWG 12) (Note 1)</td></tr>
<tr><td>HG-JR7034</td><td>5.5 (AWG 10) (Note 1)</td><td rowspan="2"></td></tr>
<tr><td>HG-JR9034</td><td>8 (AWG 8) (Note 1)</td></tr>
</table>

Note 1. Refer to each servo amplifier instruction manual for crimp terminals and crimping tools used for connection with the servo amplifier.

2. The maximum torque can be increased to 400% by changing the servo amplifier. Refer to section 8.2 for the combinations.

(b) 1500 r/min series

<table>
<tr><th rowspan="2">Servo motor</th><th colspan="3">Wire [mm^2]</th></tr>
<tr><th>1) U/V/W/⏚</th><th>2) B1/B2</th><th>3) BU/BV/BW</th></tr>
<tr><td>HG-JR701M</td><td>8 (AWG 8) (Note)</td><td rowspan="3">1.25 (AWG 16)</td><td rowspan="3"></td></tr>
<tr><td>HG-JR11K1M</td><td>14 (AWG 6) (Note)</td></tr>
<tr><td>HG-JR15K1M</td><td>22 (AWG 4) (Note)</td></tr>
<tr><td>HG-JR22K1M</td><td>38 (AWG 2) (Note)</td><td rowspan="3"></td><td rowspan="3">1.25 (AWG 16)</td></tr>
<tr><td>HG-JR30K1M</td><td rowspan="2">60 (AWG 2/0) (Note)</td></tr>
<tr><td>HG-JR37K1M</td></tr>
<tr><td>HG-JR701M4</td><td>3.5 (AWG 12) (Note)</td><td rowspan="3">1.25 (AWG 16)</td><td rowspan="3"></td></tr>
<tr><td>HG-JR11K1M4</td><td rowspan="2">8 (AWG 8) (Note)</td></tr>
<tr><td>HG-JR15K1M4</td></tr>
<tr><td>HG-JR22K1M4</td><td>14 (AWG 6) (Note)</td><td rowspan="5"></td><td rowspan="5">1.25 (AWG 16)</td></tr>
<tr><td>HG-JR30K1M4</td><td>22 (AWG 4) (Note)</td></tr>
<tr><td>HG-JR37K1M4</td><td rowspan="3">38 (AWG 2) (Note)</td></tr>
<tr><td>HG-JR45K1M4</td></tr>
<tr><td>HG-JR55K1M4</td></tr>
</table>

Note. Refer to each servo amplifier instruction manual for crimp terminals and crimping tools used for connection with the servo amplifier.

(c) 1000 r/min series

Servo motor	Wire [mm^2]		
	1) U/V/W/⏚	2) B1/B2	3) BU/BV/BW
HG-JR601	8 (AWG 8) (Note)	1.25 (AWG 16)	
HG-JR801	14 (AWG 6) (Note)		
HG-JR12K1			
HG-JR15K1	22 (AWG 4) (Note)		1.25 (AWG 16)
HG-JR20K1	38 (AWG 2) (Note)		
HG-JR25K1			
HG-JR30K1	60 (AWG 2/0) (Note)		
HG-JR37K1			
HG-JR6014	3.5 (AWG 12) (Note)	1.25 (AWG 16)	
HG-JR8014	5.5 (AWG 10) (Note)		
HG-JR12K14	8 (AWG 8) (Note)		
HG-JR15K14			1.25 (AWG 16)
HG-JR20K14	14 (AWG 6) (Note)		
HG-JR25K14			
HG-JR30K14			
HG-JR37K14	22 (AWG 4) (Note)		

Note. Refer to each servo amplifier instruction manual for crimp terminals and crimping tools used for connection with the servo amplifier.

(4) HG-RR series

Servo motor	Wire [mm^2]	
	1) U/V/W/⏚	2) B1/B2
HG-RR103	2 (AWG 14)	1.25 (AWG 16)
HG-RR153		
HG-RR203	3.5 (AWG 12)	
HG-RR353	5.5 (AWG 10) (Note)	
HG-RR503		

Note. Refer to each servo amplifier instruction manual for crimp terminals and crimping tools used for connection with the servo amplifier.

(5) HG-UR series

Servo motor	Wire [mm^2]	
	1) U/V/W/⏚	2) B1/B2
HG-UR72	1.25 (AWG 16)	1.25 (AWG 16)
HG-UR152	2 (AWG 14)	
HG-UR202	3.5 (AWG 12)	
HG-UR352	5.5 (AWG 10) (Note)	
HG-UR502		

Note. Refer to each servo amplifier instruction manual for crimp terminals and crimping tools used for connection with the servo amplifier.

(6) HG-AK series

Servo motor	Wire [mm^2]	
	U/V/W/⏚	2) B1/B2
HG-AK0136	0.75 (AWG 19) (Note 1, 2)	0.75 (AWG 19) (Note 3, 4)
HG-AK0236		
HG-AK0336		

Note 1. For the servo motor power connector wiring, use fluorine resin wire of 0.75 mm^2 (AWG 19).
2. It is for wire length of 5 m or less. For over 5 m, the short-duration running range in the torque characteristics may be lower because of voltage drop.
3. For the electromagnetic connector wiring, use fluorine resin wire of 0.75 mm^2 (AWG 19).
4. It is for wire length of 5 m or less. For over 5 m, use HIV wires of 3.5 mm^2 (AWG12) to extend the wiring.

4.4 Servo amplifier terminal section

POINT
●For the sizes of wires used for wiring, refer to section 4.3. ●The drive unit do not have these connectors.

To wire to the servo amplifier, use connectors packed with the amplifier or optional connectors.
The following table shows the connectors to be connected to the servo amplifiers. The numbers in the rated output field of the table indicate the symbol filling the underline "_" in the servo amplifier model. For details of the connectors, refer to (1) of this section. For wiring, refer to (2) of this section.

Servo amplifier	Rated output												
	10	20	40	60	70	100	200	350	500	700	11K	15K	22K
MR-J4-_A MR-J4-_A-RJ MR-J4-_B MR-J4-_B-RJ MR-J4-_B-RJ010 MR-J4-_B-RJ020 MR-J4-_GF MR-J4-_GF-RJ	Connector A						Connector B		None (terminal block) (Note)				

Note. For details on the terminal block, refer to each servo amplifier instruction manual.

Servo amplifier	Rated output								
	60	100	200	350	500	700	11K	15K	22K
MR-J4-_A4 MR-J4-_A4-RJ MR-J4-_B4 MR-J4-_B4-RJ MR-J4-_B4-RJ010 MR-J4-_B4-RJ020 MR-J4-_GF4 MR-J4-_GF4-RJ	Connector D				None (terminal block) (Note)				

Note. For details on the terminal block, refer to each servo amplifier instruction manual.

Servo amplifier	Rated output		
	10	20	40
MR-J4-_A1 MR-J4-_A1-RJ MR-J4-_B1 MR-J4-_B1-RJ MR-J4-_B1-RJ020	Connector A		

Servo amplifier	Rated output (Note)			
	22 (222)	44 (444)	77	1010
MR-J4W2-_B	Connector C			
MR-J4W3-_B	Connector C			

Note. The numbers in parentheses are for the MR-J4 3-axis servo amplifier.

Servo amplifier	Connector
MR-J4-03A6(-RJ)	Connector E
MR-J4W2-0303B6	Connector F

(1) Connector details

(a) Connector A

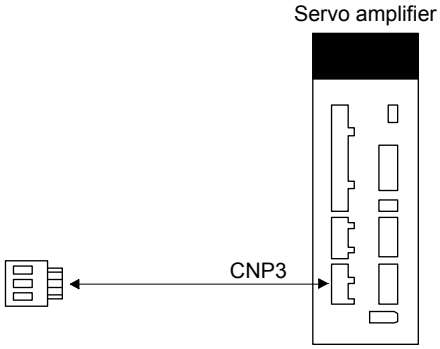

Table 4.1 Connector and applicable wire

Connector	Receptacle assembly	Applicable wire		Stripped length [mm]	Open tool	Manufacturer
		Wire size	Insulator OD			
CNP3	03JFAT-SAXGDK-H7.5	AWG 18 to 14	3.9 mm or less	9	J-FAT-OT (N) or J-FAT-OT	JST

(b) Connector B

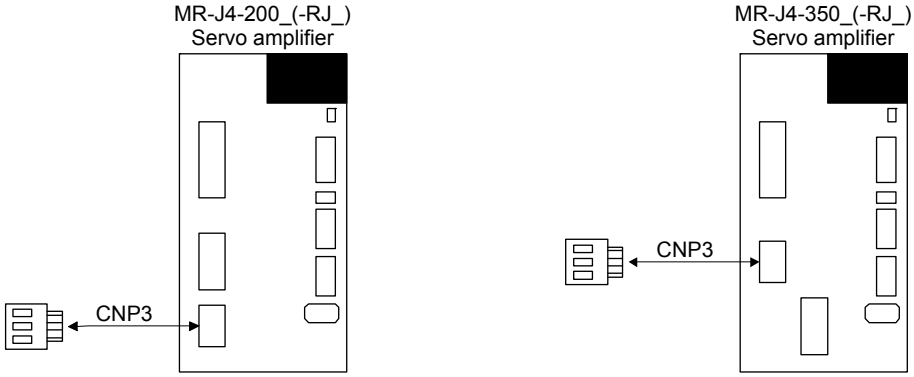

Table 4.2 Connector and applicable wire

Connector	Receptacle assembly	Applicable wire		Stripped length [mm]	Open tool	Manufacturer
		Wire size	Insulator OD			
CNP3	03JFAT-SAXGFK-XL	AWG 16 to 10	4.7 mm or less	11.5	J-FAT-OT-EXL	JST

(c) Connector C

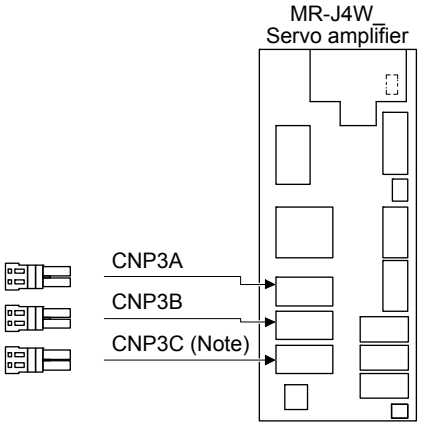

Note. This figure shows the MR-J4 3-axis servo amplifier.

Table 4.3 Connector and applicable wire

Connector	Receptacle assembly	Applicable wire size	Stripped length [mm]	Open tool	Manufacturer
CNP3A CNP3B CNP3C	04JFAT-SAGG-G-KK	AWG 18 to 14	9	J-FAT-OT-EXL	JST

(d) Connector D

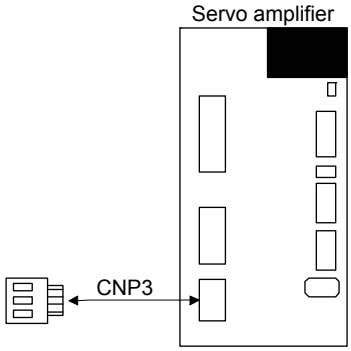

Table 4.4 Connector and applicable wire

Connector	Receptacle assembly	Applicable wire size		Stripped length [mm]	Open tool	Manufacturer
		Wire size	Insulator OD			
CNP3	03JFAT-SAXGDK-HT10.5	AWG 16 to 14	3.9 mm or less	10	J-FAT-OT-XL	JST

(e) Connector E

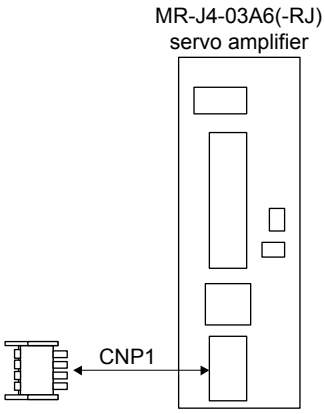

Table 4.5 Connector and applicable wire

Connector	Receptacle assembly	Applicable wire size	Stripped length [mm]	Manufacturer
CNP1	DFMC 1,5/ 4-ST-3,5-LR or equivalent	AWG 24 to 16	10	Phoenix Contact

(f) Connector F

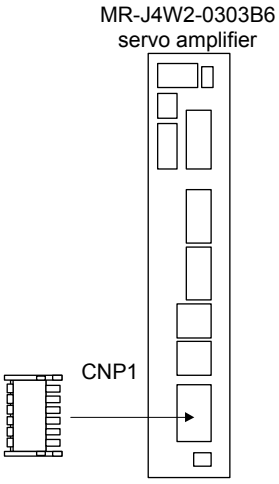

Table 4.6 Connector and applicable wire

Connector	Receptacle assembly	Applicable wire size	Stripped length [mm]	Manufacturer
CNP1	DFMC 1,5/ 6-ST-3,5-LR or equivalent	AWG 24 to 16	10	Phoenix Contact

(2) Cable connection procedure

(a) Cable making

Refer to table 4.1 to 4.4 for stripped length of cable insulator. The appropriate stripped length of cables depends on their type, etc. Set the length considering their status.

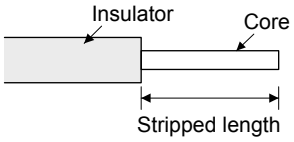

Twist strands slightly and straighten them as follows.

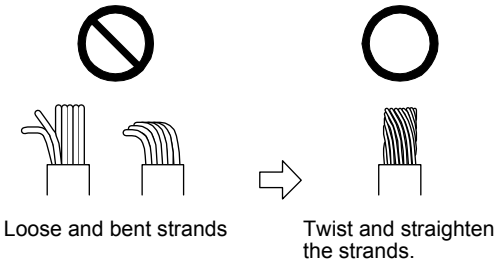

(b) Inserting wire

1) For connectors requiring an open tool (connector A to connector D)

Insert the open tool as follows and push down it to open the spring. While the open tool is pushed down, insert the stripped wire into the wire insertion hole. Check the insertion depth so that the cable insulator does not get caught by the spring.

Release the open tool to fix the wire. Pull the wire lightly to confirm that the wire is surely connected.

The following shows a connection example of the 03JFAT-SAXGFK-XL.

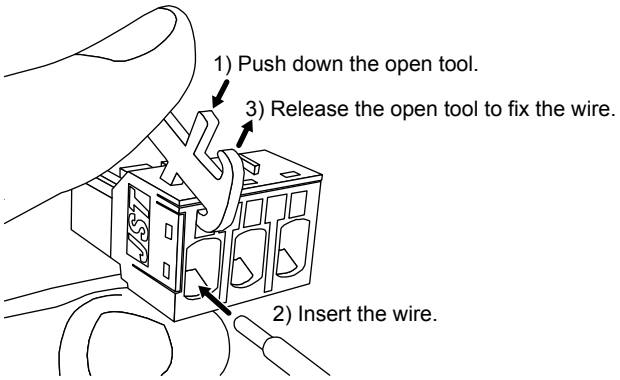

2) For connectors not requiring an open tool (connector E and connector F)
When using solid wire, insert the wire to the end. When using stranded wire, insert the wire to the end while pushing the release button with a small flat head screwdriver, etc.
The following shows a connection example of connecting stranded wire to the CNP1 connector.

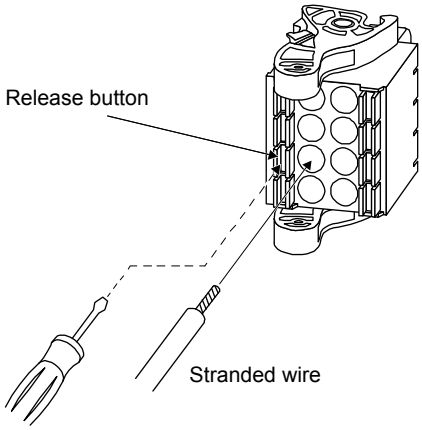

MEMO

5. WIRING OPTION

⚠WARNING	●Before connecting any option, turn off the power and wait for 15 minutes or more (20 minutes or more for converter unit and drive unit) until the charge lamp turns off. Then, confirm that the voltage between P+ and N- (L+ and L- for converter unit and drive unit) is safe with a voltage tester and others. Otherwise, an electric shock may occur. In addition, when confirming whether the charge lamp is off or not, always confirm it from the front of the servo amplifier (converter unit).

⚠CAUTION	●Use specified options. Otherwise, it may cause a malfunction or fire. ●MR-J3SCNS(A) and MR-ENCNS2(A) connector sets are packed with a plug and contacts. Using contacts for other plugs may damage the connector. Be sure to use the enclosed contacts.

POINT

●We recommend using HIV wires to wire the servo motors, options, and peripheral equipment. Therefore, recommended wire sizes may different from those of the used wires for the previous servo motors.

●When you use a drive unit, "servo amplifier" explained above will be "drive unit".

5.1 Cable/connector sets

POINT

●The IP rating indicated is the cable's or connector's protection against ingress of dust and water when the cable or connector is connected to a servo motor. If the IP rating of the cable, connector and servo motor vary, the overall IP rating depends on the lowest IP rating of all components.

Please purchase the cable and connector options indicated in this section for the servo motor. When fabricating an encoder cable, refer to app. 10.

5.1.1 Combinations of cable/connector sets

(1) HG-MR series/HG-KR series servo motor

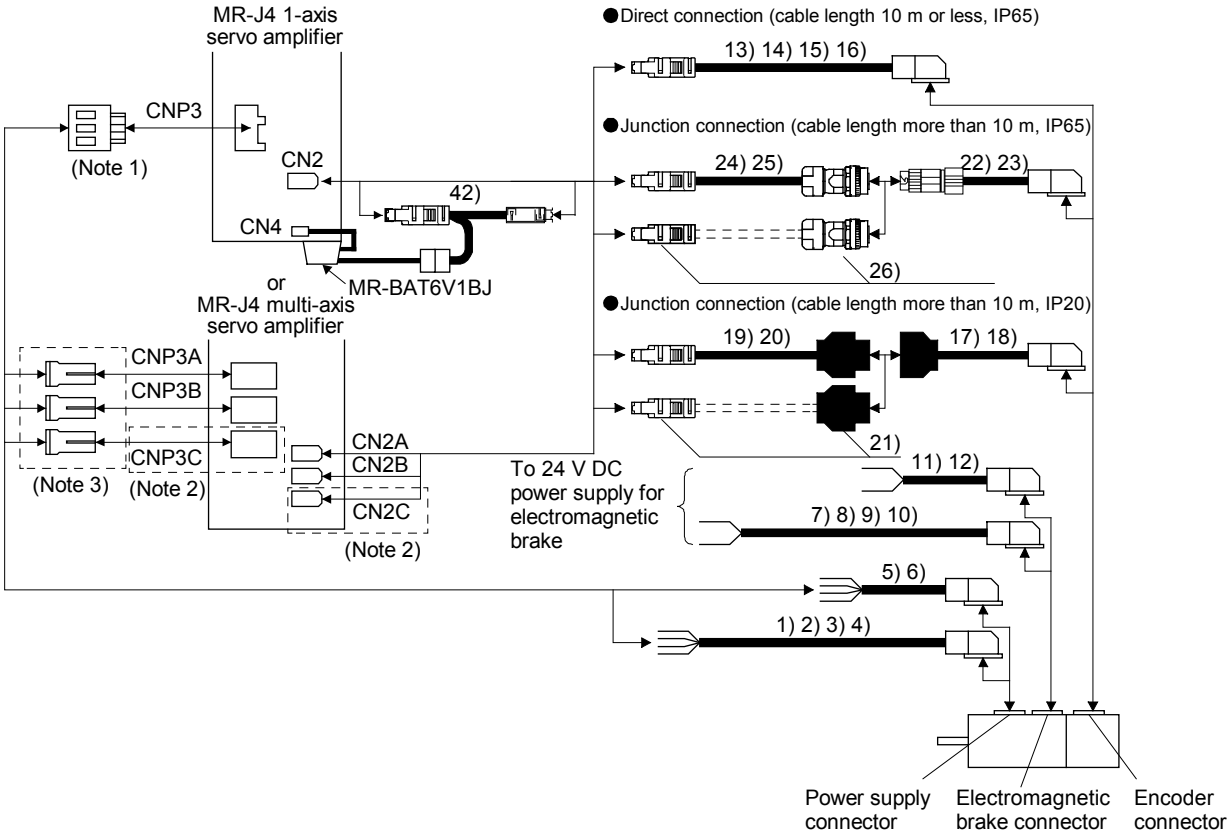

Note 1. Connectors for 3.5 kW or less. For 5 kW or more, it is a terminal block.
2. This connection is for the MR-J4 3-axis servo amplifier.
3. Refer to app. 7 for the crimp connector for CNP3_.

(2) HG-SR series/HG-JR53(4) to HG-JR903(4)/HG-JR701M(4) to HG-JR15K1M(4)/HG-JR601(4) to HG-JR12K1(4)/HG-RR series/HG-UR series servo motor

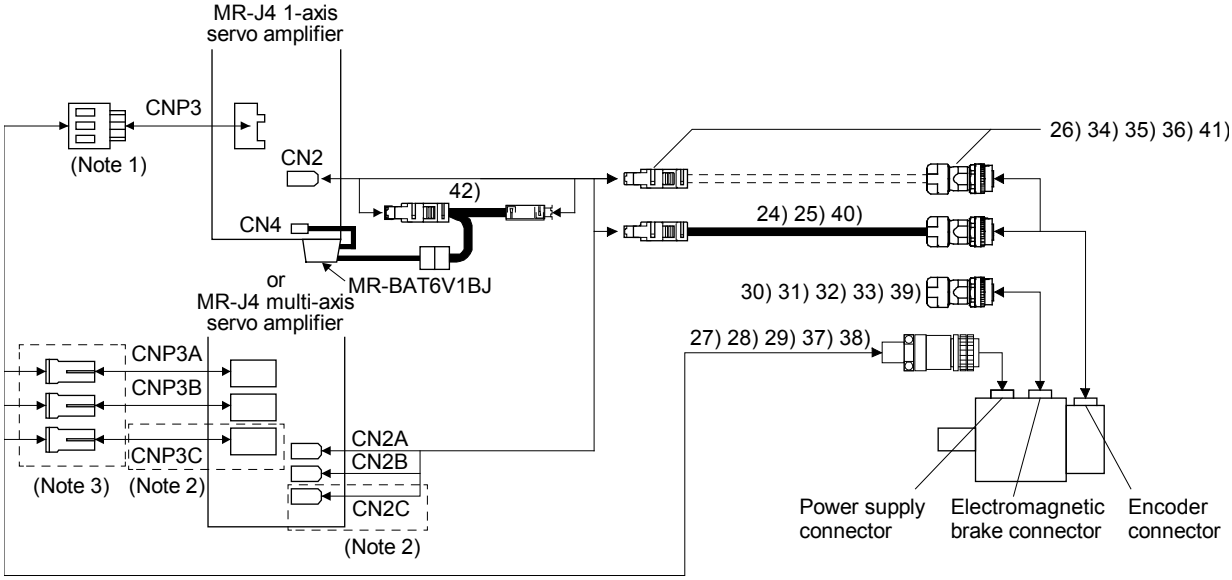

Note 1. Connectors for 3.5 kW or less. For 5 kW or more, it is a terminal block.
2. This connection is for the MR-J4 3-axis servo amplifier.
3. Refer to app. 7 for the crimp connector for CNP3_.

(3) HG-JR22K1M(4) to HG-JR37K1M(4)/HG-JR45K1M4/HG-JR55K1M4/HG-JR15K1(4) to HG-JR37K1(4) servo motor

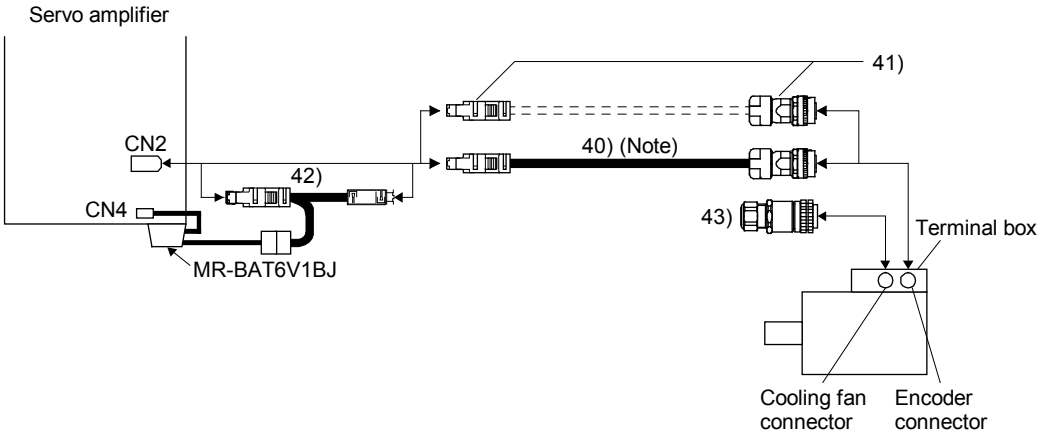

Note. MR-ENECBL_M-H cannot be used.

(4) HG-AK series servo motor

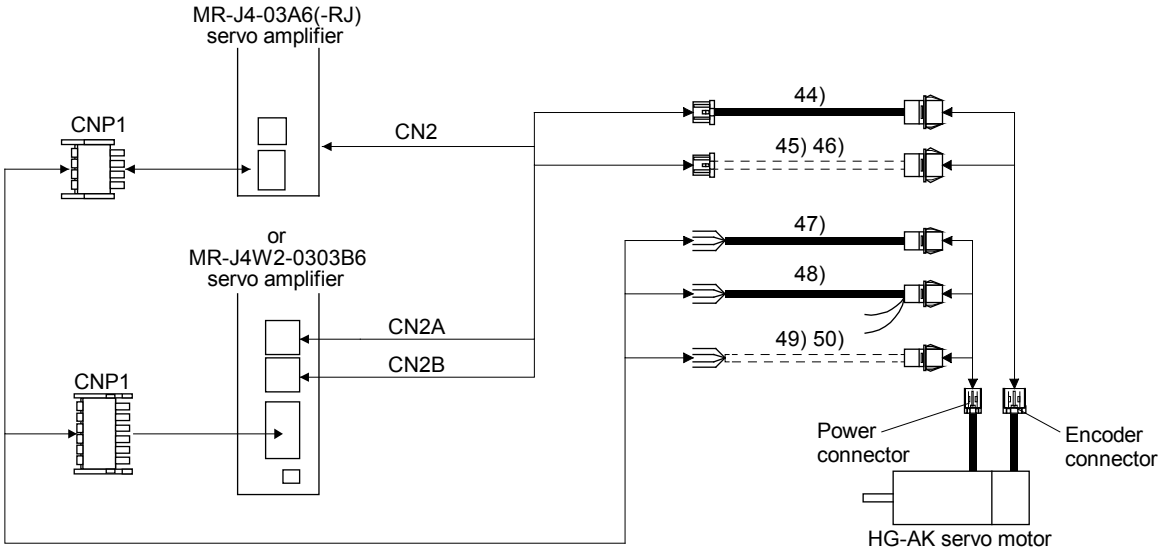

5.1.2 Cable and connector list

No.	Name	Model	Description	Remark
1)	Servo motor power cable	MR-PWS1CBL_M-A1-L (Note 1, 2) Cable length: 2/5/10 m	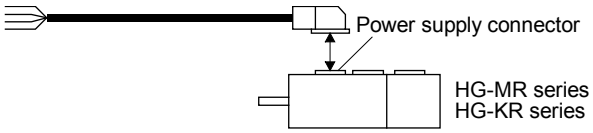	IP65 Load-side lead
2)	Servo motor power cable	MR-PWS1CBL_M-A1-H (Note 1) Cable length: 2/5/10 m	Refer to section 5.3 for details.	IP65 Load-side lead Long bending life
3)	Servo motor power cable	MR-PWS1CBL_M-A2-L (Note 1, 2) Cable length: 2/5/10 m	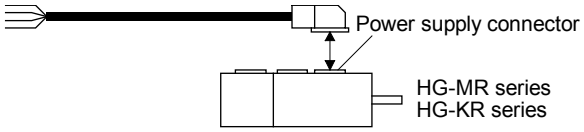	IP65 Opposite to load-side lead
4)	Servo motor power cable	MR-PWS1CBL_M-A2-H (Note 1) Cable length: 2/5/10 m	Refer to section 5.3 for details.	IP65 Opposite to load-side lead Long bending life
5)	Servo motor power cable	MR-PWS2CBL03M-A1-L (Note 1) Cable length: 0.3 m	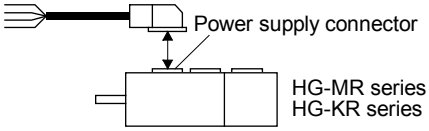 Refer to section 5.3 for details.	IP55 Load-side lead
6)	Servo motor power cable	MR-PWS2CBL03M-A2-L (Note 1) Cable length: 0.3 m	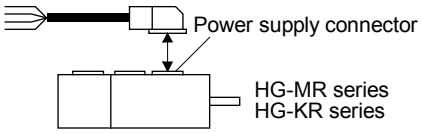 Refer to section 5.3 for details.	IP55 Opposite to load-side lead
7)	Electromagnetic brake cable	MR-BKS1CBL_M-A1-L Cable length: 2/5/10 m	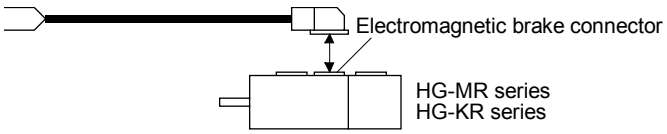	IP65 Load-side lead
8)	Electromagnetic brake cable	MR-BKS1CBL_M-A1-H Cable length: 2/5/10 m	Refer to section 5.5 for details.	IP65 Load-side lead Long bending life
9)	Electromagnetic brake cable	MR-BKS1CBL_M-A2-L Cable length: 2/5/10 m	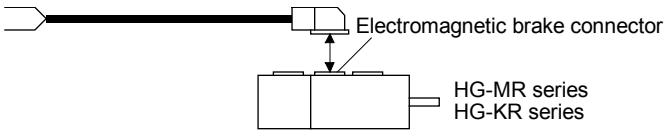	IP65 Opposite to load-side lead
10)	Electromagnetic brake cable	MR-BKS1CBL_M-A2-H Cable length: 2/5/10 m	Refer to section 5.5 for details.	IP65 Opposite to load-side lead Long bending life
11)	Electromagnetic brake cable	MR-BKS2CBL03M-A1-L Cable length: 0.3 m	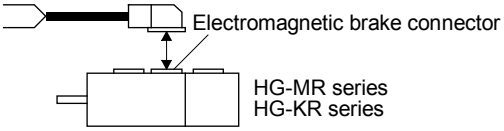 Refer to section 5.5 for details.	IP55 Load-side lead

No.	Name	Model	Description	Remark
12)	Electromagnetic brake cable	MR-BKS2CBL03M-A2-L Cable length: 0.3 m	Electromagnetic brake connector HG-MR series HG-KR series Refer to section 5.5 for details.	IP55 Opposite to load-side lead
13)	Encoder cable	MR-J3ENCBL_M-A1-L (Note 1) Cable length: 2/5/10 m	Encoder connector HG-MR series HG-KR series Refer to section 5.2 (1) for details.	IP65 Load-side lead
14)	Encoder cable	MR-J3ENCBL_M-A1-H (Note 1) Cable length: 2/5/10 m		IP65 Load-side lead Long bending life
15)	Encoder cable	MR-J3ENCBL_M-A2-L (Note 1) Cable length: 2/5/10 m	Encoder connector HG-MR series HG-KR series Refer to section 5.2 (1) for details.	IP65 Opposite to load-side lead
16)	Encoder cable	MR-J3ENCBL_M-A2-H (Note 1) Cable length: 2/5/10 m		IP65 Opposite to load-side lead Long bending life
17)	Encoder cable	MR-J3JCBL03M-A1-L (Note 1) Cable length: 0.3 m	Encoder connector HG-MR series HG-KR series Refer to section 5.2 (3) for details.	IP20 Load-side lead
18)	Encoder cable	MR-J3JCBL03M-A2-L (Note 1) Cable length: 0.3 m	Encoder connector HG-MR series HG-KR series Refer to section 5.2 (3) for details.	IP20 Opposite to load-side lead
19)	Encoder cable	MR-EKCBL_M-L Cable length: 20/30 m	HG-MR/HG-KR series Refer to section 5.2 (2) for details.	IP20
20)	Encoder cable	MR-EKCBL_M-H Cable length: 20/30/40/50 m		IP20 Long bending life
21)	Encoder connector set	MR-ECNM	HG-MR/HG-KR series Refer to section 5.2 (2) for details.	IP20
22)	Encoder cable	MR-J3JSCBL03M-A1-L (Note 1) Cable length: 0.3 m	Encoder connector HG-MR series HG-KR series Refer to section 5.2 (4) for details.	IP65 Load-side lead

No.	Name	Model	Description	Remark
23)	Encoder cable	MR-J3JSCBL03M-A2-L (Note 1) Cable length: 0.3 m	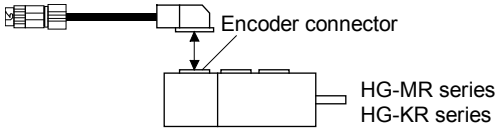 Refer to section 5.2 (4) for details.	IP65 Load-side lead
24)	Encoder cable	MR-J3ENSCBL_M-L (Note 1) Cable length: 2/5/10/20/30 m	 HG-KR/HG-MR/HG-SR/HG-RR/HG-UR series/ HG-JR53(4)/HG-JR73(4)/HG-JR103(4)/HG-JR153(4)/HG-JR203(4)/ HG-JR353(4)/HG-JR503(4)/HG-JR703(4)/HG-JR903(4) Refer to section 5.2 (5) for details.	IP67 Standard bending life
25)	Encoder cable	MR-J3ENSCBL_M-H (Note 1) Cable length: 2/5/10/20/30/40/50 m		IP67 Long bending life
26)	Encoder connector set	MR-J3SCNS (Note 1)	 HG-KR/HG-MR/HG-SR/HG-RR/HG-UR series/ HG-JR53(4)/HG-JR73(4)/HG-JR103(4)/HG-JR153(4)/HG-JR203(4)/ HG-JR353(4)/HG-JR503(4)/HG-JR703(4)/HG-JR903(4) Refer to section 5.2 (5) for details.	IP67
27)	Power connector set	MR-PWCNS4	Plug: CE05-6A18-10SD-D-BSS Cable clamp: CE3057-10A-1-D (DDK) Applicable cable Applicable wire size: 2 mm^2 (AWG 14) to 3.5 mm^2 (AWG 12) Cable OD: 10.5 mm to 14.1 mm 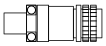 HG-SR51 HG-SR81 HG-SR52(4) HG-SR102(4) HG-SR152(4) HG-JR53(4) HG-JR73(4) HG-JR103(4) HG-JR153(4) HG-JR203(4) HG-JR3534 HG-JR5034	IP67 EN compliant
28)	Power connector set	MR-PWCNS5	Plug: CE05-6A22-22SD-D-BSS Cable clamp: CE3057-12A-1-D (DDK) Applicable cable Applicable wire size: 5.5 mm^2 (AWG 10) to 8 mm^2 (AWG 8) Cable OD: 12.5 mm to 16 mm 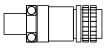 HG-SR121 HG-SR201 HG-SR301 HG-SR202(4) HG-SR352(4) HG-SR502(4) HG-JR353 HG-JR503	IP67 EN compliant
29)	Power connector set	MR-PWCNS3	Plug: CE05-6A32-17SD-D-BSS Cable clamp: CE3057-20A-1-D (DDK) Applicable cable Applicable wire size: 14 mm^2 (AWG 6) to 22 mm^2 (AWG 4) Cable OD: 22 mm to 23.8 mm 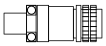 HG-SR421 HG-SR702(4) HG-JR703(4) HG-JR903(4) HG-JR701M(4) HG-JR11K1M(4) HG-JR15K1M(4) HG-JR601(4) HG-JR801(4) HG-JR12K1(4)	IP67 EN compliant

No.	Name	Model	Description	Remark
30)	Electromagnetic brake connector set	MR-BKCNS1 (Note 1)	Straight plug: CMV1-SP2S-L Socket contact: CMV1-#22BSC-S2-100 (DDK) HG-SR series HG-JR53(4) HG-JR73(4) HG-JR103(4) HG-JR153(4) HG-JR203(4) HG-JR353(4) HG-JR503(4) HG-JR703(4) HG-JR903(4)	IP67
31)	Electromagnetic brake connector set	MR-BKCNS1A (Note 1)	Angle plug: CMV1-AP2S-L Socket contact: CMV1-#22BSC-S2-100 (DDK) HG-SR series HG-JR53(4) HG-JR73(4) HG-JR103(4) HG-JR153(4) HG-JR203(4) HG-JR353(4) HG-JR503(4) HG-JR703(4) HG-JR903(4)	IP67
32)	Electromagnetic brake connector set	MR-BKCNS2	Straight plug: CMV1S-SP2S-L Socket contact: CMV1-#22BSC-S2-100 (DDK) HG-SR series HG-JR53(4) HG-JR73(4) HG-JR103(4) HG-JR153(4) HG-JR203(4) HG-JR353(4) HG-JR503(4) HG-JR703(4) HG-JR903(4)	IP67
33)	Electromagnetic brake connector set	MR-BKCNS2A	Angle plug: CMV1S-AP2S-L Socket contact: CMV1-#22BSC-S2-100 (DDK) HG-SR series HG-JR53(4) HG-JR73(4) HG-JR103(4) HG-JR153(4) HG-JR203(4) HG-JR353(4) HG-JR503(4) HG-JR703(4) HG-JR903(4)	IP67
34)	Encoder Connector set	MR-ENCNS2	HG-KR/HG-MR/HG-SR/HG-RR/HG-UR series/ HG-JR53(4)/HG-JR73(4)/HG-JR103(4)/HG-JR153(4)/HG-JR203(4)/ HG-JR353(4)/HG-JR503(4)/HG-JR703(4)/HG-JR903(4) Refer to section 5.2 (5) for details.	IP67

No.	Name	Model	Description	Remark
35)	Encoder Connector set	MR-J3SCNSA (Note 1)	 HG-KR/HG-MR/HG-SR/HG-RR/HG-UR series/ HG-JR53(4)/HG-JR73(4)/HG-JR103(4)/HG-JR153(4)/HG-JR203(4)/ HG-JR353(4)/HG-JR503(4)/HG-JR703(4)/HG-JR903(4) Refer to section 5.2 (5) for details.	IP67
36)	Encoder Connector set	MR-ENCNS2A	 HG-KR/HG-MR/HG-SR/HG-RR/HG-UR series/ HG-JR53(4)/HG-JR73(4)/HG-JR103(4)/HG-JR153(4)/HG-JR203(4)/ HG-JR353(4)/HG-JR503(4)/HG-JR703(4)/HG-JR903(4) Refer to section 5.2 (5) for details.	IP67
37)	Power connector set	MR-PWCNS1	Plug: CE05-6A22-23SD-D-BSS Cable clamp: CE3057-12A-2-D (DDK) Applicable cable Applicable wire size: 2 mm^2 to 3.5 mm^2 (AWG 14 to 12) Cable OD: 9.5 mm to 13 mm 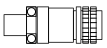 HG-RR103 HG-RR153 HG-RR203 HG-UR72 HG-UR152	IP65 EN compliant
38)	Power connector set	MR-PWCNS2	Plug: CE05-6A24-10SD-D-BSS Cable clamp: CE3057-16A-2-D (DDK) Applicable cable Applicable wire size: 5.5 mm^2 to 8 mm^2 (AWG 10 to 8) Cable OD: 13 mm to 15.5 mm 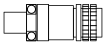 HG-RR353 HG-RR503 HG-UR202 HG-UR352 HG-UR502	
39)	Electromagnetic brake connector set	MR-BKCN	Plug: D/MS3106A10SL-4S(D190) (DDK) Cable clamp: YSO10-5-8 (Daiwa Dengyo) Applicable cable Applicable wire size: 0.3 mm^2 to 1.25 mm^2 (AWG 22 to 16) Cable OD: 5 mm to 8.3 mm HG-UR202 HG-UR352 HG-UR502 HG-JR701M(4) HG-JR11K1M(4) HG-JR15K1M(4) HG-JR601(4) HG-JR801(4) HG-JR12K1(4)	IP65 EN compliant
40)	Encoder cable	MR-ENECBL_ M-H-MTH	 HG-JR701M(4)/HG-JR11K1M(4)/HG-JR15K1M(4)/HG-JR22K1M(4)/ HG-JR30K1M(4)/HG-JR37K1M(4)/HG-JR45K1M4/HG-JR55K1M4/ HG-JR601(4)/HG-JR801(4)/HG-JR12K1(4)/HG-JR15K1(4)/HG-JR20K1(4)/ HG-JR25K1(4)/HG-JR30K1(4)/HG-JR37K1(4) Refer to section 5.2 (6) for details.	IP67 Long bending life
41)	Encoder connector set	MR-ENECNS	 HG-JR701M(4)/HG-JR11K1M(4)/HG-JR15K1M(4)/HG-JR22K1M(4)/ HG-JR30K1M(4)/HG-JR37K1M(4)/HG-JR45K1M4/HG-JR55K1M4/ HG-JR601(4)/HG-JR801(4)/HG-JR12K1(4)/HG-JR15K1(4)/HG-JR20K1(4)/ HG-JR25K1(4)/HG-JR30K1(4)/HG-JR37K1(4) Refer to section 5.2 (6) for details.	IP67
42)	Junction battery cable	MR-BT6VCBL03M	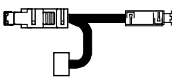 Refer to section 5.2 (7) for details.	Only for MR-BAT6V1BJ

No.	Name	Model	Description	Remark
43)	Cooling fan power connector set	MR-PWCNF	Plug: CE05-6A14S-2SD-D (DDK) Cable clamp: YSO14-9 to 11 (Daiwa Dengyo) Applicable cable Applicable wire size: 0.3 mm^2 to 1.25 mm^2 (AWG 22 to 16) Cable OD: 8.3 mm to 11.3 mm HG-JR22K1M(4) HG-JR30K1M(4) HG-JR37K1M(4) HG-JR45K1M4 HG-JR55K1M4 HG-JR15K1(4) HG-JR20K1(4) HG-JR25K1(4) HG-JR30K1(4) HG-JR37K1(4)	IP67 EN compliant
44)	Encoder cable	MR-J3W03ENCBL_M-A-H Cable length: 1/2/5/10/20/30 m	Refer to section 5.2 (8) for details.	Long bending life
45)	Encoder connector set	MR-J3W03CN2-2P	Refer to section 5.2 (8) for details.	Quantity: 2
46)		MR-J3W03CN2-20P		Quantity: 20
47)	Servo motor power cable	MR-J4W03PWCBL_M-H Cable length: 1/2/5/10/20/30 m	Refer to section 5.4 for details.	Long bending life
48)	Servo motor power cable	MR-J4W03PWBRCBL_M-H Cable length: 1/2/5/10/20/30 m	Refer to section 5.4 for details.	Long bending life Servo motor with an electro-magnetic brake
49)	Servo motor power connector set	MR-J4W03CNP2-2P	Refer to section 5.4 for details.	Quantity: 2
50)		MR-J4W03CNP2-20P		Quantity: 20

Note 1. The cable and the connector set may contain different connectors but still usable.
2. For servo motor power cable, MR-PWS3CBL_M-A_-L using shielded cable is also available. For details, contact your local sales office.

5.2 Encoder cable/connector sets

POINT

●For CN2, CN2A, CN2B, and CN2C side connectors, securely connect the shielded external conductor of the cable to the ground plate and fix it to the connector shell.

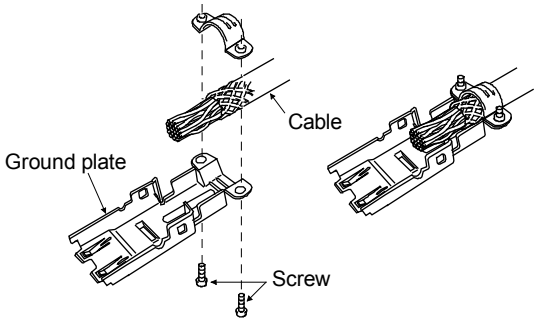

Encoder cables are not subject to European Low Voltage Directive (50 V AC to 1000 V AC and 75 V DC to 1500 V DC).

(1) MR-J3ENCBL_M-_-_

These cables are encoder cables for the HG-MR/HG-KR series servo motors. The numbers in the cable length field of the table indicate the symbol filling the underline "_" in the cable model.

Cable model	Cable length			IP rating	Bending life	Application
	2 m	5 m	10 m			
MR-J3ENCBL_M-A1-L	2	5	10	IP65	Standard	Load-side lead for HG-MR/HG-KR
MR-J3ENCBL_M-A1-H	2	5	10	IP65	Long bending life	
MR-J3ENCBL_M-A2-L	2	5	10	IP65	Standard	Opposite to load-side lead for HG-MR/HG-KR
MR-J3ENCBL_M-A2-H	2	5	10	IP65	Long bending life	

(a) Connection of servo amplifier and servo motor

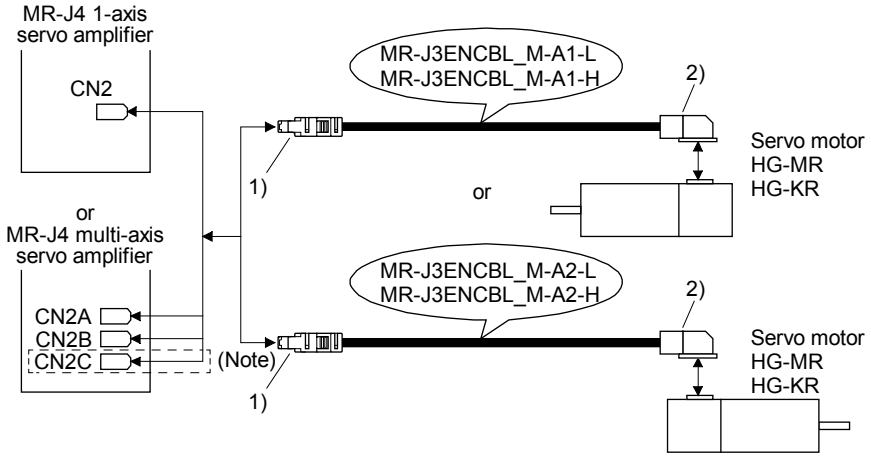

Note. This connection is for the MR-J4 3-axis servo amplifier.

Cable model	1) CN2, CN2A, CN2B, and CN2C side connector	2) Encoder-side connector
MR-J3ENCBL_M-A1-L MR-J3ENCBL_M-A1-H MR-J3ENCBL_M-A2-L MR-J3ENCBL_M-A2-H	Receptacle: 36210-0100PL Shell kit: 36310-3200-008 (3M or equivalent) Connector set: 54599-1019 (Molex) 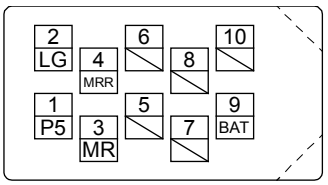 View seen from wiring side. (Note) or 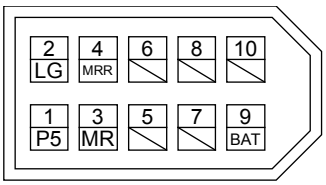 View seen from wiring side. (Note) Note. Keep open the pins shown with ▧. Especially, pin 10 is provided for manufacturer adjustment. If it is connected with any other pin, the servo amplifier cannot operate normally. Referring POINT of section 5.2, securely connect the external conductor of the shielded cable to the ground plate and fix it to the connector shell.	Connector: 2174053-1 Crimping tool for ground clip: 1596970-1 Crimping tool for receptacle contact: 1596847-1 (TE Connectivity) 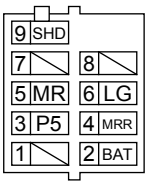 View seen from wiring side. (Note) Note. Keep open the pins shown with ▧.

(b) Cable internal wiring diagram

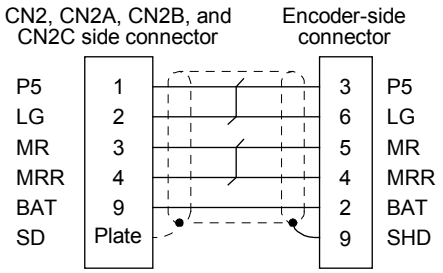

(2) MR-EKCBL_M-_

POINT
●The following encoder cables are of four-wire type. MR-EKCBL30M-L MR-EKCBL30M-H MR-EKCBL40M-H MR-EKCBL50M-H When using any of these encoder cables, select "four-wire type" referring each servo amplifier instruction manual. If the setting is incorrect, [AL. 16] occurs.

The servo amplifier and the servo motor cannot be connected by these cables alone. The servo motor-side encoder cable (MR-J3JCBL03M-_-L) is required.
The numbers in the cable length field of the table indicate the symbol filling the underline "_" in the cable model.

Cable model	Cable length				IP rating	Bending life	Application
	20 m	30 m	40 m	50 m			
MR-EKCBL_M-L	20	(Note) 30			IP20	Standard	For HG-MR/HG-KR Use in combination with MR-J3JCBL03M-_-L.
MR-EKCBL_M-H	20	(Note) 30	(Note) 40	(Note) 50	IP20	Long bending life	

Note. Four-wire type cable

(a) Connection of servo amplifier and servo motor

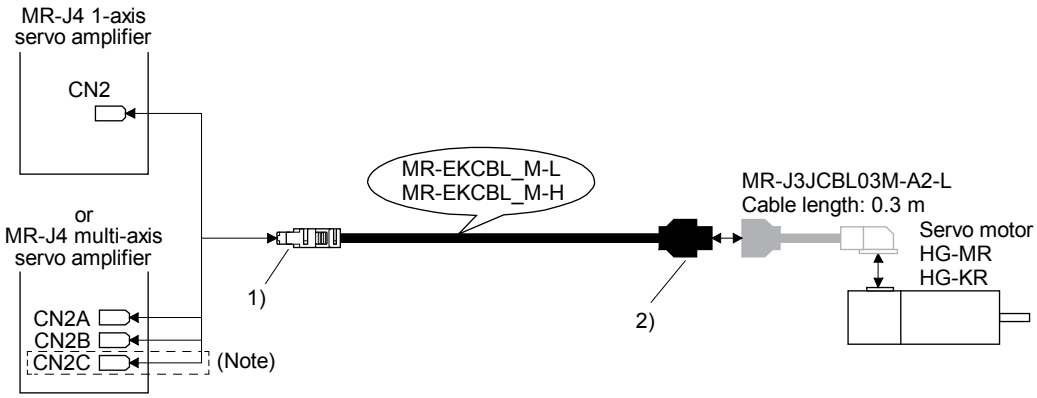

Note. This connection is for the MR-J4 3-axis servo amplifier.

Cable model	1) CN2, CN2A, CN2B, and CN2C side connector	2) Junction connector
MR-EKCBL_M-L MR-EKCBL_M-H	Receptacle: 36210-0100PL Shell kit: 36310-3200-008 (3M) Connector set: 54599-1019 (Molex) 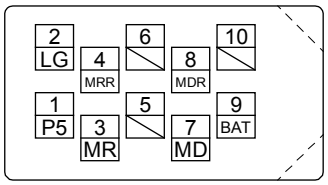 View seen from wiring side. (Note) or 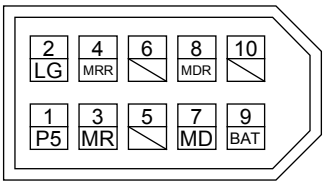 View seen from wiring side. (Note) Note. Keep open the pins shown with ▧. Especially, pin 10 is provided for manufacturer adjustment. If it is connected with any other pin, the servo amplifier cannot operate normally. Referring POINT of section 5.2, securely connect the external conductor of the shielded cable to the ground plate and fix it to the connector shell.	Housing: 1-172161-9 Connector pin: 170359-1 Crimping tool: 91529-1 (TE Connectivity or equivalent) Cable clamp: MTI-0002 (Toa Electric Industrial) 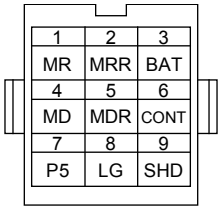 View seen from wiring side.

(b) Internal wiring diagram

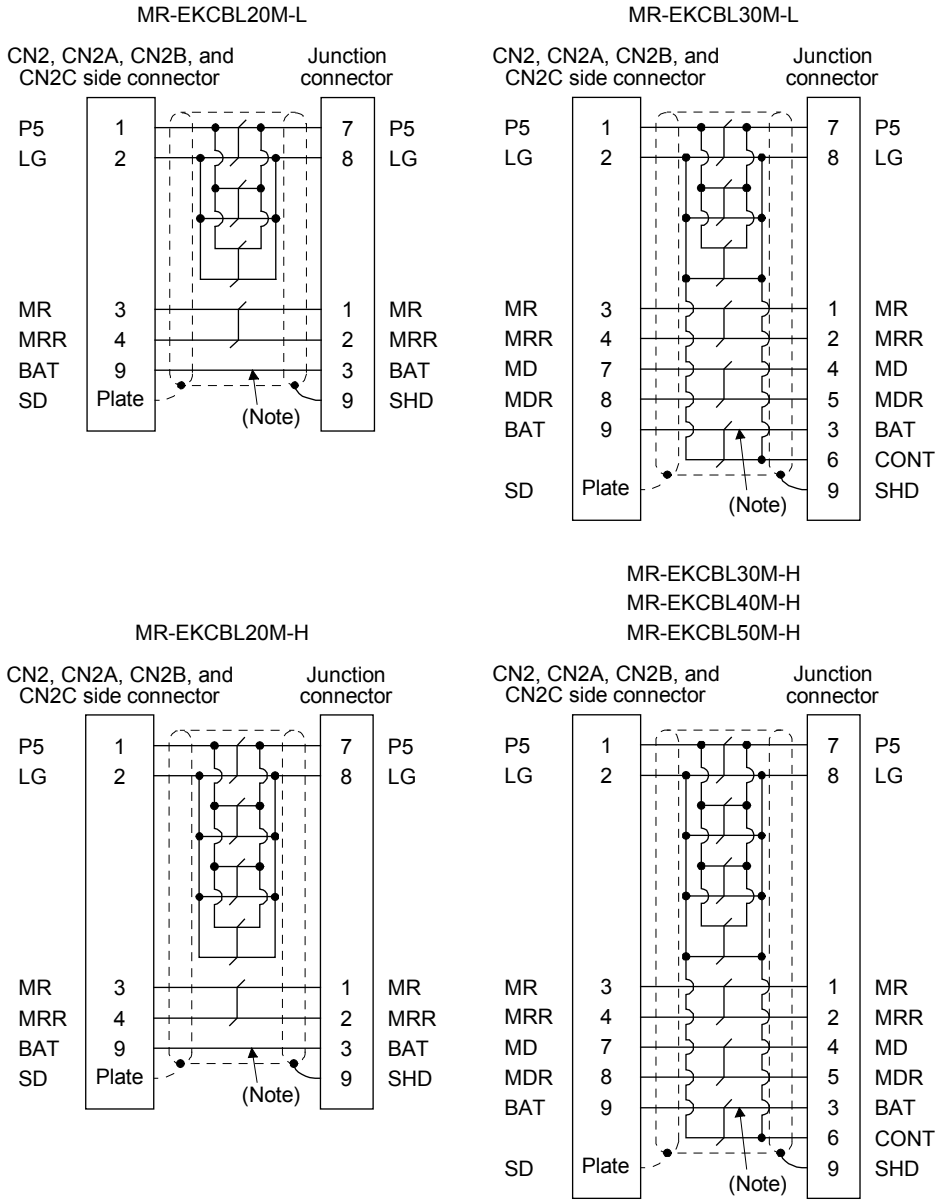

Note. Always make connection for use in an absolute position detection system. Wiring is not necessary for use in an incremental system.

When fabricating the cable, use the wiring diagram corresponding to the length indicated below.

Cable bending life	Applicable wiring diagram	
	Less than 30 m	30 m to 50 m
Standard	MR-EKCBL20M-L	MR-EKCBL30M-L
Long bending life	MR-EKCBL20M-H	MR-EKCBL30M-H MR-EKCBL40M-H MR-EKCBL50M-H

(c) When fabricating the encoder cable

Prepare the following parts, and fabricate it according to the wiring diagram in (b) of this section. Refer to section 5.6 for the specifications of the cable to use.

Parts	Description	
Connector set	MR-ECNM	
	 CN2, CN2A, CN2B, and CN2C side connector Receptacle: 36210-0100PL Shell kit: 36310-3200-008 (3M) or Connector set: 54599-1019 (Molex)	 Encoder-side connector Housing: 1-172161-9 Connector pin: 170359-1 (TE Connectivity or equivalent) Cable clamp: MTI-0002 (Toa Electric Industrial)

(3) MR-J3JCBL03M-_-L

The servo amplifier and the servo motor cannot be connected by these cables alone. The servo motor-side encoder cable (MR-EKCBL_M-_) is required.

Cable model	Cable length	IP rating	Bending life	Application
MR-J3JCBL03M-A1-L	0.3 m	IP20	Standard	Load-side lead for HG-MR/HG-KR Use in combination with MR-EKCBL_M-_.
MR-J3JCBL03M-A2-L				Opposite to load-side lead for HG-MR/HG-KR Use in combination with MR-EKCBL_M-_.

(a) Connection of servo amplifier and servo motor

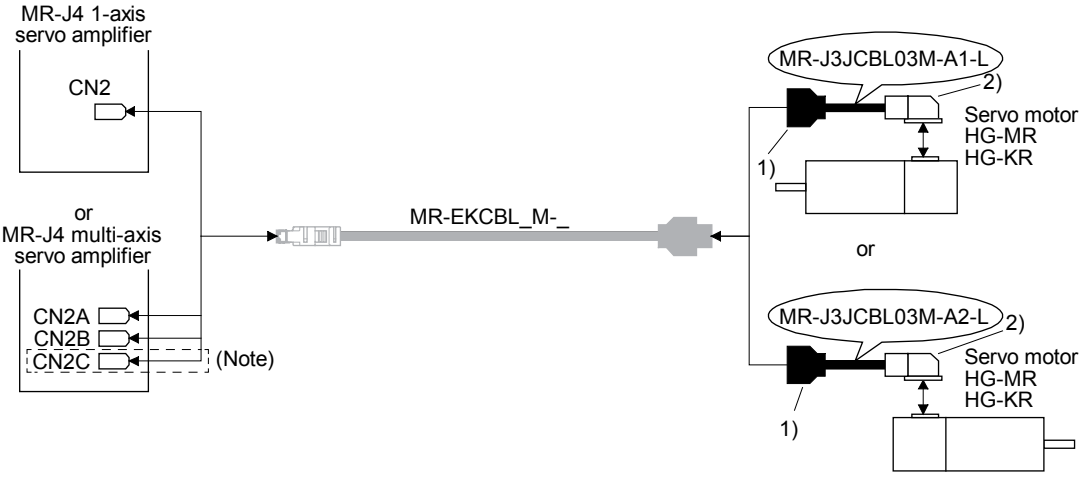

Note. This connection is for the MR-J4 3-axis servo amplifier.

Cable model	1) Junction connector	2) Encoder-side connector
MR-J3JCBL03M-A1-L	Housing: 1-172169-9 Contact: 1473226-1 Cable clamp: 316454-1 Crimping tool: 91529-1 (TE Connectivity) 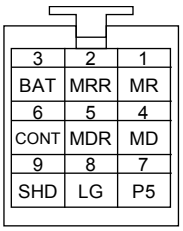 View seen from wiring side.	Connector: 2174053-1 Crimping tool for ground clip: 1596970-1 Crimping tool for receptacle contact: 1596847-1 (TE Connectivity) 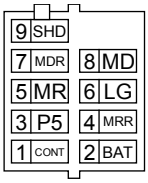 View seen from wiring side.
MR-J3JCBL03M-A2-L		

(b) Internal wiring diagram

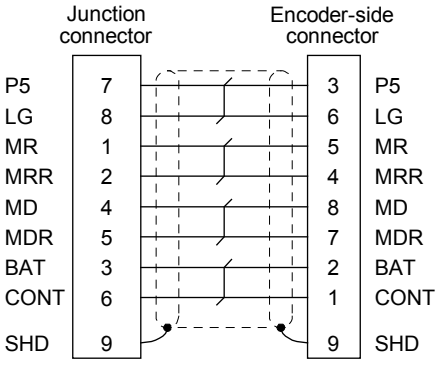

(4) MR-J3JSCBL03M-_-L

The servo amplifier and the servo motor cannot be connected by these cables alone. The servo motor-side encoder cable (MR-J3ENSCBL_M-_) is required.

Cable model	Cable length	IP rating	Bending life	Application
MR-J3JSCBL03M-A1-L	0.3 m	IP65	Standard	For HG-KR/HG-MR Load-side lead Use in combination with MR-J3ENSCBL_M-_.
MR-J3JSCBL03M-A2-L				For HG-KR/HG-MR Opposite to load-side lead Use in combination with MR-J3ENSCBL_M-_.

(a) Connection of servo amplifier and servo motor

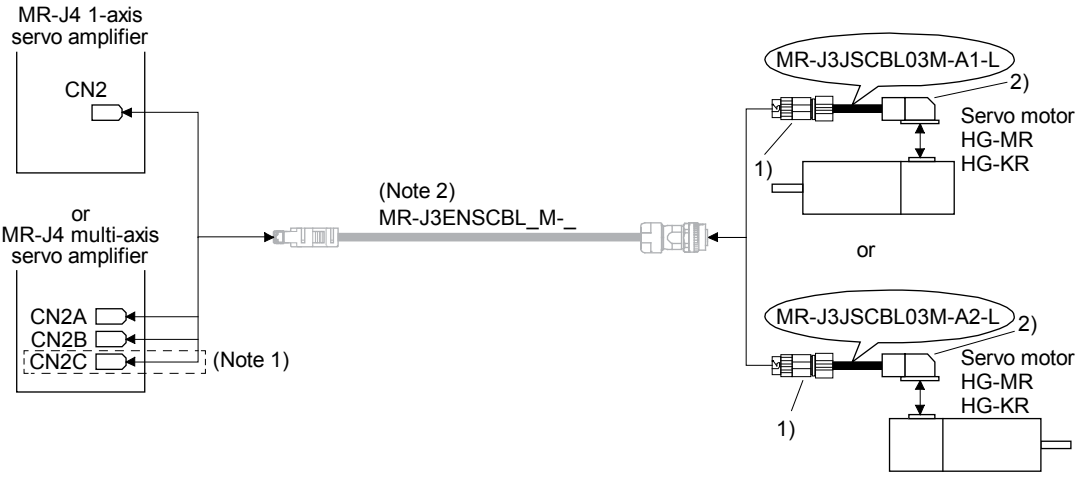

Note 1. This connection is for the MR-J4 3-axis servo amplifier.
2. For details of this cable, refer to (5) in this section.

Cable model	1) Junction connector	2) Encoder-side connector
MR-J3JSCBL03M-A1-L MR-J3JSCBL03M-A2-L	Receptacle: CM10-CR10P-M (DDK) Applicable wire size: AWG 20 or less 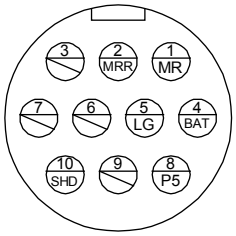 View seen from wiring side. (Note) Note. Keep open the pins shown with ◡.	Connector: 2174053-1 Crimping tool for ground clip: 1596970-1 Crimping tool for receptacle contact: 1596847-1 (TE Connectivity) 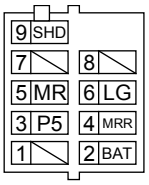 View seen from wiring side. (Note) Note. Keep open the pins shown with ▷.

(b) Internal wiring diagram

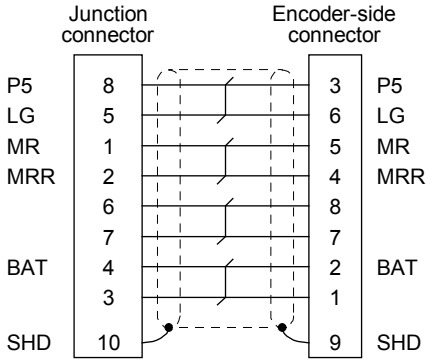

(5) MR-J3ENSCBL_M-_

These cables are encoder cables for the HG-MR/HG-KR/HG-SR/HG-RR/HG-UR series/HG-JR53(4)/HGJR73(4)/HG-JR103(4)/HG-JR153(4)/HG-JR203(4)/HG-JR353(4)/HG-JR503(4)/HG-JR703(4) and HG-JR903(4) servo motors. The numbers in the cable length field of the table indicate the symbol filling the underline "_" in the cable model.

Cable model	Cable length							IP rating	Bending life	Application
	2 m	5 m	10 m	20 m	30 m	40 m	50 m			
MR-J3ENSCBL_M-L	2	5	10	20	30			IP67	Standard	For HG-MR/HG-KR/HG-SR/ HG-RR/HG-UR series/ HG-JR53(4)/HGJR73(4)/ HG-JR103(4)/HG-JR153(4)/ HG-JR203(4)/HG-JR353(4)/ HG-JR503(4)/HG-JR703(4) and HG-JR903(4)
MR-J3ENSCBL_M-H	2	5	10	20	30	40	50	IP67	Long bending life	

(a) Connection of servo amplifier and servo motor

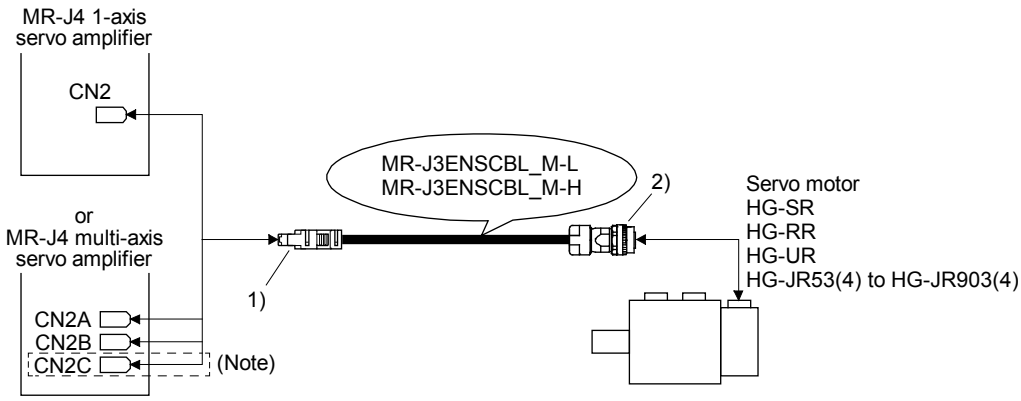

Note. This connection is for the MR-J4 3-axis servo amplifier.

<table>
<tr><th>Cable model</th><th>1) CN2, CN2A, CN2B, and CN2C side connector</th><th>2) Encoder-side connector</th></tr>
<tr><td>MR-J3ENSCBL_M-L</td><td>Receptacle: 36210-0100PL
Shell kit: 36310-3200-008
(3M)
 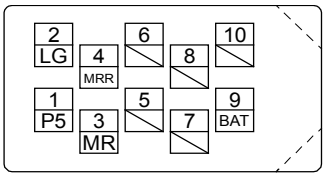

View seen from wiring side. (Note)

or

Connector set: 54599-1019
(Molex)
 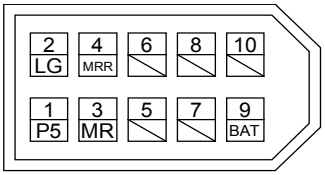

View seen from wiring side. (Note)

Note. Keep open the pins shown with ▧. Especially, pin 10 is provided for manufacturer adjustment. If it is connected with any other pin, the servo amplifier cannot operate normally. Referring POINT of section 5.2, securely connect the external conductor of the shielded cable to the ground plate and fix it to the connector shell.</td><td rowspan="2">
<table>
<tr><th rowspan="2">Cable length</th><th rowspan="2">Bending life</th><th colspan="2">Plug (DDK)</th></tr>
<tr><th>Straight plug</th><th>Socket contact</th></tr>
<tr><td rowspan="2">10 m or shorter</td><td>Long bending life</td><td rowspan="3">CMV1-SP10S-M1</td><td rowspan="2">CMV1-#22ASC-C1-100
Applicable wire size: AWG 24 to 20
Crimping tool:357J-53162T</td></tr>
<tr><td>Standard</td></tr>
<tr><td rowspan="2">20 m or longer</td><td>Long bending life</td><td rowspan="2">CMV1-#22ASC-C2-100
Applicable wire size: AWG 28 to 24
Crimping tool:357J-53163T</td></tr>
<tr><td>Standard</td><td>CMV1-SP10S-M2</td></tr>
</table>
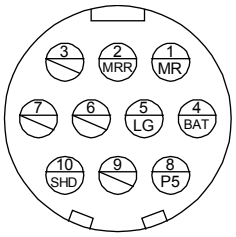

View seen from wiring side. (Note)

Note. Keep open the pins shown with ◡.
</td></tr>
<tr><td>MR-J3ENSCBL_M-H</td></tr>
</table>

(b) Cable internal wiring diagram

MR-J3ENSCBL2M-L
MR-J3ENSCBL5M-L
MR-J3ENSCBL10M-L
MR-J3ENSCBL2M-H
MR-J3ENSCBL5M-H
MR-J3ENSCBL10M-H

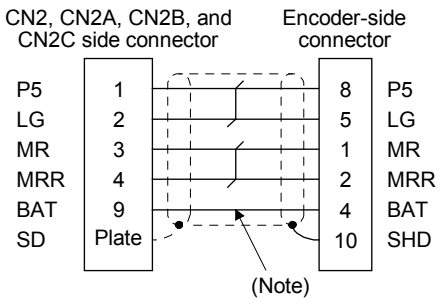

MR-J3ENSCBL20M-L
MR-J3ENSCBL30M-L

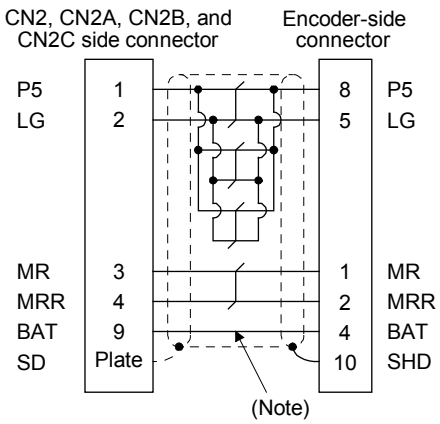

MR-J3ENSCBL20M-H
MR-J3ENSCBL30M-H
MR-J3ENSCBL40M-H
MR-J3ENSCBL50M-H

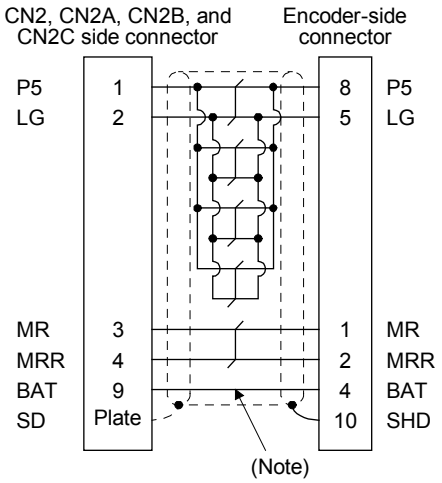

Note. Always make connection for use in an absolute position detection system. Wiring is not necessary for use in an incremental system.

(c) When fabricating the encoder cable

Prepare the following parts, and fabricate it according to the wiring diagram in (b) of this section. Refer to section 5.5 for the specifications of the used cable.

Parts (Connector set)	Description	
	Servo amplifier side connector	Encoder-side connector (DDK)
MR-J3SCNS (one-touch connection type) (Note)	 Receptacle: 36210-0100PL Shell kit: 36310-3200-008 (3M) or Connector set: 54599-1019 (Molex)	 Straight plug: CMV1-SP10S-M2 Socket contact: CMV1-#22ASC-S1-100 Applicable wire size: AWG 20 or less
MR-ENCNS2 (screw type) (Note)		 Straight plug: CMV1S-SP10S-M2 Socket contact: CMV1-#22ASC-S1-100 Applicable wire size: AWG 20 or less
MR-J3SCNSA (one-touch connection type) (Note)		 Angle plug: CMV1-AP10S-M2 Socket contact: CMV1-#22ASC-S1-100 Applicable wire size: AWG 20 or less
MR-ENCNS2A (screw type) (Note)		 Angle plug: CMV1S-AP10S-M2 Socket contact: CMV1-#22ASC-S1-100 Applicable wire size: AWG 20 or less

Note. Cable clamp and bushing for 5.5 mm to 7.5 mm and 7.0 mm to 9.0 mm of cable outer diameter are included.

(6) MR-ENECBL_M-H-MTH

These cables are encoder cables for HG-JR701M(4), HG-JR11K1M(4), HG-JR15K1M(4), HG-JR22K1M(4), HG-JR30K1M(4), HG-JR37K1M(4), HG-JR45K1M4, HG-JR55K1M4, HG-JR601(4), HG-JR801(4), HG-JR12K1(4), HG-JR15K1(4), HG-JR20K1(4), HG-JR25K1(4), HG-JR30K1(4), and HG-JR37K1(4) servo motors. The numbers in the cable length field of the table indicate the symbol filling the underline "_" in the cable model.

Cable model	Cable length							IP rating	Bending life	Application
	2 m	5 m	10 m	20 m	30 m	40 m	50 m			
MR-ENECBL_M-H-MTH	2	5	10	20	30	40	50	IP67	Long bending life	For HG-JR701M(4), HG-JR11K1M(4), HG-JR15K1M(4), HG-JR22K1M(4), HG-JR30K1M(4), HG-JR37K1M(4), HG-JR45K1M4, HG-JR55K1M4, HG-JR601(4), HG-JR801(4), HG-JR12K1(4), HG-JR15K1(4), HG-JR20K1(4), HG-JR25K1(4), HG-JR30K1(4), and HG-JR37K1(4)

(a) Connection of servo amplifier and servo motor

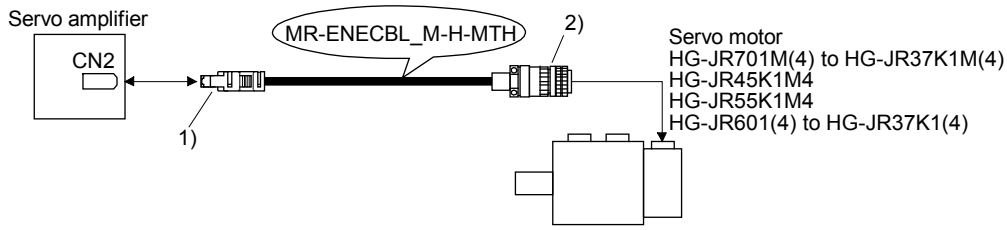

Cable model	1) CN2-side connector	2) Encoder-side connector
MR-ENECBL_M-H-MTH	Receptacle: 36210-0100PL Shell kit: 36310-3200-008 (3M) Connector set: 54599-1019 (Molex) 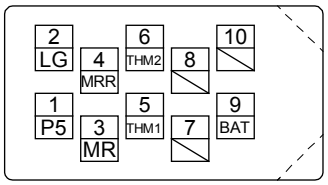 View seen from wiring side. (Note) or 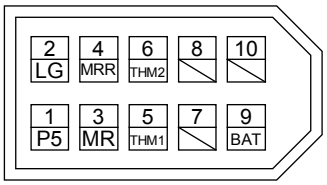 View seen from wiring side. (Note) Note. Do not connect anything to the pins shown as ▨. Especially, pin 10 is provided for manufacturer adjustment. If it is connected with any other pin, the servo amplifier cannot operate normally. Referring POINT of section 5.2, securely connect the external conductor of the shielded cable to the ground plate and fix it to the connector shell.	Plug: D/MS3106A20-29S(D190) Cable clamp: CE3057-12A-3-D Backshell: CE02-20BS-S-D 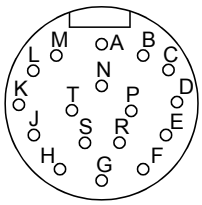 View seen from wiring side. (Note) Pin / Signal: A ▨, B ▨, C MR, D MRR, E ▨, F BAT, G LG, H ▨, J ▨ Pin / Signal: K THM1, L THM2, M ▨, N SHD, P ▨, R LG, S P5, T ▨ Note. Do not connect anything to the pins shown as ▨.

(b) Cable internal wiring diagram

MR-ENECBL2M-H-MTH
MR-ENECBL5M-H-MTH
MR-ENECBL10M-H-MTH

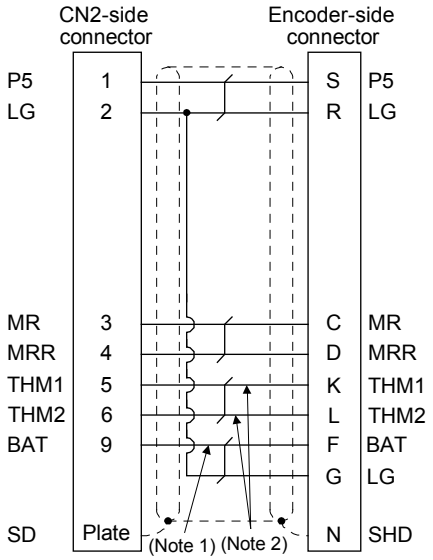

MR-ENECBL20M-H-MTH

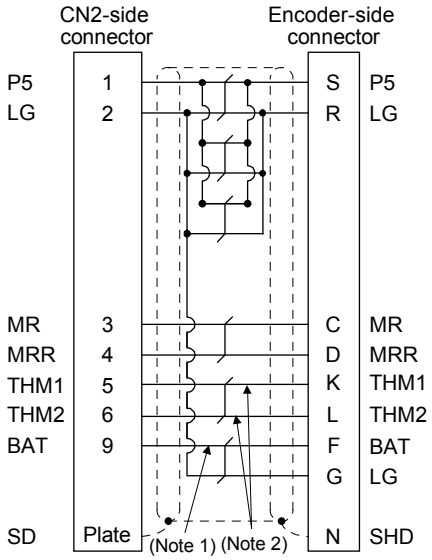

MR-ENECBL30M-H-MTH
MR-ENECBL40M-H-MTH
MR-ENECBL50M-H-MTH

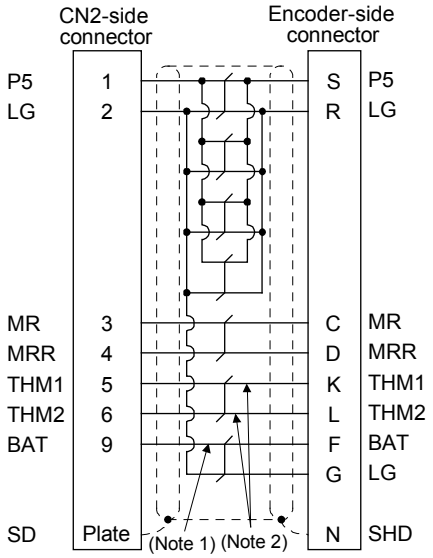

Note 1. Always make connection for use in an absolute position detection system. Wiring is not necessary for use in an incremental system.

2. Always make connection for use with the following servo motors. Wiring is not necessary for use with other servo motors.

- HG-JR22K1M(4)
- HG-JR30K1M(4)
- HG-JR37K1M(4)
- HG-JR45K1M4
- HG-JR55K1M4
- HG-JR15K1(4)
- HG-JR20K1(4)
- HG-JR25K1(4)
- HG-JR30K1(4)
- HG-JR37K1(4)

(c) When fabricating the encoder cable

Prepare the following parts, and fabricate it according to the wiring diagram in (b) of this section. Refer to section 5.6 for the specifications of the cable to use.

Parts (Connector set)	Description	
	Servo amplifier-side connector	Encoder-side connector (DDK)
MR-ENECNS	Receptacle: 36210-0100PL Shell kit: 36310-3200-008 (3M) or Connector set: 54599-1019 (Molex)	Plug: D/MS3106A20-29S(D190) Cable clamp: CE3057-12A-3-D Backshell: CE02-20BS-S-D

(7) MR-BT6VCBL03M

This cable is a battery connection cable. Using this cable with an MR-BAT6V1BJ enables to hold absolute position data recorded in the encoder even if they are disconnected from the servo amplifier. Additionally, you can change the battery with the control circuit power supply off. For details, refer to each servo amplifier instruction manual.

Cable model	Cable length	Application
MR-BT6VCBL03M	0.3 m	For HG-MR/HG-KR/HG-SR/HG-JR/HG-RR/HG-UR series

Connection of servo amplifier and servo motor

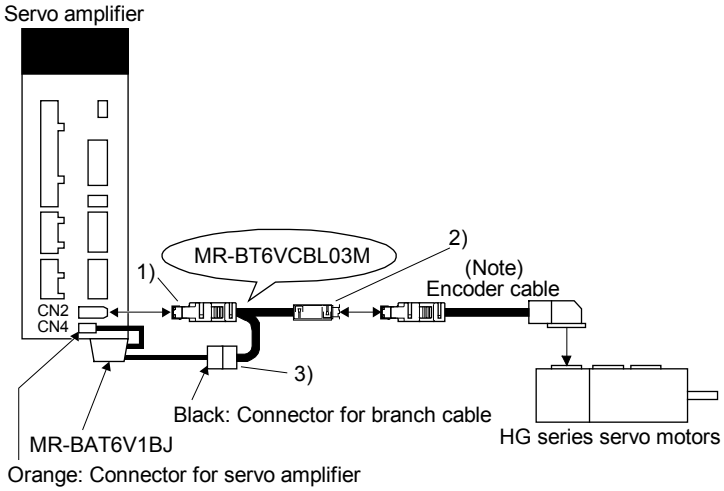

Note. For the encoder cable, refer to (1) to (6) of this section.

Cable model	1) CN2-side connector	2) Junction connector	3) Battery connector
MR-BT6VCBL03M	Receptacle: 36210-0100PL Shell kit: 36310-3200-008 (3M) or Connector set: 54599-1019 (Molex)	Plug: 36110-3000FD Shell kit: 36310-F200-008 (3M)	Connector: DF3-2EP-2C Contact: DF3-EP2428PCFA (Hirose Electric)

(8) MR-J3W03ENCBL_M-A-H

These cables are encoder cables for the HG-AK series servo motors. The numbers in the cable length field of the table indicate the symbol filling the underline "_" in the cable model.

Cable model	Cable length						IP rating	Bending life	Application
	1 m	2 m	5 m	10 m	20 m	30 m			
MR-J3W03ENCBL_M-A-H	1	2	5	10	20	30		Long bending life	HG-AK series

(a) Connection of servo amplifier and servo motor

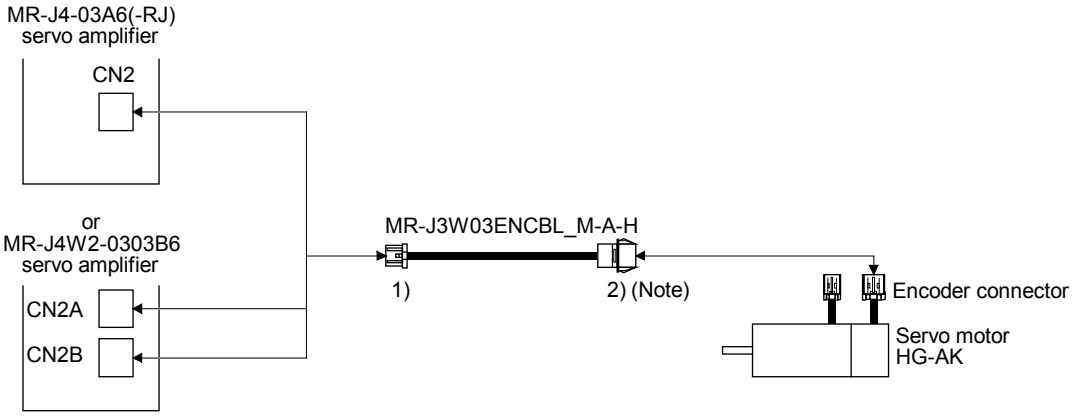

Note. Remove the connector by pressing the lock lever on the encoder connector. You do not need to press the lock lever on the encoder cable.

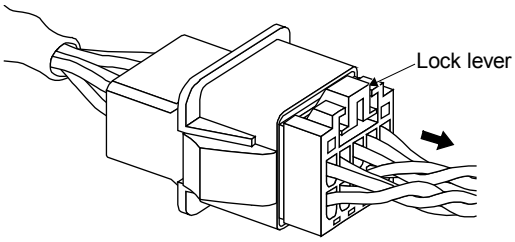

Cable model	1) CN2, CN2A, and CN2B-side connector	2) Encoder-side connector
MR-J3W03ENCBL_ M-A-H	Receptacle housing: 1-1827862-5 Contact: 1827587-2 Crimping tool: 1762846-1 (TE Connectivity) Note. Do not connect anything to the pins shown as ▧.	Tab housing: J21DPM-10V-KX Contact: SJ2M-01GF-M1.0N Crimping tool: YRS-8861 (JST) Note. Do not connect anything to the pins shown as ▧.

(b) Cable internal wiring diagram

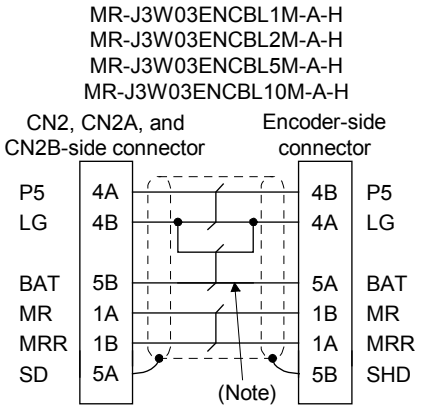

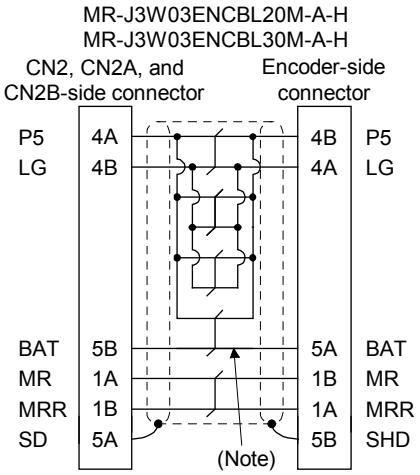

Note. Always make connection for use in an absolute position detection system. Wiring is not necessary for use in an incremental system.

(c) When fabricating the encoder cable

Prepare the following parts, and fabricate it according to the wiring diagram in (8) (b) of this section. Refer to section 5.6 for the specifications of the cable to use.

Connector set model	Description	
	CN2, CN2A, and CN2B side connector	Encoder-side connector
MR-J3W03CN2-2P MR-J3W03CN2-20P	 Receptacle housing: 1-1827862-5 Contact: 1827587-2 (TE Connectivity)	 Tab housing: J21DPM-10V-KX Contact: SJ2M-01GF-M1.0N (JST)

5.3 Servo motor power cable

These cables are servo motor power cables for the HG-MR/HG-KR series servo motors.
The numbers in the cable length field of the table indicate the symbol filling the underline "_" in the cable model.
Refer to section 4.2.1 for wiring.

Cable model	Cable length				IP rating	Bending life	Application
	0.3 m	2 m	5 m	10 m			
MR-PWS1CBL_M-A1-L		2	5	10	IP65	Standard	Load-side lead for HG-MR/HG-KR
MR-PWS1CBL_M-A2-L		2	5	10	IP65	Standard	Opposite to load-side lead for HG-MR/HG-KR
MR-PWS1CBL_M-A1-H		2	5	10	IP65	Long bending life	Load-side lead for HG-MR/HG-KR
MR-PWS1CBL_M-A2-H		2	5	10	IP65	Long bending life	Opposite to load-side lead for HG-MR/HG-KR
MR-PWS2CBL03M-A1-L	03				IP55	Standard	Load-side lead for HG-MR/HG-KR
MR-PWS2CBL03M-A2-L	03				IP55	Standard	Opposite to load-side lead for HG-MR/HG-KR

(1) Connection of servo amplifier and servo motor

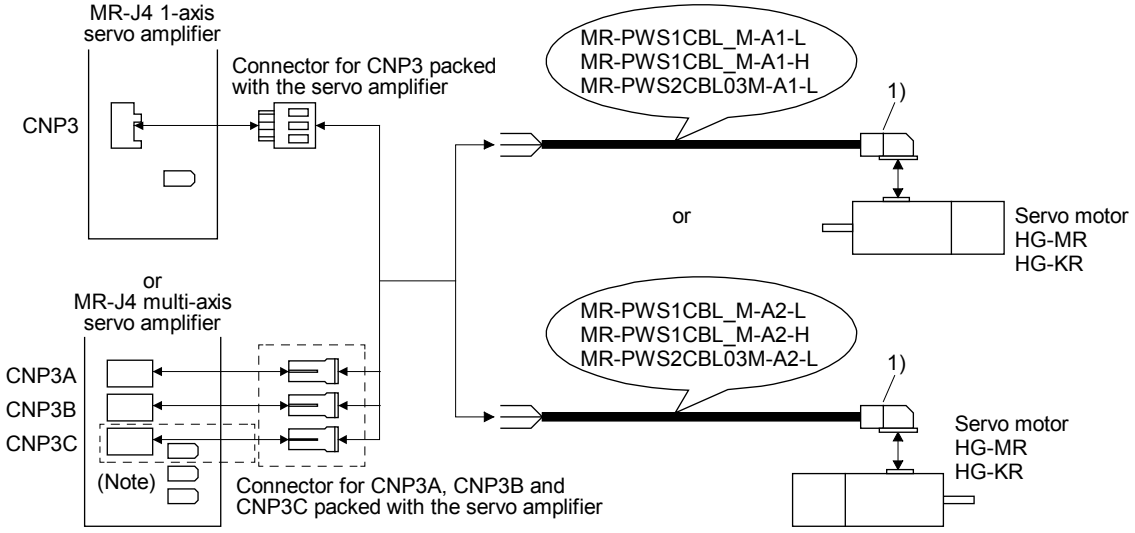

Note. This connection is for the MR-J4 3-axis servo amplifier.

Cable model	1) Servo motor power-side connector	
MR-PWS1CBL_M-A1-L MR-PWS1CBL_M-A2-L MR-PWS1CBL_M-A1-H MR-PWS1CBL_M-A2-H	Connector: KN4FT04SJ1-R Hood, socket insulator Bushing, ground nut Contact: ST-TMH-S-C1B-100-(A534G) Crimping tool: CT170-14-TMH5B (JAE)	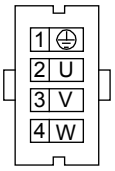 View seen from wiring side.
MR-PWS2CBL03M-A1-L MR-PWS2CBL03M-A2-L	Connector: KN4FT04SJ2-R Hood, socket insulator Bushing, ground nut Contact: ST-TMH-S-C1B-100-(A534G) Crimping tool: CT170-14-TMH5B (JAE)	

(2) Internal wiring diagram

Note. These are not shielded cables.

5.4 Servo motor power cable (for HG-AK series)

These cables are servo motor power cables for the HG-AK series servo motors. The numbers in the cable length field of the table indicate the symbol filling the underline "_" in the cable model. Refer to section 4.2.3 for wiring.

Cable model	Cable length						IP rating	Bending life	Application
	1 m	2 m	5 m	10 m	20 m	30 m			
MR-J4W03PWCBL_M-H	1	2	5	10	20	30		Long bending life	For standard servo motor (without electromagnetic brake)
MR-J4W03PWBRCBL_M-H	1	2	5	10	20	30		Long bending life	For servo motor with an electromagnetic brake

(1) Connection of servo amplifier and servo motor

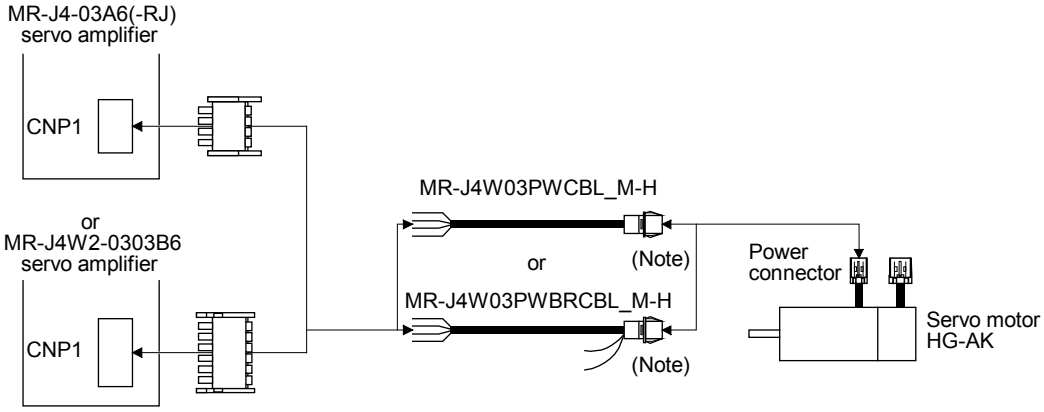

Note. Remove the connector by pressing the lock lever on the power connector. You do not need to press the lock lever on the servo motor power cable.

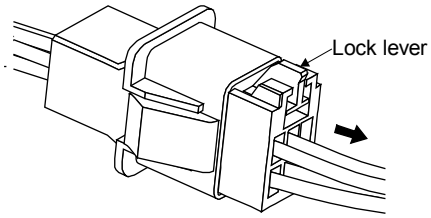

Cable model	Servo motor-side connector
MR-J4W03PWCBL_M-H MR-J4W03PWBRCBL_M-H	Tab housing: J21DPM-06V-KX Contact: SJ2M-21GF-M1.0N Crimping tool: YRF-1120 (JST) 3A 3B B1 B2 2A 2B U W 1A 1B E V

(2) Internal wiring diagram

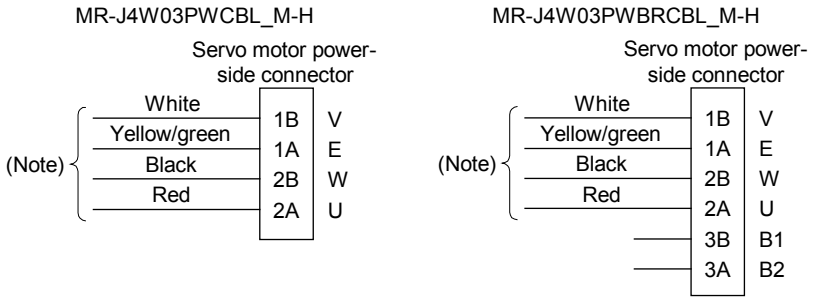

Note. These are not shielded cables.

(3) When fabricating the motor power cable

Prepare the following parts, and fabricate it according to the wiring diagram in (2) of this section. Refer to section 5.6 for the specifications of the cable to use.

Connector set model	Servo motor-side connector
MR-J4W03CNP2-2P	
MR-J4W03CNP2-20P	Tab housing: J21DPM-06V-KX Contact: BJ2M-21GF-M1.0N (JST)

5.5 Electromagnetic brake cable

These cables are electromagnetic brake cables for the HG-MR/HG-KR series servo motors. The numbers in the cable length field of the table indicate the symbol filling the underline "_" in the cable model.
Refer to section 4.2.1 for wiring.

Cable model	Cable length				IP rating	Bending life	Application
	0.3 m	2 m	5 m	10 m			
MR-BKS1CBL_M-A1-L		2	5	10	IP65	Standard	Load-side lead for HG-MR/HG-KR
MR-BKS1CBL_M-A2-L		2	5	10	IP65	Standard	Opposite to load-side lead for HG-MR/HG-KR
MR-BKS1CBL_M-A1-H		2	5	10	IP65	Long bending life	Load-side lead for HG-MR/HG-KR
MR-BKS1CBL_M-A2-H		2	5	10	IP65	Long bending life	Opposite to load-side lead for HG-MR/HG-KR
MR-BKS2CBL03M-A1-L	03				IP55	Standard	Load-side lead for HG-MR/HG-KR
MR-BKS2CBL03M-A2-L	03				IP55	Standard	Opposite to load-side lead for HG-MR/HG-KR

(1) Connection of power supply for electromagnetic brake and servo motor

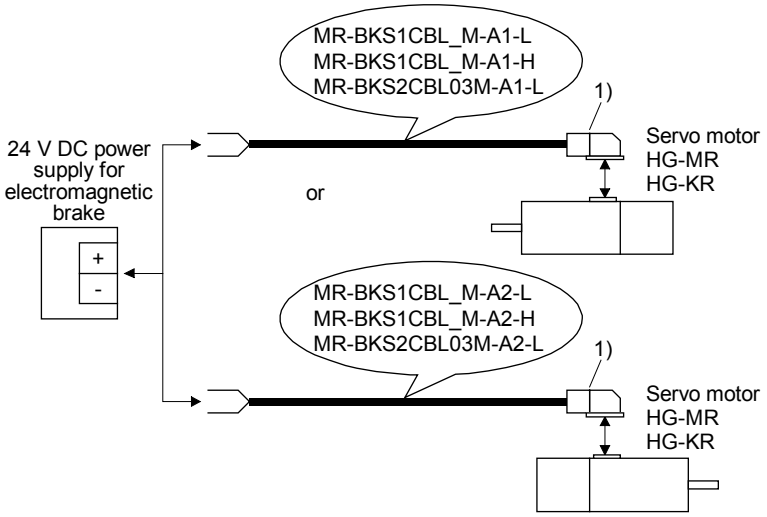

Cable model	1) Connector for electromagnetic brake	
MR-BKS1CBL_M-A1-L	Connector: JN4FT02SJ1-R Hood, socket insulator Bushing, ground nut Contact: ST-TMH-S-C1B-100-(A534G) Crimping tool: CT170-14-TMH5B (JAE)	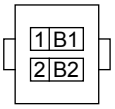 View seen from wiring side.
MR-BKS1CBL_M-A2-L		
MR-BKS1CBL_M-A1-H		
MR-BKS1CBL_M-A2-H		
MR-BKS2CBL03M-A1-L	Connector: JN4FT02SJ2-R Hood, socket insulator Bushing, ground nut Contact: ST-TMH-S-C1B-100-(A534G) Crimping tool: CT170-14-TMH5B (JAE)	
MR-BKS2CBL03M-A2-L		

(2) Internal wiring diagram

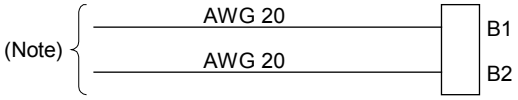

Note. These are not shielded cables.

5.6 Wires for option cables

When fabricating a cable, use the wire models given in the following table or equivalent.

Table 5.1 Wires for option cables

Type	Model	Length [m]	Core size	Number of cores	Characteristics of one core: Structure [Number of wires/mm]	Characteristics of one core: Conductor resistance [Ω/km]	Characteristics of one core: (Note 1) Insulator OD d [mm]	(Note 2) Cable OD [mm]	Wire model (Manufacturer)
Encoder cable	MR-J3ENCBL_M-A1-L MR-J3ENCBL_M-A2-L	2 to 10	AWG 22	6 (3 pairs)	7/0.26	53 or less	1.18	7.1	(Note 3) VSVP 7/0.26 (AWG #22 or equivalent)-3P KB-1655-2 (Bando Densen)
	MR-J3ENCBL_M-A1-H MR-J3ENCBL_M-A2-H	2 to 10	AWG 22	6 (3 pairs)	70/0.08	56 or less	1.17	7.1	(Note 3) TPE・SVP 70/0.08 (AWG #22 or equivalent)-3P KB-2237-2 (Bando Densen)
	MR-J3JCBL03M-A1-L MR-J3JCBL03M-A2-L	0.3	AWG 26	8 (4 pairs)	30/0.08	233 or less	1.2	7.1 ± 0.3	T/2464-1061/IIA-SB 4P×26AWG (Taiyo Cabletec)
	MR-EKCBL_M-L	2 to 10	AWG 28	4 (2 pairs)	7/0.127	232 or less	1.18	7.0	(Note 3) 20276 composite 6-core shielded cable Ban-gi-shi-16395-1 (Bando Densen)
			AWG 22	2	17/0.16	28.7 or less	1.50		
		20・30	AWG 23	12 (6 pairs)	12/0.18	63.6 or less	1.2	8.2 ± 0.3	(Note 3) 20276 VSVPAWG#23×6P KB-0492 (Bando Densen)
	MR-EKCBL_M-H	2 to 10	0.2 mm^2	12 (6 pairs)	40/0.08	105 or less	0.88	7.2	(Note 3) A14B2343 6P (Junkosha)
		20	AWG 24	12 (6 pairs)	40/0.08	105 or less	0.88	7.2	(Note 3) TPE・SVP 40/0.08 (AWG #24 or equivalent)-6P KB-1928-2 (Bando Densen)
		30 to 50	AWG 24	14 (7 pairs)	40/0.08	105 or less	0.88	8.0	(Note 3) TPE・SVP 40/0.08 (AWG #24 or equivalent)-7P KB-1929-2 (Bando Densen)
	MR-J3JSCBL03M-A1-L MR-J3JSCBL03M-A2-L	0.3	AWG 26	8 (4 pairs)	7/0.16	146 or less	1.0	7.1 ± 0.3	(Note 3) VSVP 7/0.16 (AWG #26 or equivalent)-4P Ban-gi-shi-16822 (Bando Densen)
	MR-J3ENSCBL_M-L	2 to 10	AWG 22	6 (3 pairs)	7/0.26	53 or less	1.18	7.1	(Note 3) VSVP 7/0.26 (AWG #22 or equivalent)-3P KB-1655-2 (Bando Densen)
		20/30	AWG 23	12 (6 pairs)	12/0.18	63.3 or less	1.2	8.2 ± 0.3	(Note 3) 20276 VSVPAWG#23×6P KB-0492 (Bando Densen)
	MR-J3ENSCBL_M-H	2 to 10	AWG 22	6 (3 pairs)	70/0.08	56 or less	1.17	7.1	(Note 3) TPE・SVP 70/0.08 (AWG #22 or equivalent)-3P KB-2237-2 (Bando Densen)
		20 to 50	AWG 24	12 (6 pairs)	40/0.08	105 or less	0.88	7.2	(Note 3) TPE・SVP 40/0.08 (AWG #24 or equivalent)-6P KB-1928-2 (Bando Densen)
	MR-ENECBL_M-H-MTH	2 to 10	0.2 mm^2	8 (4 pairs)	40/0.08	105 or less	0.88	7.2	(Note 3) A14B2339 4P (Junkosha)
		20	0.2 mm^2	12 (6 pairs)	40/0.08	105 or less	0.88	7.2	(Note 3) A14B2343 6P (Junkosha)
		30 to 50	0.2 mm^2	14 (7 pairs)	40/0.08	105 or less	0.88	8.0	(Note 3) J14B0238(0.2*7P) (Junkosha)

Type	Model	Length [m]	Core size	Number of cores	Characteristics of one core			(Note 2) Cable OD [mm]	Wire model (Manufacturer)
					Structure [Number of wires/mm]	Conductor resistance [Ω/km]	(Note 1) Insulator OD d [mm]		
Encoder cable	MR-J3W03ENCBL_M-A-H	1 to 10	AWG 22	6	70/0.08	56 or less	1.17	7.1 ± 0.3	(Note 3) TPE•SVP 70/0.08 (AWG #22 or equivalent)-3P KB-2237-2 (Bando Densen)
		20/30	AWG 22	10	70/0.08	56 or less	1.17	7.7 ± 0.3	(Note 3) TPE•SVP 70/0.08 (AWG#22 or equivalent)-5P (Bando Densen)
Servo motor power cable	MR-PWS1CBL_M-A1-L	2 to 10	AWG 18	4	34/0.18	21.8 or less	1.71	6.2 ± 0.3	(Note 4) HRZFEV-A (CL3) AWG 18 4 cores (Dyden)
	MR-PWS1CBL_M-A2-L	2 to 10							
	MR-PWS1CBL_M-A1-H	2 to 10	AWG 19 (0.75 mm$^{2)}$	4	150/0.08	29.1 or less	1.63	5.7 ± 0.5	(Note 4) RMFES-A (CL3X) AWG 19 4 cores (Dyden)
	MR-PWS1CBL_M-A2-H	2 to 10							
	MR-PWS2CBL03M-A1-L	0.3	AWG 19	4	30/0.18	25.8 or less	1.64	-	(Note 3, 5) J11B2330 UL10125 (Junkosha)
	MR-PWS2CBL03M-A2-L	0.3							
	MR-J4W03PWCBL_M-H	1 to 30	AWG 19	4	150/0.08	29.1 or less	1.63	5.7 ± 0.5	(Note 4) RMFES-A(CL3X) AWG 19, 4 cores (Dyden)
	MR-J4W03PWBRCBL_M-H	1 to 30	AWG 19	4	150/0.08	29.1 or less	1.63	5.7 ± 0.5	(Note 4) RMFES-A(CL3X) AWG 19, 4 cores (Dyden)
Electromagnetic brake cable	MR-BKS1CBL_M-A1-L	2 to 10	AWG 20	2	21/0.18	34.6 or less	1.35	4.7 ± 0.1	(Note 4) HRZFEV-A (CL3) AWG 20 2 cores (Dyden)
	MR-BKS1CBL_M-A2-L	2 to 10							
	MR-BKS1CBL_M-A1-H	2 to 10	AWG 20	2	110/0.08	39.0 or less	1.37	4.5 ± 0.3	(Note 4) RMFES-A (CL3X) AWG 20 2 cores (Dyden)
	MR-BKS1CBL_M-A2-H	2 to 10							
	MR-BKS2CBL03M-A1-L	0.3	AWG 20	2	19/0.203	32.0 or less	1.42	-	(Note 3, 5) J11B2331 UL10125 (Junkosha)
	MR-BKS2CBL03M-A2-L	0.3							

Note 1. The following shows the detail of d.

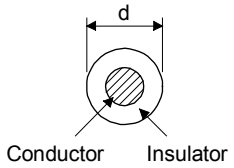

2. Standard OD. Max. OD is about 10% greater.
3. Purchase from Toa Electric Industrial Co. Ltd., Nagoya Branch
4. Purchase from Taisei Co., Ltd.
5. These models consist with solid wires. Specify the color, separately.

MEMO

6. HG-MR SERIES/HG-KR SERIES

This chapter provides information on the servo motor specifications and characteristics. When using the HG-MR/HG-KR series servo motor, always read the Safety Instructions in the beginning of this manual and chapters 1 to 5, in addition to this chapter.

6.1 Model code definition

The following describes what each block of a model name indicates. Not all combinations of the symbols are available.

HG-KR13BJG1DW0C

Appearance

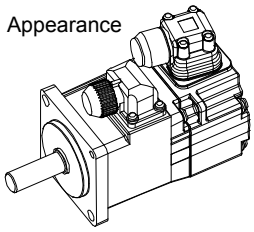

Series

Series	Feature
HG-MR	Ultra-Low inertia/Small capacity
HG-KR	Low inertia/Small capacity

Rated output

Symbol	Rated output [kW]
05	0.05
1	0.1
2	0.2
4	0.4
7	0.75

Rated speed
3000 [r/min]

Electromagnetic brake

Symbol	Electromagnetic brake
None	None
B	With

Oil seal

Symbol	Oil seal
None	None
(Note 2) J	With

Special specification

Symbol	Special specification
None	Standard
(Note 3) W0C	Servo motor with functional safety

Shaft type

Symbol	Shaft shape	HG-MR_ HG-KR_
None	Standard (straight shaft)	053 to 73
(Note 1) K	Keyway shaft (with key)	23 to 73
(Note 1) D	D cut shaft	053/13

Reducer

Symbol	Reducer
None	None
G1	For general industrial machine (flange-mounting)
G5	Flange-mounting flange output type for high precision application
G7	Flange-mounting shaft output type for high precision application

Note 1. The special shaft applies to the standard servo motor and servo motor with an electromagnetic brake. However, the key shaft (with key) also applies to the servo motor with flange-mounting shaft output type reducer for high precision application.
2. For details, contact your local sales office.
3. Refer to section 1.5 for details.

6.2 Combination list of servo motors and servo amplifiers

<table>
<tr><th rowspan="3">Servo motor</th><th colspan="4">Servo amplifier</th></tr>
<tr><th colspan="2">MR-J4 1-axis</th><th rowspan="2">MR-J4 2-axis</th><th rowspan="2">MR-J4 3-axis</th></tr>
<tr><th>200 V class</th><th>100 V class</th></tr>
<tr><td>HG-MR053</td><td rowspan="2">MR-J4-10A
MR-J4-10A-RJ
MR-J4-10B
MR-J4-10B-RJ
MR-J4-10B-RJ010
MR-J4-10B-RJ020
MR-J4-10GF
MR-J4-10GF-RJ</td><td rowspan="2">MR-J4-10A1
MR-J4-10A1-RJ
MR-J4-10B1
MR-J4-10B1-RJ
MR-J4-10B1-RJ020</td><td rowspan="3">MR-J4W2-22B
MR-J4W2-44B</td><td rowspan="3">MR-J4W3-222B
MR-J4W3-444B</td></tr>
<tr><td>HG-MR13</td></tr>
<tr><td>HG-MR23</td><td>MR-J4-20A
MR-J4-20A-RJ
MR-J4-20B
MR-J4-20B-RJ
MR-J4-20B-RJ010
MR-J4-20B-RJ020
MR-J4-20GF
MR-J4-20GF-RJ</td><td>MR-J4-20A1
MR-J4-20A1-RJ
MR-J4-20B1
MR-J4-20B1-RJ
MR-J4-20B1-RJ020</td></tr>
<tr><td>HG-MR43</td><td>MR-J4-40A
MR-J4-40A-RJ
MR-J4-40B
MR-J4-40B-RJ
MR-J4-40B-RJ010
MR-J4-40B-RJ020
MR-J4-40GF
MR-J4-40GF-RJ</td><td>MR-J4-40A1
MR-J4-40A1-RJ
MR-J4-40B1
MR-J4-40B1-RJ
MR-J4-40B1-RJ020</td><td>MR-J4W2-44B
MR-J4W2-77B
MR-J4W2-1010B</td><td>MR-J4W3-444B</td></tr>
<tr><td>HG-MR73</td><td>MR-J4-70A
MR-J4-70A-RJ
MR-J4-70B
MR-J4-70B-RJ
MR-J4-70B-RJ010
MR-J4-70B-RJ020
MR-J4-70GF
MR-J4-70GF-RJ</td><td></td><td>MR-J4W2-77B
MR-J4W2-1010B</td><td></td></tr>
<tr><td>HG-KR053</td><td rowspan="2">MR-J4-10A
MR-J4-10A-RJ
MR-J4-10B
MR-J4-10B-RJ
MR-J4-10B-RJ010
MR-J4-10B-RJ020
MR-J4-10GF
MR-J4-10GF-RJ</td><td rowspan="2">MR-J4-10A1
MR-J4-10A1-RJ
MR-J4-10B1
MR-J4-10B1-RJ
MR-J4-10B1-RJ020</td><td rowspan="3">MR-J4W2-22B
MR-J4W2-44B</td><td rowspan="3">MR-J4W3-222B
MR-J4W3-444B</td></tr>
<tr><td>HG-KR13</td></tr>
<tr><td>HG-KR23</td><td>MR-J4-20A
MR-J4-20A-RJ
MR-J4-20B
MR-J4-20B-RJ
MR-J4-20B-RJ010
MR-J4-20B-RJ020
MR-J4-20GF
MR-J4-20GF-RJ</td><td>MR-J4-20A1
MR-J4-20A1-RJ
MR-J4-20B1
MR-J4-20B1-RJ
MR-J4-20B1-RJ020</td></tr>
<tr><td>HG-KR43</td><td>MR-J4-40A
MR-J4-40A-RJ
MR-J4-40B
MR-J4-40B-RJ
MR-J4-40B-RJ010
MR-J4-40B-RJ020
MR-J4-40GF
MR-J4-40GF-RJ</td><td>MR-J4-40A1
MR-J4-40A1-RJ
MR-J4-40B1
MR-J4-40B1-RJ
MR-J4-40B1-RJ020</td><td>MR-J4W2-44B
MR-J4W2-77B
MR-J4W2-1010B</td><td>MR-J4W3-444B</td></tr>
</table>

Servo motor	Servo amplifier			
	MR-J4 1-axis		MR-J4 2-axis	MR-J4 3-axis
	200 V class	100 V class		
HG-KR73	MR-J4-70A MR-J4-70A-RJ MR-J4-70B MR-J4-70B-RJ MR-J4-70B-RJ010 MR-J4-70B-RJ020 MR-J4-70GF MR-J4-70GF-RJ		MR-J4W2-77B MR-J4W2-1010B	

6.3 Standard specifications

6.3.1 Standard specifications list

Servo motor / Item			HG-MR series (ultra-low inertia/small capacity)					HG-KR series (low inertia/small capacity)				
			053(B)	13(B)	23(B)	43(B)	73(B)	053(B)	13(B)	23(B)	43(B)	73(B)
Power supply capacity			Refer to "Power supply equipment capacity and generated loss of servo amplifiers" in Servo Amplifier Instruction Manual.									
Continuous running duty (Note 1)	Rated output [kW]		0.05	0.1	0.2	0.4	0.75	0.05	0.1	0.2	0.4	0.75
	Rated torque [N•m]		0.16	0.32	0.64	1.3	2.4	0.16	0.32	0.64	1.3	2.4
Maximum torque (Note 10) [N•m]			0.48	0.95	1.9	3.8	7.2	0.56	1.1	2.2	4.5	8.4
Rated speed (Note 1) [r/min]			3000					3000				
Maximum speed (Note 10) [r/min]			6000					6000				
Instantaneous permissible speed (Note 10) [r/min]			6900					6900				
Power rate at continuous rated torque	Standard [kW/s]		15.6	33.8	46.9	114.2	97.3	5.63	13.0	18.3	43.7	45.2
	With an electromagnetic brake [kW/s]		11.3	28.0	37.2	98.8	82.1	5.37	12.1	16.7	41.3	41.6
Rated current [A]			1.0	0.9	1.5	2.6	5.8	0.9	0.8	1.3	2.6	4.8
Maximum current [A]			3.1	2.5	5.3	9.0	20	3.2	2.5	4.6	9.1	17
Moment of inertia J (Note 3)	Standard [× 10^{-4} kg•m^2]		0.0162	0.0300	0.0865	0.142	0.586	0.0450	0.0777	0.221	0.371	1.26
	With an electromagnetic brake [× 10^{-4} kg•m^2]		0.0224	0.0362	0.109	0.164	0.694	0.0472	0.0837	0.243	0.393	1.37
Recommended load to motor inertia ratio (Note 2, 10)			35 times or less	32 times or less				17 times or less		26 times or less	25 times or less	17 times or less
Speed/position detector			22-bit encoder common to absolute position/incremental systems (resolution per servo motor revolution: 4194304 pulses/rev)									
Oil seal			None	None (Note 11)				None	None (Note 11)			
Insulation class			130 (B)									
Structure			Totally-enclosed, natural-cooling (IP rating: IP65 (Note 4, 9))									
Environment	Ambient temperature	Operation	0 °C to 40 °C (non-freezing)									
		Storage	-15 °C to 70 °C (non-freezing)									
	Ambient humidity	Operation	80 %RH or less (non-condensing)									
		Storage	90 %RH or less (non-condensing)									
	Ambience		Indoors (no direct sunlight), free from corrosive gas, flammable gas, oil mist, dust, and dirt									
	Altitude		Max. 2000 m above sea level (Note 12)									
	Vibration resistance (Note 6)		X, Y: 49 m/s^2									
Vibration rank (Note 7)			V10									
Permissible load for the shaft (Note 8, 10)	L [mm]		25		30		40	25		30		40
	Radial [N]		88		245		392	88		245		392
	Thrust [N]		59		98		147	59		98		147
Mass (Note 3)	Standard [kg]		0.34	0.54	0.91	1.4	2.8	0.34	0.54	0.91	1.4	2.8
	With an electromagnetic brake [kg]		0.54	0.74	1.3	1.8	3.8	0.54	0.74	1.3	1.8	3.8

Note 1. When the power supply voltage drops, the output and the rated speed cannot be guaranteed.
2. If the load to motor inertia ratio exceeds the indicated value, contact your local sales office.
3. Refer to the dimensions for the geared servo motor.
4. Except for the shaft-through portion. IP classifies the degrees of protection provided against the intrusion of solid objects and water in electrical enclosures.
5. In the environment where the servo motor is exposed to oil mist, oil, or water, the servo motor of the standard specifications may not be usable. Please contact your local sales office.
6. The following figure shows the vibration directions. The value is the one at the part that indicates the maximum value (normally the opposite to load-side bracket). When the servo motor stops, fretting is likely to occur at the bearing. Therefore, suppress the vibration to about half of the permissible value. Note that this does not apply to the geared servo motor.

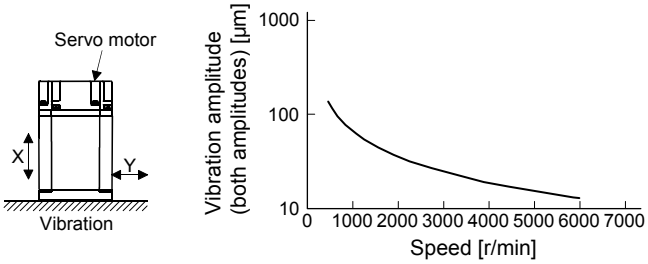

7. V10 indicates that the amplitude of a single servo motor is 10 μm or less. The following figure shows the servo motor mounting position for measurement and the measuring position.

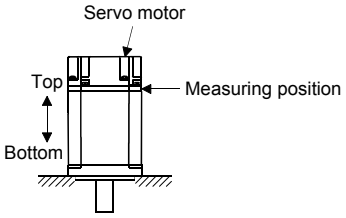

8. The following shows permissible load for the shaft. Do not subject the shaft to load greater than the value in the specifications list. The value assumes that the load is applied independently.

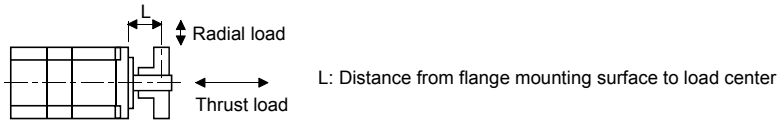

9. For the geared servo motor, the reducer area is IP44-equivalent.
10. Refer to section 6.6 for the geared servo motor.
11. The servo motors with an oil seal are also available. For details, contact your local sales office.
12. Follow the restrictions in section 2.10 when using the servo amplifiers at altitude exceeding 1000 m and up to 2000 m above sea level.

6.3.2 Torque characteristics

> POINT
>
> ●For the system where the unbalanced torque occurs, such as a vertical axis system, the unbalanced torque of the machine should be kept at 70% or less of the rated torque.

When the power supply input of the servo amplifier is 3-phase 200 V AC or 1-phase 230 V AC, the torque characteristic is indicated by the heavy line. For the 1-phase 200 V AC power supply, part of the torque characteristic is indicated by the thin line. For the 1-phase 100 V AC power supply, part of the torque characteristic is indicated by the broken line.

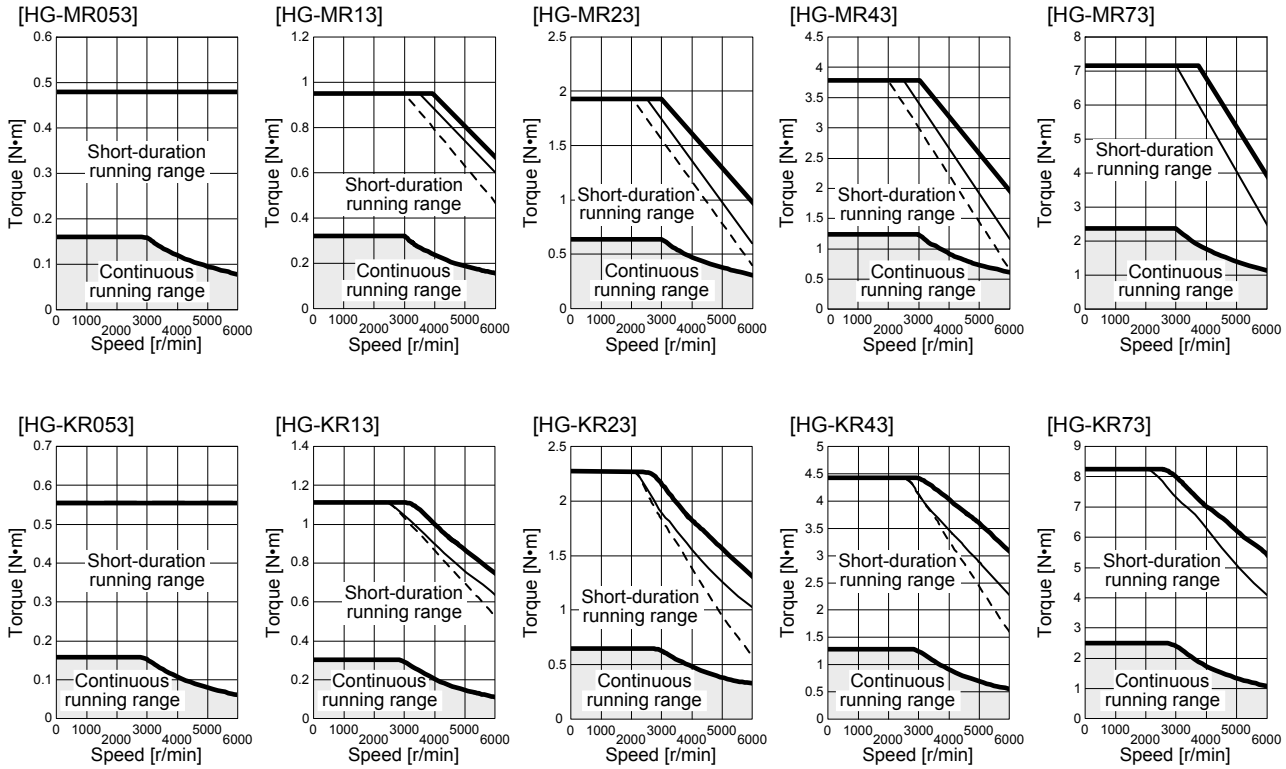

6.4 Electromagnetic brake characteristics

⚠CAUTION

- The electromagnetic brake is provided to prevent a drop at a power failure or servo alarm occurrence during vertical drive or to hold a shaft at a stop. Do not use it for normal braking (including braking at servo-lock).
- Before performing the operation, be sure to confirm that the electromagnetic brake operates properly.
- The operation time of the electromagnetic brake differs depending on the power supply circuit you use. Be sure to check the operation delay time with a real machine.

The characteristics of the electromagnetic brake provided for the servo motor with an electromagnetic brake are indicated below.

Item \ Servo motor		HG-MR Series/HG-KR Series				
		053B	13B	23B	43B	73B
Type (Note 1)		Spring actuated type safety brake				
Rated voltage (Note 4)		24 V DC $^{0}_{-10\%}$				
Power consumption	[W] at 20 °C	6.3		7.9		10
Coil resistance (Note 6)	[Ω]	91.0		73.0		57.0
Inductance (Note 6)	[H]	0.15		0.18		0.13
Brake static friction torque	[N•m]	0.32		1.3		2.4
Release delay time (Note 2)	[s]	0.03		0.03		0.04
Braking delay time (Note 2) [s]	DC off	0.01		0.02		0.02
Permissible braking work	Per braking [J]	5.6		22		64
	Per hour [J]	56		220		640
Brake looseness at servo motor shaft (Note 5)	[degrees]	2.5		1.2		0.9
Brake life (Note 3)	Number of brakings [times]	20000				
	Work per braking [J]	5.6		22		64
Selection example of surge absorbers to be used (Note 7, 8)	For the suppressed voltage 125 V	TND20V-680KB				
	For the suppressed voltage 350 V	TND10V-221KB				

Note
1. There is no manual release mechanism. When it is necessary to hand-turn the servo motor shaft for machine centering, etc., use a separate 24 V DC power supply to release the brake electrically.
2. The value for initial on gap at 20 °C.
3. The brake gap will increase as the brake lining wears, but the gap is not adjustable.
   The brake life indicated is the number of braking cycles after which adjustment will be required.
4. Always prepare a power supply exclusively used for the electromagnetic brake.
5. These are design values. These are not guaranteed values.
6. These are measured values. These are not guaranteed values.
7. Select the electromagnetic brake control relay properly, considering the characteristics of the electromagnetic brake and surge absorber. When you use a diode for a surge absorber, the electromagnetic braking time will be longer.
8. Manufactured by Nippon Chemi-Con Corporation.

6.5 Servo motors with special shafts

The servo motors with special shafts indicated by the symbols (K and D) in the table are available. K and D are the symbols included in the servo motor model names. Refer to section 6.6.2 (4) for geared servo motors with special shaft.

Servo motor	Shaft shape	
	Key shaft (with key)	D cut shaft
HG-MR053(B)_ HG-MR13(B)_ HG-KR053(B)_ HG-KR13(B)_		D
HG-MR23(B)_ HG-MR43(B)_ HG-MR73(B)_ HG-KR23(B)_ HG-KR43(B)_ HG-KR73(B)_	K	

6.5.1 Key shaft (with 2 round end key)

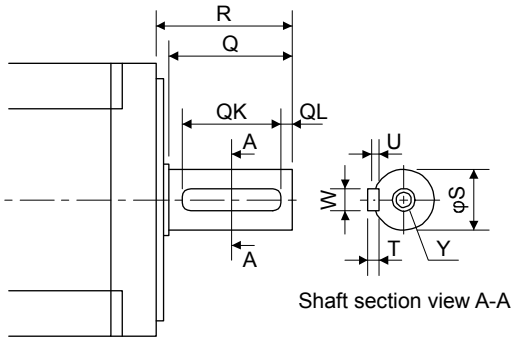

Variable dimension table [Unit: mm]

Servo motor	Variable dimensions								
	S	R	Q	W	QK	QL	U	T	Y
HG-MR23(B)K HG-MR43(B)K HG-KR23(B)K HG-KR43(B)K	14h6	30	26	5	20	3	3	5	M4 Screw hole depth 15
HG-MR73(B)K HG-KR73(B)K	19h6	40	36	6	25	5	3.5	6	M5 Screw hole depth 20

6.5.2 D cut shaft

[Unit: mm]

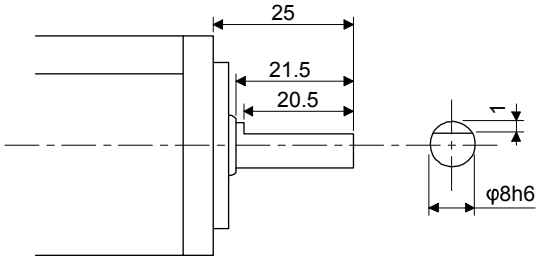

6.6 Geared servo motors

⚠CAUTION ●For the geared servo motor, remove the oil before transportation and installation. Tipping over the reducer filled with oil can cause oil leakage.

POINT

●Geared servo motors are not included in the HG-MR series.

Servo motors are available with a reducer designed for general industrial machines and high precision applications.
Servo motors with an electromagnetic brake are also available.

6.6.1 For general industrial machines (G1)

(1) Reduction ratio
The following table indicates the reduction ratios and actual reduction ratios of the geared servo motor for general industrial machines.

Servo motor	Nominal reduction ratio	Actual reduction ratio
HG-KR053(B)G1	1/5	9/44
	1/12	49/576
	1/20	25/484
HG-KR13(B)G1	1/5	9/44
	1/12	49/576
	1/20	25/484
HG-KR23(B)G1	1/5	19/96
	1/12	961/11664
	1/20	513/9984
HG-KR43(B)G1	1/5	19/96
	1/12	961/11664
	1/20	7/135
HG-KR73(B)G1	1/5	1/5
	1/12	7/87
	1/20	625/12544

(2) Specifications

<table>
<tr><th colspan="2">Item</th><th colspan="5">Description</th></tr>
<tr><td colspan="2">Mounting method</td><td colspan="5">Flange mounting</td></tr>
<tr><td colspan="2">Mounting direction</td><td colspan="5">In any directions</td></tr>
<tr><td rowspan="3">Lubrication method</td><td colspan="2">Grease lubrication (already packed)</td></tr>
<tr><td rowspan="2">Packed with</td><td>50 W/100 W</td><td>200 W/400 W
1/12, 1/20</td><td>750 W
1/12</td><td>200 W/400 W
1/5</td><td>750 W
1/5, 1/20</td></tr>
<tr><td>Mobilplex 46 Exxon Mobil</td><td colspan="2">Molynoc AP2
JX Nippon Oil & Energy</td><td colspan="2">Mobil Grease SP
Exxon Mobil</td></tr>
<tr><td colspan="2">Output shaft rotating direction</td><td colspan="5">Same as the servo motor output shaft direction.</td></tr>
<tr><td colspan="2">Backlash (Note 3)</td><td colspan="5">60 minutes or less at reducer output shaft</td></tr>
<tr><td colspan="2">Permissible load inertia moment ratio (converted into equivalent value on servo motor shaft) (Note 1)</td><td colspan="5">50 W/100 W/750 W: 5 times or less
200 W/400 W: 7 times or less</td></tr>
<tr><td colspan="2">Maximum torque</td><td colspan="5">Three times of the servo motor rated torque</td></tr>
<tr><td colspan="2">Maximum speed
(at servo motor shaft)</td><td colspan="5">4500 r/min (permissible instantaneous speed: 5175 r/min)</td></tr>
<tr><td colspan="2">IP rating (reducer area)</td><td colspan="5">IP44 equivalent</td></tr>
<tr><td colspan="2">Reducer efficiency (Note 2)</td><td colspan="5">45% to 75%</td></tr>
</table>

Note 1. If the above indicated value is exceeded, please contact your local sales office.
2. The reducer efficiency differs depending on the reduction ratio. Also, it changes depending on the operating conditions such as the output torque, speed and rotation, temperature, etc. The numerical value in the table is a typical value in the rated torque, rated speed and rotation and typical temperature, and not a guaranteed value.
3. The backlash can be converted: 1 min = 0.0167 °

(3) Permissible loads of servo motor shaft

The permissible radial load in the table is the value measured at the center of the reducer output shaft.

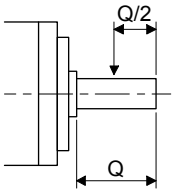

Q: Length of axis (Refer to section 6.8.3, 6.8.4.)

Servo motor	Reduction ratio	Permissible load (Note)	
		Permissible radial load [N]	Permissible thrust load [N]
HG-KR053(B)G1	1/5	150	200
	1/12	240	320
	1/20	370	450
HG-KR13(B)G1	1/5	150	200
	1/12	240	320
	1/20	370	450
HG-KR23(B)G1	1/5	330	350
	1/12	710	720
	1/20	780	780
HG-KR43(B)G1	1/5	330	350
	1/12	710	720
	1/20	760	760
HG-KR73(B)G1	1/5	430	430
	1/12	620	620
	1/20	970	960

Note. Do not subject the shaft to load greater than the value.
The value in the table assumes that the load is applied independently.

6.6.2 For high precision applications (G5/G7)

(1) Reduction ratio

The symbols (11B, 14A, 20A, and 32A) in the following table indicate the model numbers of the reducers assembled to the servo motors. Servo motors with a reducer having the indicated reduction gear model numbers are available. The reducer model number indicates _ _ _ of the reducer model HPG-_ _ _-05.

Servo motor	Reduction ratio					
	1/5	1/9	1/11	1/21	1/33	1/45
HG-KR053(B)G5 HG-KR053(B)G7	11B/14A	11B	14A			
HG-KR13(B)G5 HG-KR13(B)G7	11B/14A		14A		20A	
HG-KR23(B)G5 HG-KR23(B)G7	14A		14A	20A		
HG-KR43(B)G5 HG-KR43(B)G7	14A		20A		32A	
HG-KR73(B)G5 HG-KR73(B)G7	20A		20A	32A		

(2) Specifications

Item		Description
Mounting method		Flange mounting
Mounting direction		In any directions
Lubrication method		Grease lubrication (already packed)
	Packed with	Harmonic grease SK-2 (Harmonic Drive Systems)
Output shaft rotating direction		Same as the servo motor output shaft direction.
Backlash (Note 3)		3 minutes or less at reducer output shaft
Permissible load inertia moment ratio (when converting into the servo motor shaft) (Note 1)		50 W/100 W/750 W: 10 times or less 200 W/400 W: 14 times or less
Maximum torque		Three times of the servo motor rated torque
Maximum speed (servo motor shaft)		6000 r/min (permissible instantaneous speed: 6900 r/min)
IP rating (reducer area)		IP44 equivalent
Reducer efficiency (Note 2)		50 W (reducer model No. 14A): 22% to 41% 50 W (reducer model No. 11B)/100 W/200 W/400 W/750 W: 58% to 87%

Note 1. If the above indicated value is exceeded, please contact your local sales office.
2. The reducer efficiency differs depending on the reduction ratio. Also, it changes depending on the operating conditions such as the output torque, speed and rotation, temperature, etc. The numerical value in the table is a typical value in the rated torque, rated speed and rotation and typical temperature, and not a guaranteed value.
3. The backlash can be converted: 1 min = 0.0167 °

(3) Permissible loads of servo motor shaft

The radial load point of a high precision reducer is as shown below.

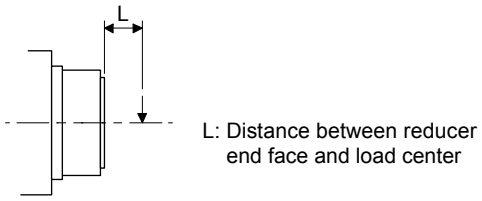

Flange-mounting flange output type for high precision application (G5)

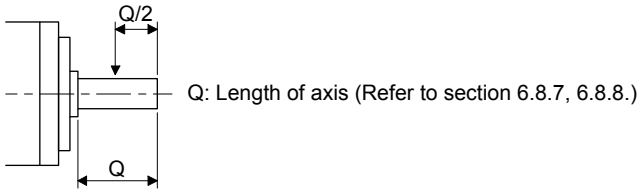

Flange-mounting shaft output type for high precision application (G7)

Servo motor	Reduction ratio	Reducer model number	Permissible load (Note)		
			Radial load point L [mm]	Permissible radial load [N]	Permissible thrust load [N]
HG-KR053(B)G5 HG-KR053(B)G7	1/5	11B	17	93	431
	1/5	14A	23	177	706
	1/9	11B	17	111	514
	1/11	14A	23	224	895
	1/21		23	272	1087
	1/33		23	311	1244
	1/45		23	342	1366
HG-KR13(B)G5 HG-KR13(B)G7	1/5	11B	17	93	431
	1/5	14A	23	177	706
	1/11		23	224	895
	1/21		23	272	1087
	1/33	20A	32	733	2581
	1/45		32	804	2833
HG-KR23(B)G5 HG-KR23(B)G7	1/5	14A	23	177	706
	1/11		23	224	895
	1/21	20A	32	640	2254
	1/33		32	733	2581
	1/45		32	804	2833
HG-KR43(B)G5 HG-KR43(B)G7	1/5	14A	23	177	706
	1/11	20A	32	527	1856
	1/21		32	640	2254
	1/33	32A	57	1252	4992
	1/45		57	1374	5478
HG-KR73(B)G5 HG-KR73(B)G7	1/5	20A	32	416	1465
	1/11		32	527	1856
	1/21	32A	57	1094	4359
	1/33		57	1252	4992
	1/45		57	1374	5478

Note. Do not subject the shaft to load greater than the value.
The value in the table assumes that the load is applied independently.

(4) Servo motor with special shaft

Servo motors with special shafts having keyway (with single pointed keys) are available for the flange-mounting shaft output type for high precision applications (G7).

[Unit: mm]

Servo motor	Reducer model number	Q	φS	W	T	QK	U	Y
HG-KR_(B)G7K	11B	20	10h7	4	4	15	2.5	M3 screw hole depth 6
	14A	28	16h7	5	5	25	3	M4 screw hole depth 8
	20A	42	25h7	8	7	36	4	M6 screw hole depth 12
	32A	82	40h7	12	8	70	5	M10 screw hole depth 20

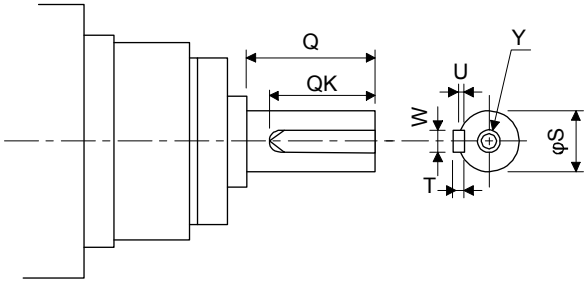

6.7 Mounting connectors

If the connector is not fixed securely, it may come off or may not produce a splash-proof effect during operation.
To achieve the IP rating IP65, pay attention to the following points and install the connectors.

(1) When screwing the connector, hold the connector still and gradually tighten the screws in a crisscross pattern.

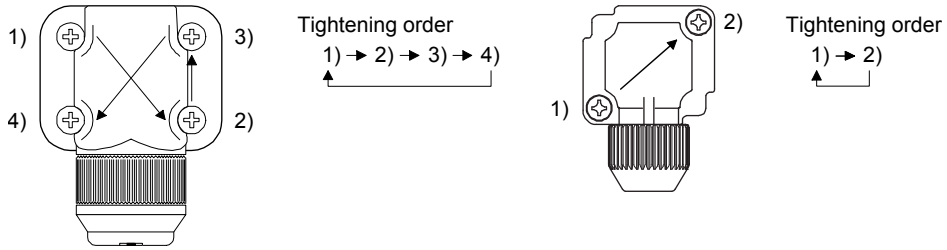

Connector for power supply, connector for encoder

Connector for electromagnetic brake

(2) Tighten the screws evenly. Tightening torques are as indicated below.

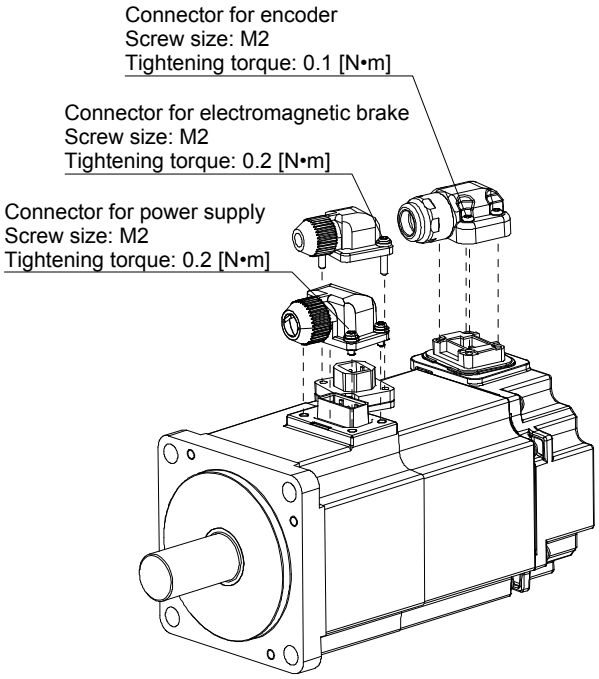

(3) The servo motor fitting part of each connector is provided with a splash-proof seal (O ring). When mounting a connector, use care to prevent the seal (O ring) from dropping and being pinched. If the seal (O ring) has dropped or is pinched, a splash-proof effect is not produced.

6.8 Dimensions

Moment of inertia on the table is the value calculated by converting the total value of moment of inertia for servo motor, reducer, and electromagnetic brake with servo motor shaft.
When running the cables to the load side, take care to avoid interference with the machine. The dimensions without tolerances are general tolerance.
The outer frame of the reducer is a material surface such as casting. Its actual dimensions may be 1 mm to 3 mm larger than the drawing dimensions. Design the machine-side with allowances.

6.8.1 Standard (without electromagnetic brake and reducer)

Model	Output [W]	Moment of inertia J [× 10^{-4} kg•m^2]	Mass [kg]
HG-MR053	50	0.0162	0.34
HG-KR053	50	0.0450	0.34

[Unit: mm]

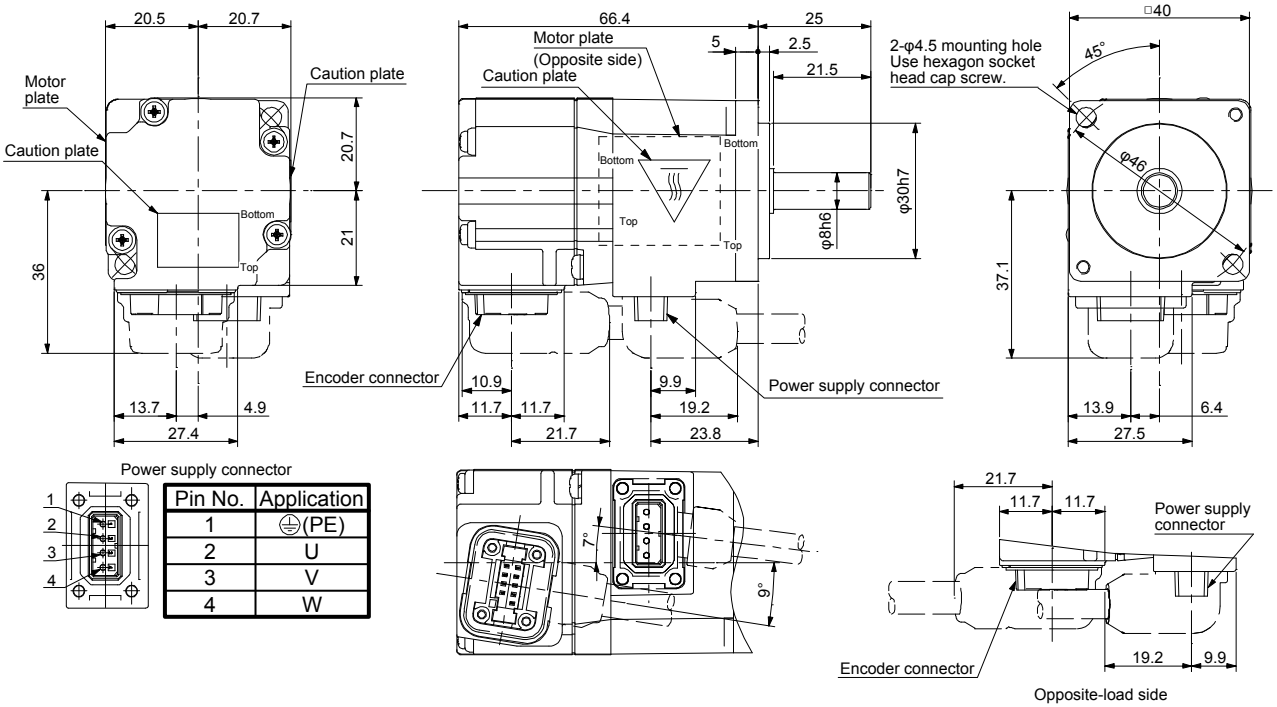

Pin No.	Application
1	⏚(PE)
2	U
3	V
4	W

BC38021C BC38016C

Model	Output [W]	Moment of inertia J [× 10^{-4} kg•m^2]	Mass [kg]
HG-MR13	100	0.0300	0.54
HG-KR13	100	0.0777	0.54

[Unit: mm]

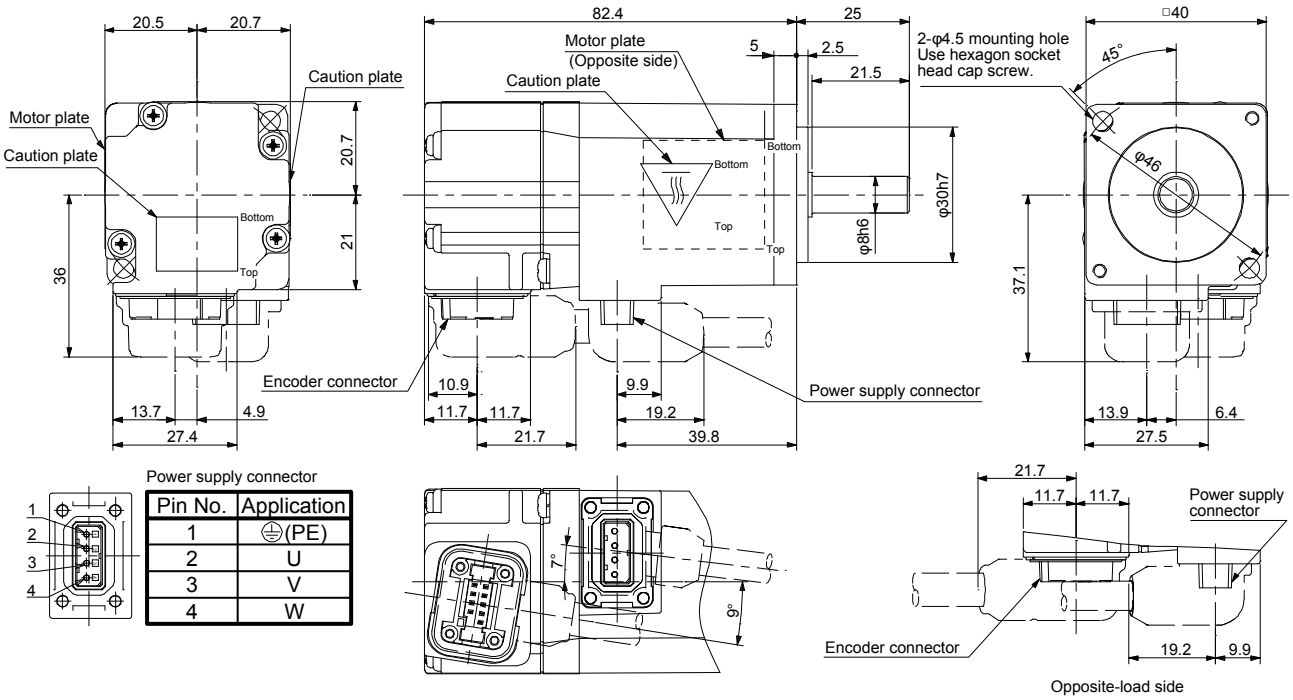

Pin No.	Application
1	⏚(PE)
2	U
3	V
4	W

BC38022C BC38017C

Model	Output [W]	Moment of inertia J [× 10^{-4} kg•m^2]	Mass [kg]
HG-MR23	200	0.0865	0.91
HG-KR23	200	0.221	0.91

[Unit: mm]

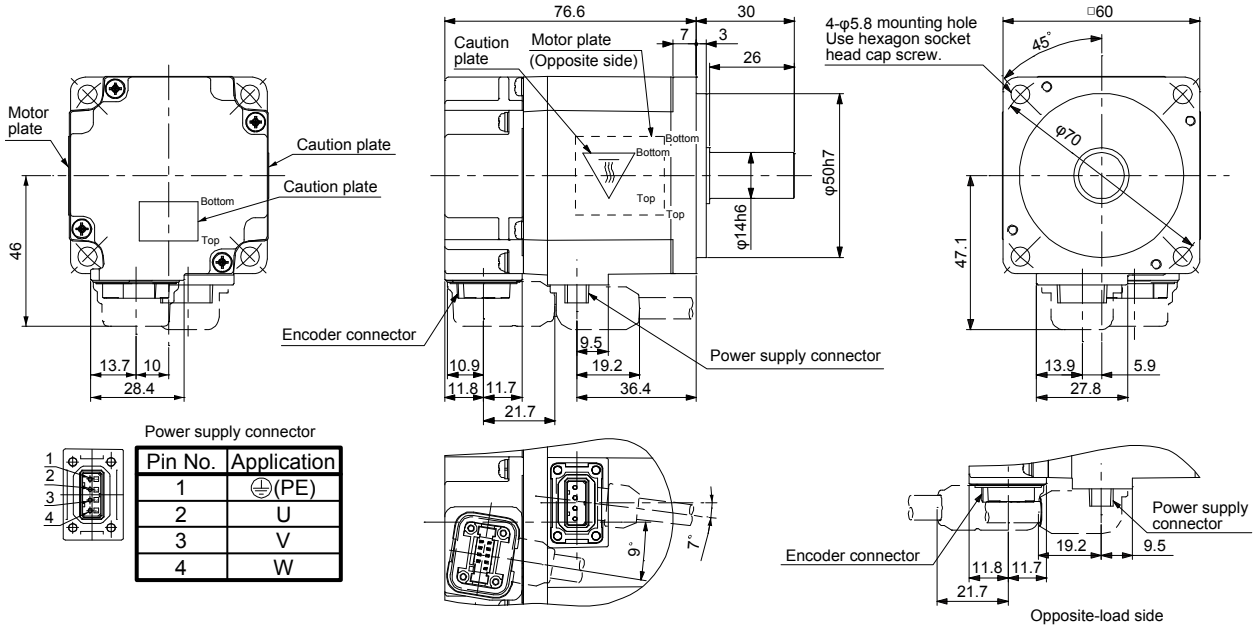

Pin No.	Application
1	⏚(PE)
2	U
3	V
4	W

BC38023B BC38018B

Model	Output [W]	Moment of inertia J [× 10^{-4} kg•m^2]	Mass [kg]
HG-MR43	400	0.142	1.4
HG-KR43	400	0.371	1.4

[Unit: mm]

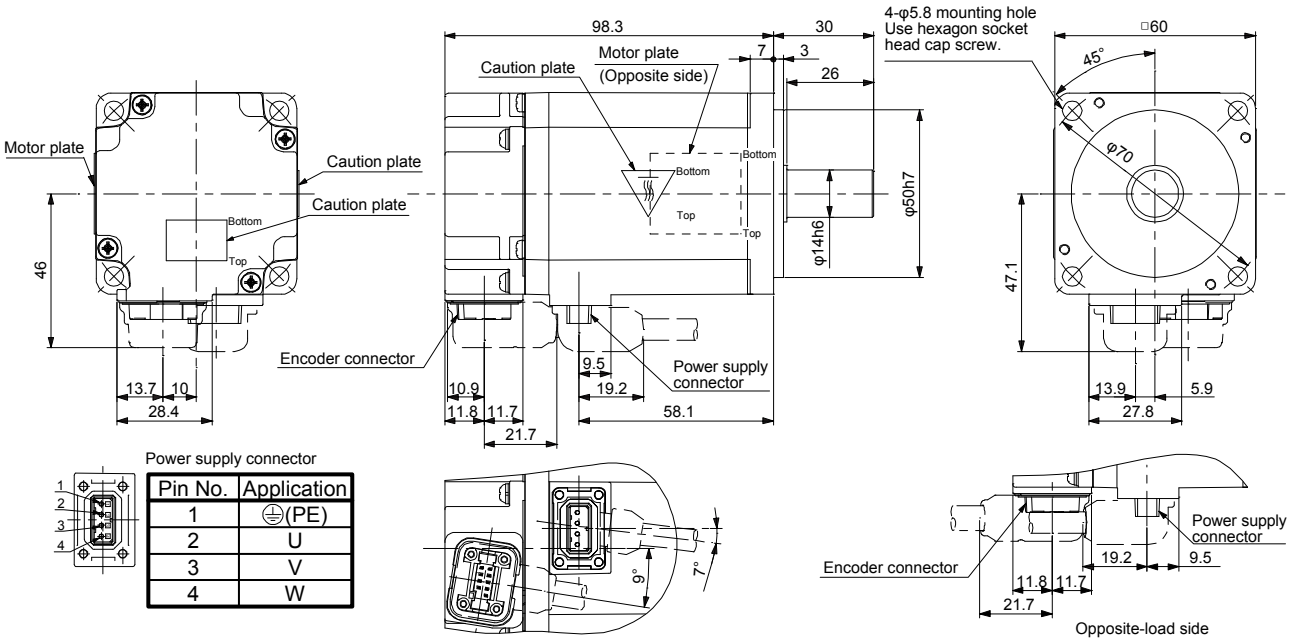

BC38024B BC38019B

Model	Output [W]	Moment of inertia J [× 10^{-4} kg•m^2]	Mass [kg]
HG-MR73	750	0.586	2.8
HG-KR73	750	1.26	2.8

[Unit: mm]

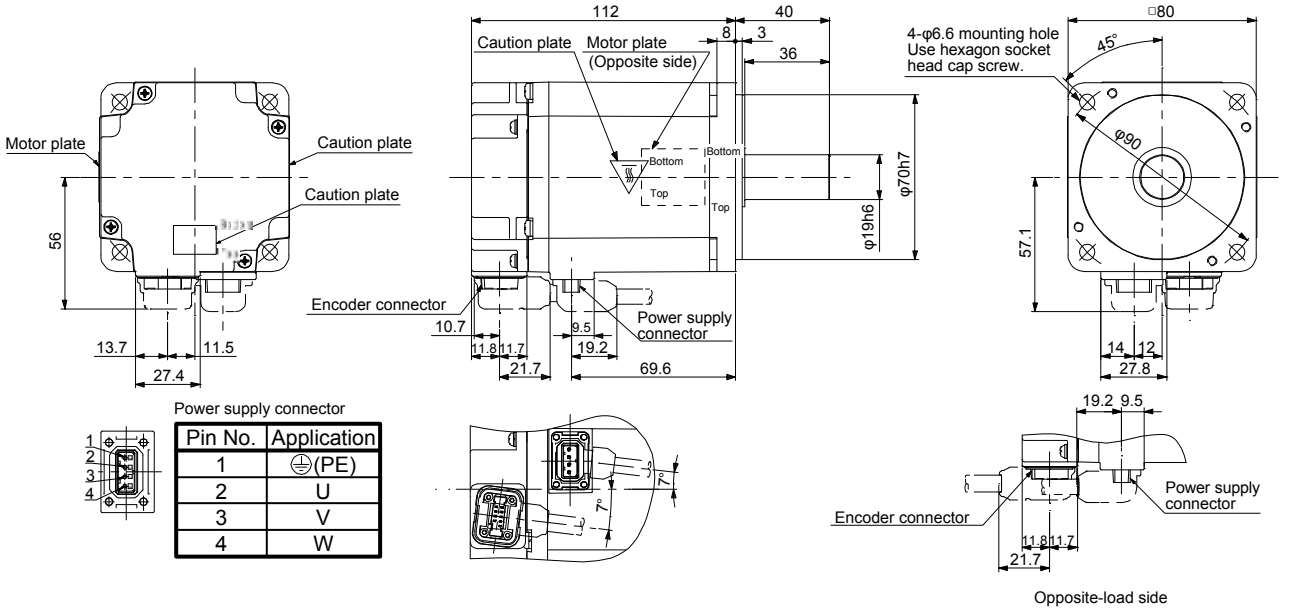

BC38025B BC38020B

6.8.2 With an electromagnetic brake

Model	Output [W]	Brake static friction torque [N•m]	Moment of inertia J [× 10^{-4} kg•m^2]	Mass [kg]
HG-MR053B	50	0.32	0.0224	0.54
HG-KR053B	50	0.32	0.0472	0.54

[Unit: mm]

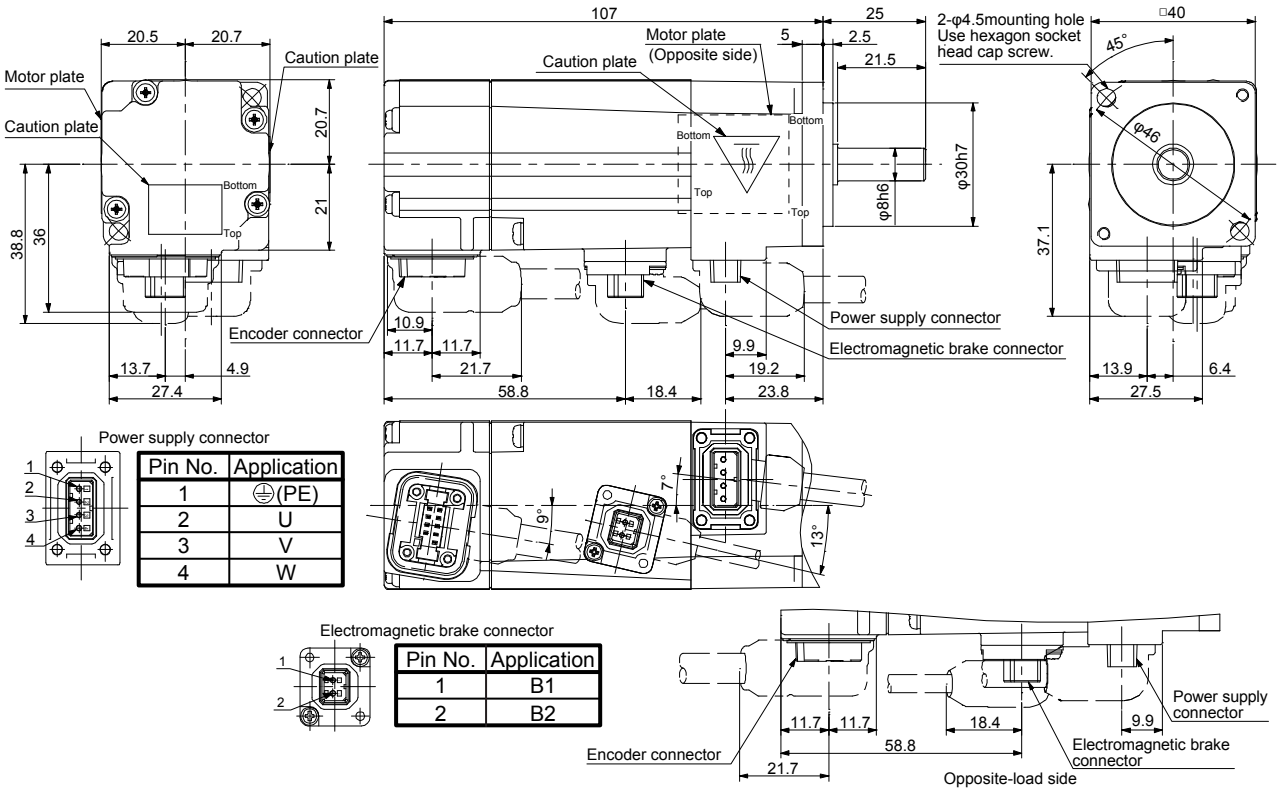

Pin No.	Application
1	⏚(PE)
2	U
3	V
4	W

Pin No.	Application
1	B1
2	B2

BC38180A BC38175A

Model	Output [W]	Brake static friction torque [N•m]	Moment of inertia J [× 10^{-4} kg•m^2]	Mass [kg]
HG-MR13B	100	0.32	0.0362	0.74
HG-KR13B	100	0.32	0.0837	0.74

[Unit: mm]

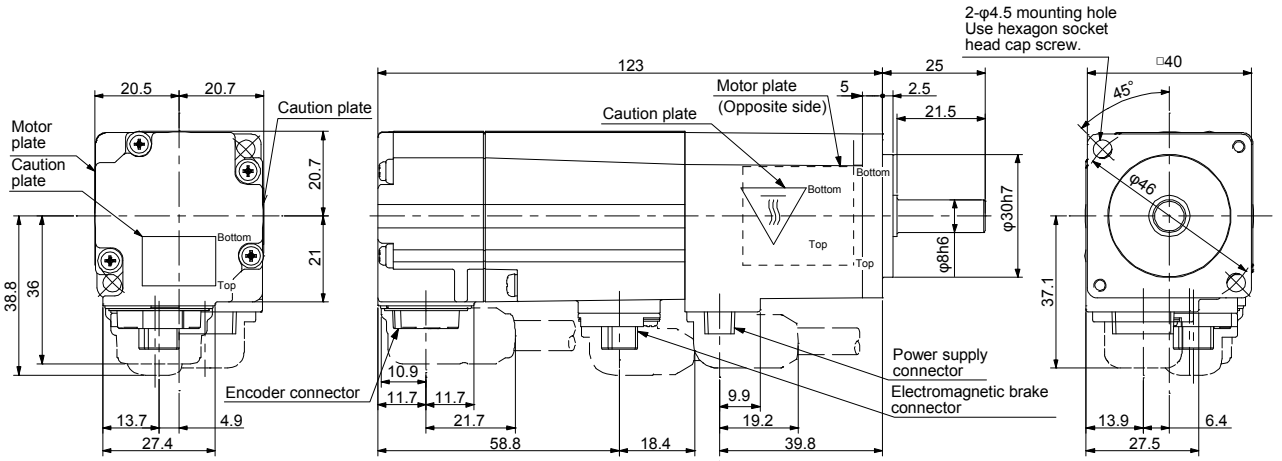

Power supply connector

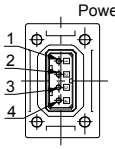

Pin No.	Application
1	⏚(PE)
2	U
3	V
4	W

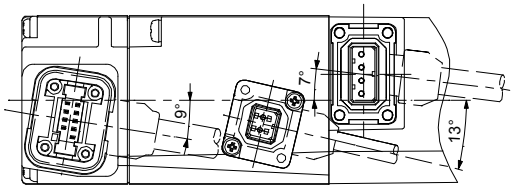

Electromagnetic brake connector

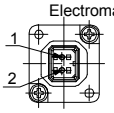

Pin No.	Application
1	B1
2	B2

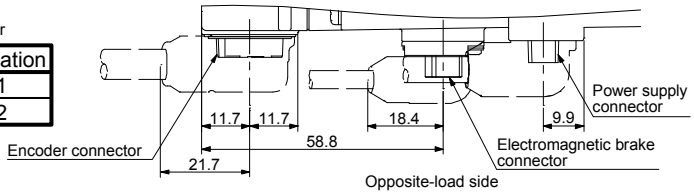

BC38181A BC38176A

Model	Output [W]	Brake static friction torque [N•m]	Moment of inertia J [× 10^{-4} kg•m^2]	Mass [kg]
HG-MR23B	200	1.3	0.109	1.3
HG-KR23B	200	1.3	0.243	1.3

[Unit: mm]

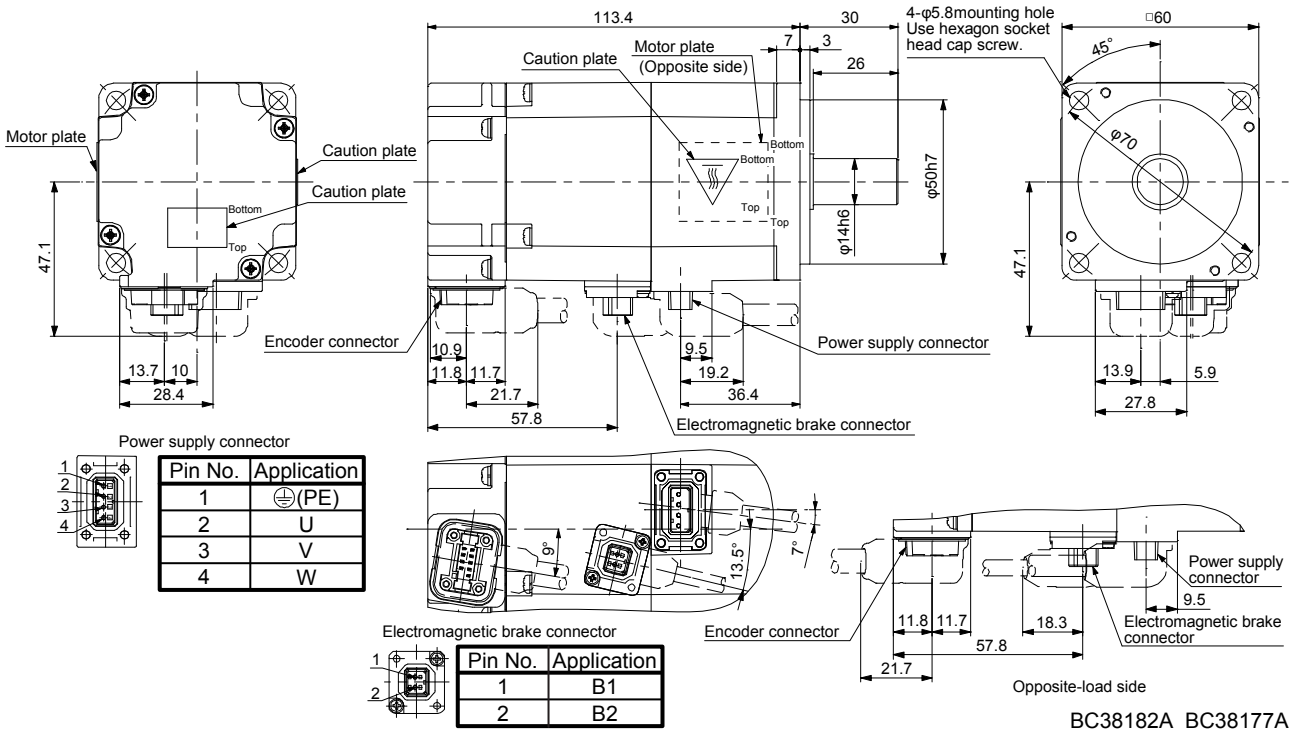

BC38182A BC38177A

Model	Output [W]	Brake static friction torque [N•m]	Moment of inertia J [× 10^{-4} kg•m^2]	Mass [kg]
HG-MR43B	400	1.3	0.164	1.8
HG-KR43B	400	1.3	0.393	1.8

[Unit: mm]

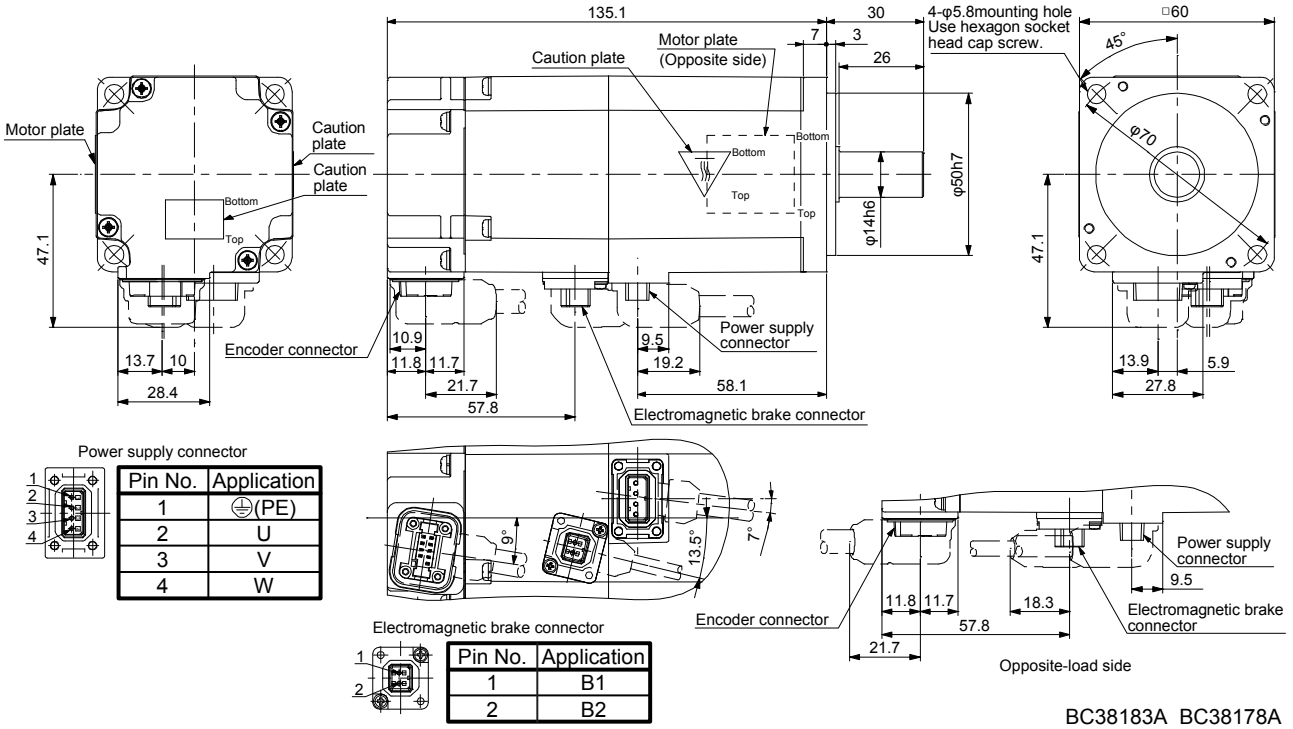

BC38183A BC38178A

Model	Output [W]	Brake static friction torque [N•m]	Moment of inertia J [× 10^{-4} kg•m^2]	Mass [kg]
HG-MR73B	750	2.4	0.694	3.8
HG-KR73B	750	2.4	1.37	3.8

[Unit: mm]

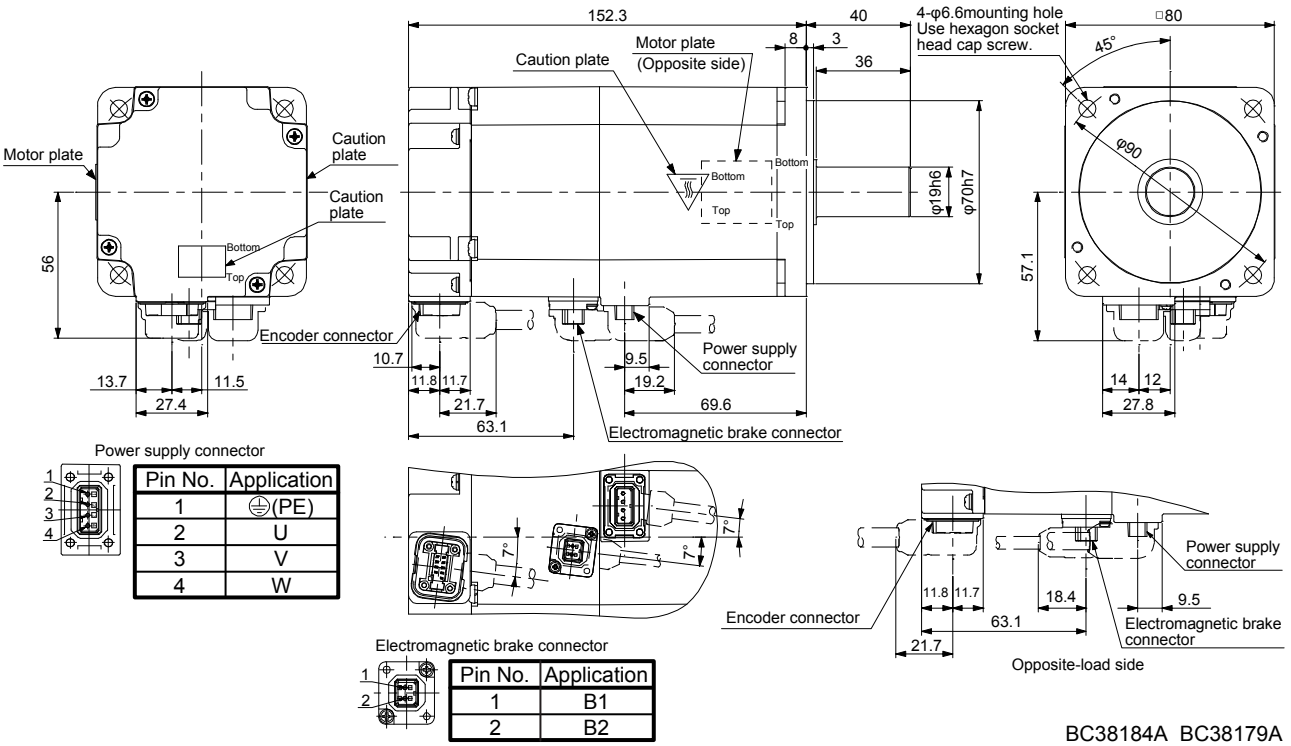

BC38184A BC38179A

6.8.3 For general industrial machine with a reducer (without an electromagnetic brake)

Model	Output [W]	Reducer model	Reduction ratio (actual reduction ratio)	Moment of inertia J [× 10^{-4} kg•m^2]	Mass [kg]
HG-KR053G1	50	K6505	1/5 (9/44)	0.0820	1.4

[Unit: mm]

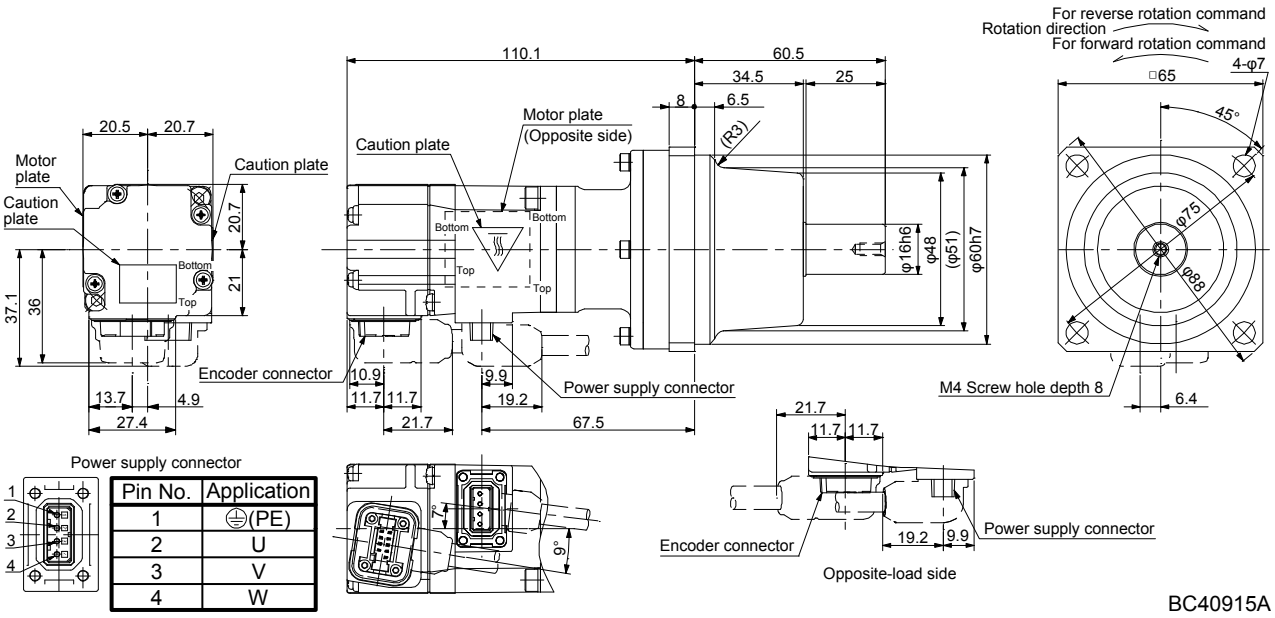

BC40915A

Model	Output [W]	Reducer model	Reduction ratio (actual reduction ratio)	Moment of inertia J [× 10^{-4} kg•m^2]	Mass [kg]
HG-KR053G1	50	K6512	1/12 (49/576)	0.104	1.8
HG-KR053G1	50	K6520	1/20 (25/484)	0.0860	1.8

[Unit: mm]

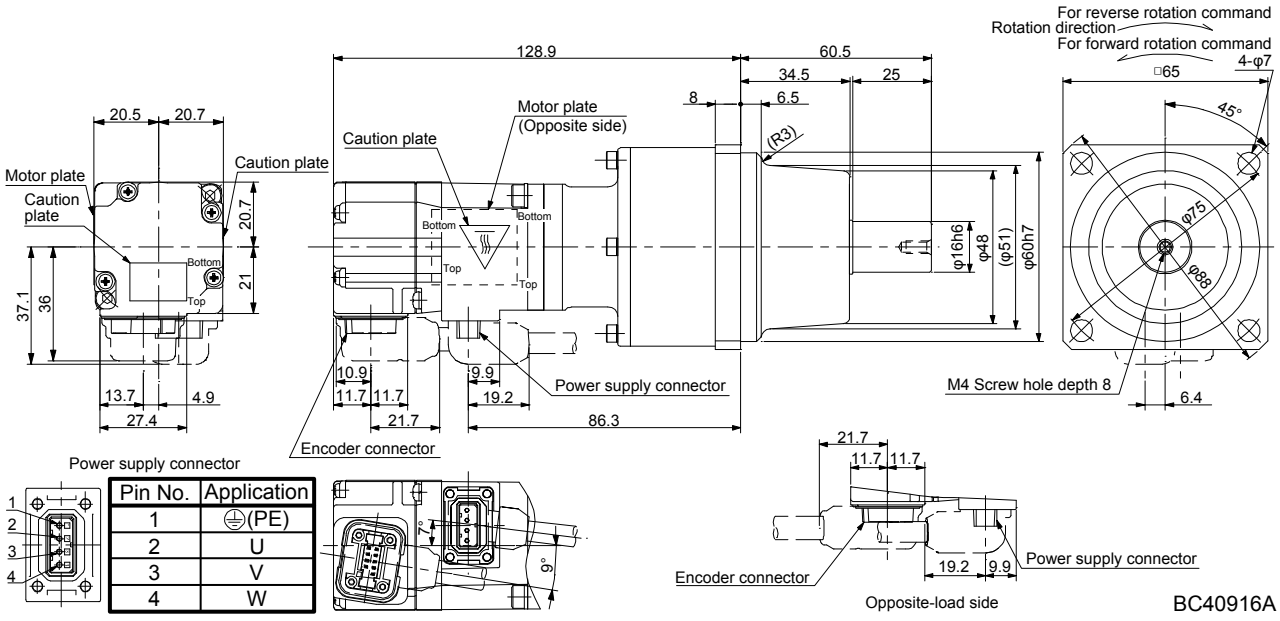

Model	Output [W]	Reducer model	Reduction ratio (actual reduction ratio)	Moment of inertia J [× 10^{-4} kg•m^2]	Mass [kg]
HG-KR13G1	100	K6505	1/5 (9/44)	0.115	1.6

[Unit: mm]

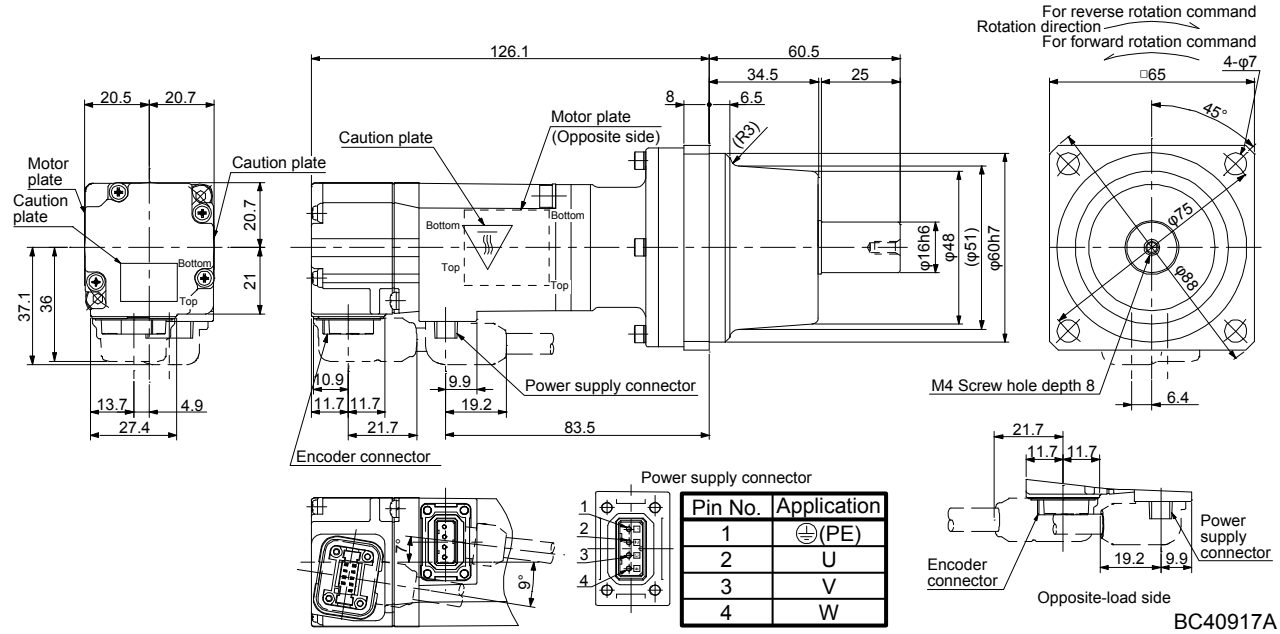

Model	Output [W]	Reducer model	Reduction ratio (actual reduction ratio)	Moment of inertia J [× 10^{-4} kg•m^2]	Mass [kg]
HG-KR13G1	100	K6512	1/12 (49/576)	0.137	2.0
HG-KR13G1	100	K6520	1/20 (25/484)	0.119	2.0

[Unit: mm]

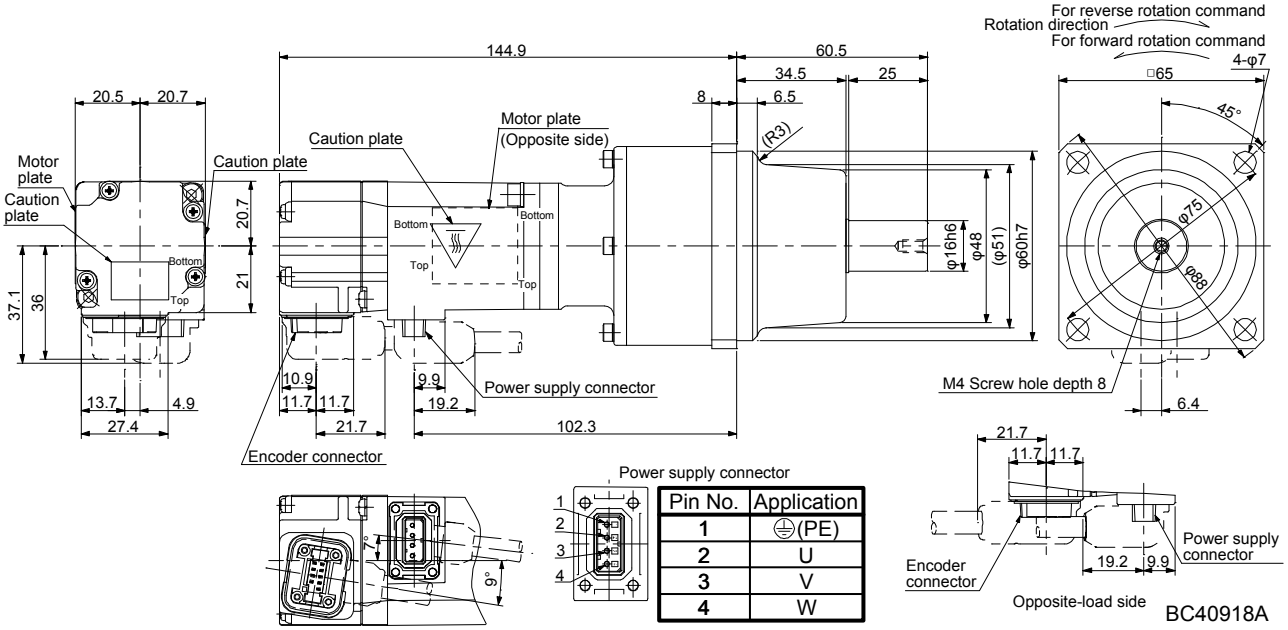

Model	Output [W]	Reducer model	Reduction ratio (actual reduction ratio)	Moment of inertia J [× 10^{-4} kg•m^2]	Mass [kg]
HG-KR23G1	200	K9005	1/5 (19/96)	0.375	3.3

[Unit: mm]

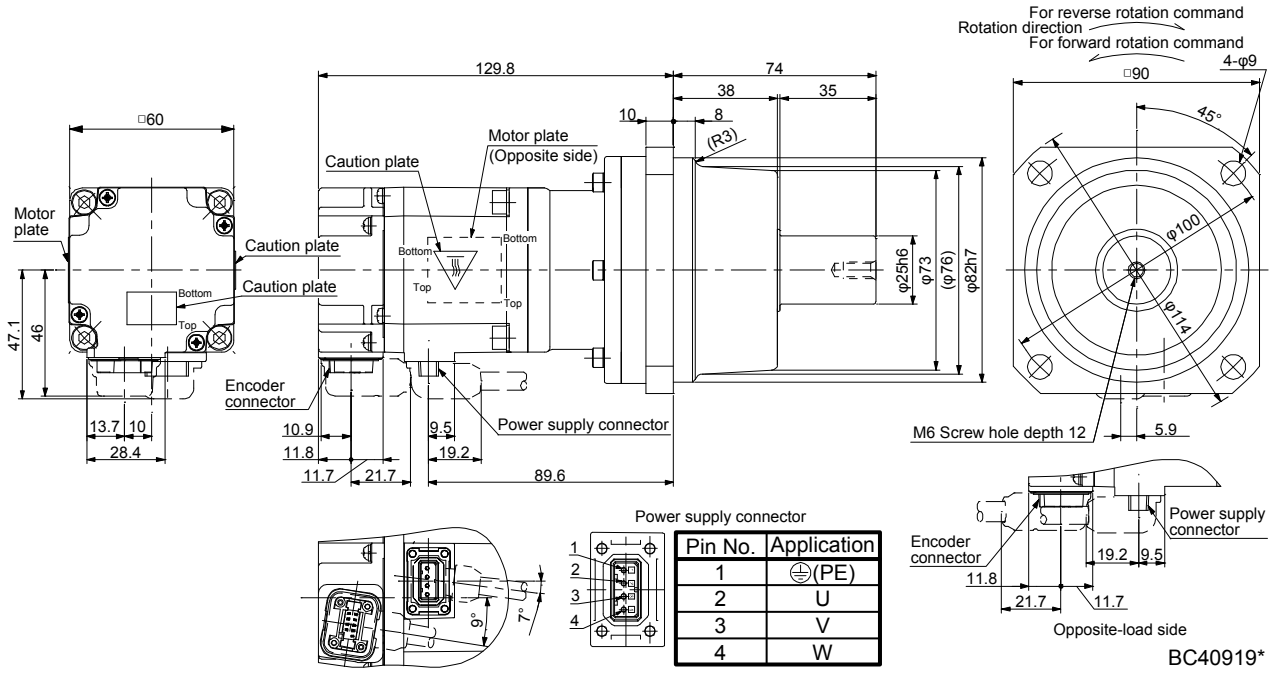

Model	Output [W]	Reducer model	Reduction ratio (actual reduction ratio)	Moment of inertia J [× 10^{-4} kg•m^2]	Mass [kg]
HG-KR23G1	200	K9012	1/12 (961/11664)	0.418	3.9
HG-KR23G1	200	K9020	1/20 (513/9984)	0.391	3.9

[Unit: mm]

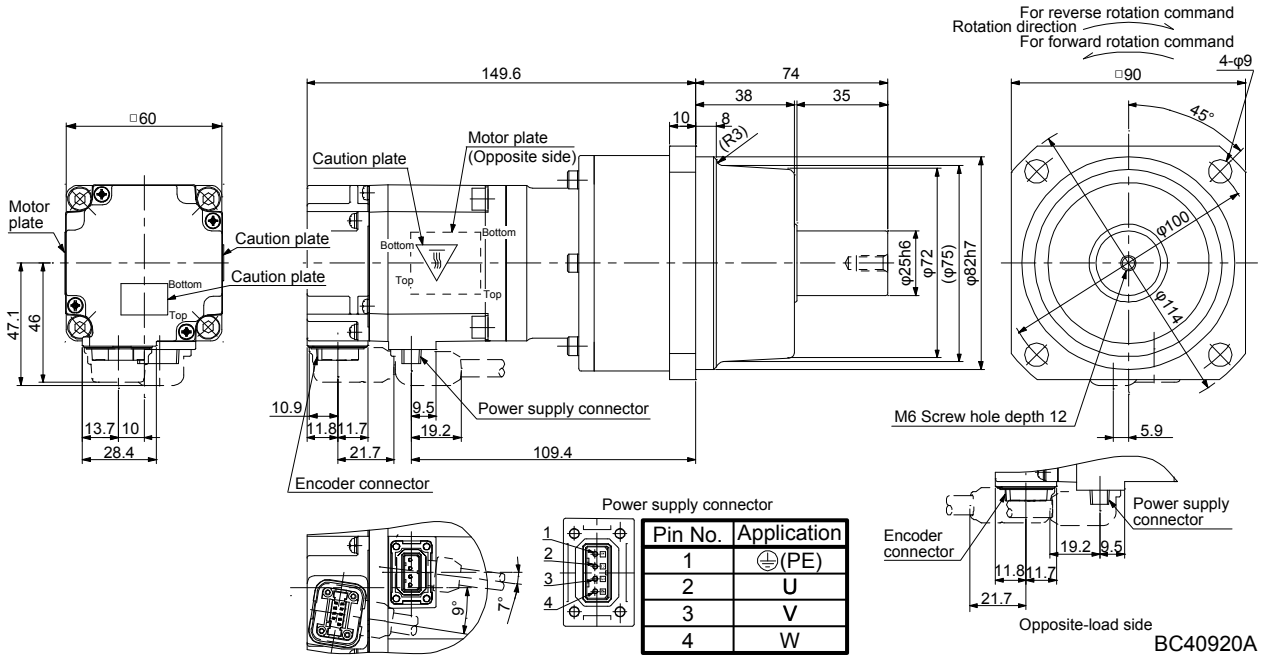

Pin No.	Application
1	⏚(PE)
2	U
3	V
4	W

BC40920A

Model	Output [W]	Reducer model	Reduction ratio (actual reduction ratio)	Moment of inertia J [× 10^{-4} kg•m^2]	Mass [kg]
HG-KR43G1	400	K9005	1/5 (19/96)	0.525	3.7

[Unit: mm]

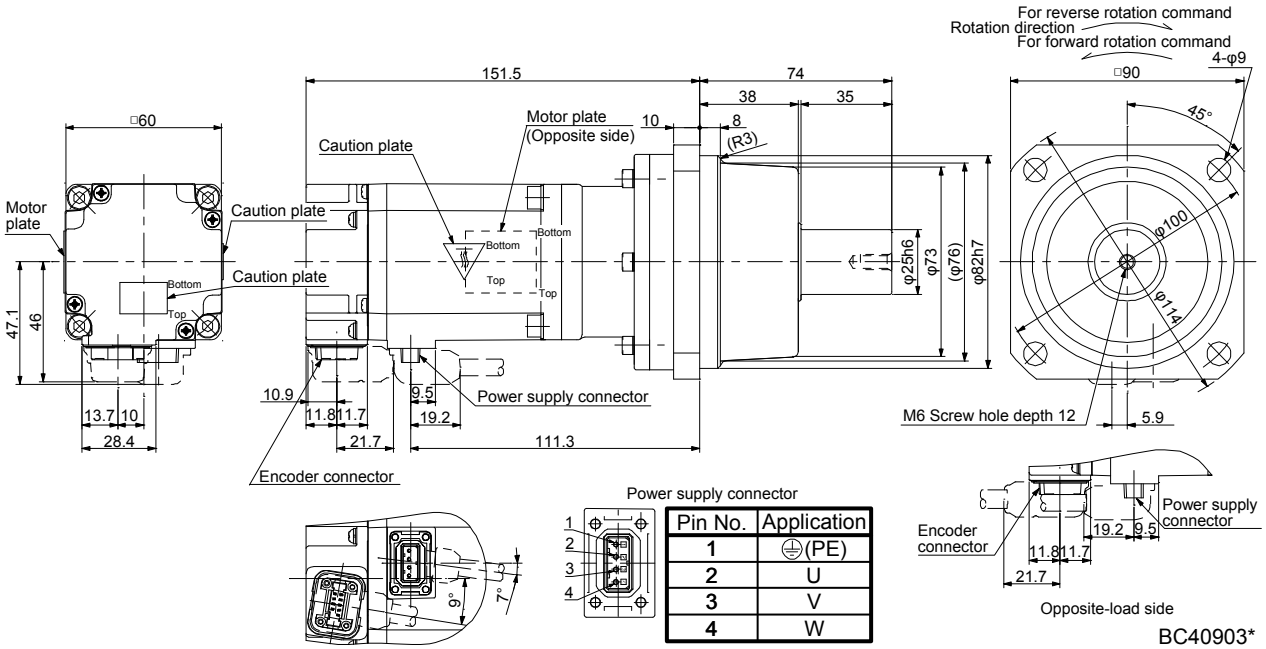

Pin No.	Application
1	⏚(PE)
2	U
3	V
4	W

BC40903*

Model	Output [W]	Reducer model	Reduction ratio (actual reduction ratio)	Moment of inertia J [× 10^{-4} kg•m^2]	Mass [kg]
HG-KR43G1	400	K9012	1/12 (961/11664)	0.568	4.3

[Unit: mm]

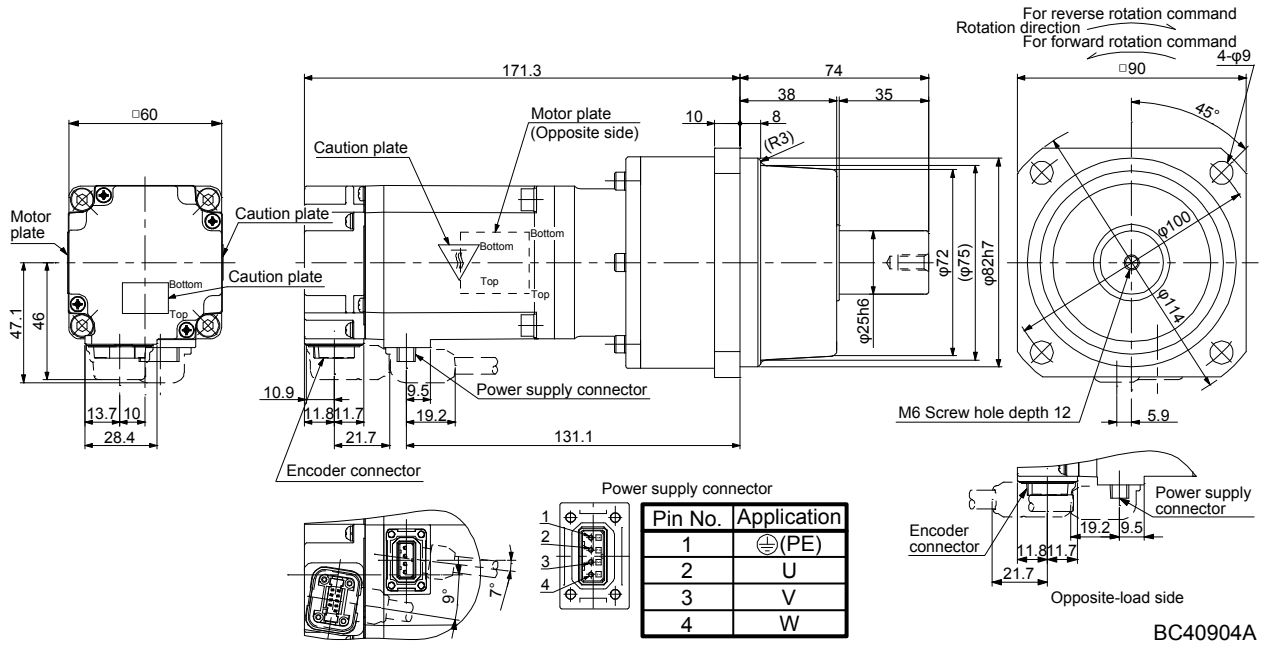

Model	Output [W]	Reducer model	Reduction ratio (actual reduction ratio)	Moment of inertia J [× 10^{-4} kg•m^2]	Mass [kg]
HG-KR43G1	400	K10020	1/20 (7/135)	0.881	5.4

[Unit: mm]

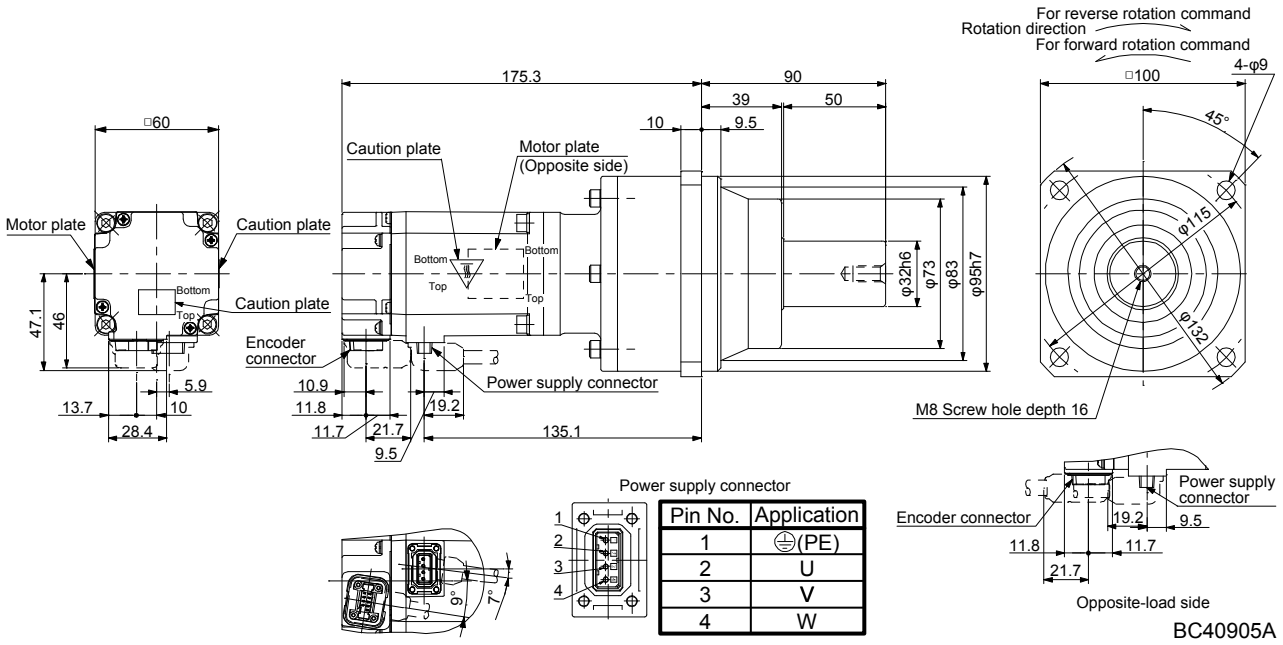

Model	Output [W]	Reducer model	Reduction ratio (actual reduction ratio)	Moment of inertia J [× 10^{-4} kg•m^2]	Mass [kg]
HG-KR73G1	750	K10005	1/5 (1/5)	1.68	6.0

[Unit: mm]

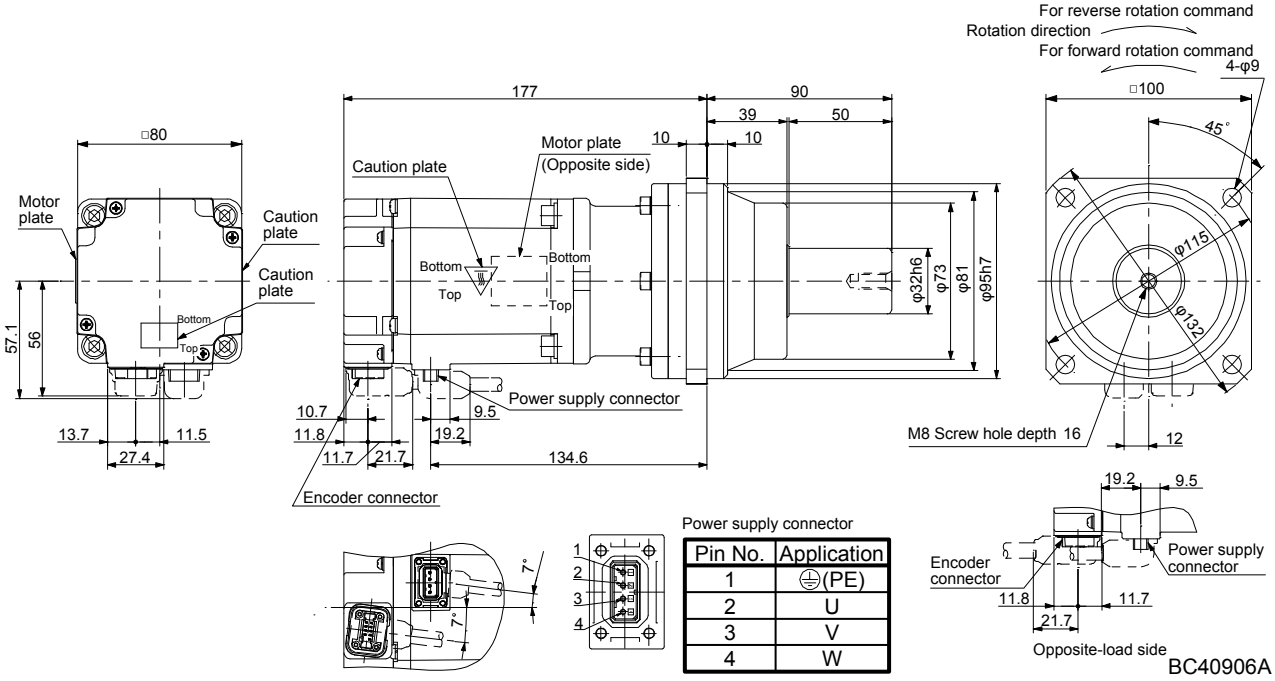

Power supply connector

Pin No.	Application
1	⏚(PE)
2	U
3	V
4	W

BC40906A

Model	Output [W]	Reducer model	Reduction ratio (actual reduction ratio)	Moment of inertia J [× 10^{-4} kg•m^2]	Mass [kg]
HG-KR73G1	750	K10012	1/12 (7/87)	2.35	7.1

[Unit: mm]

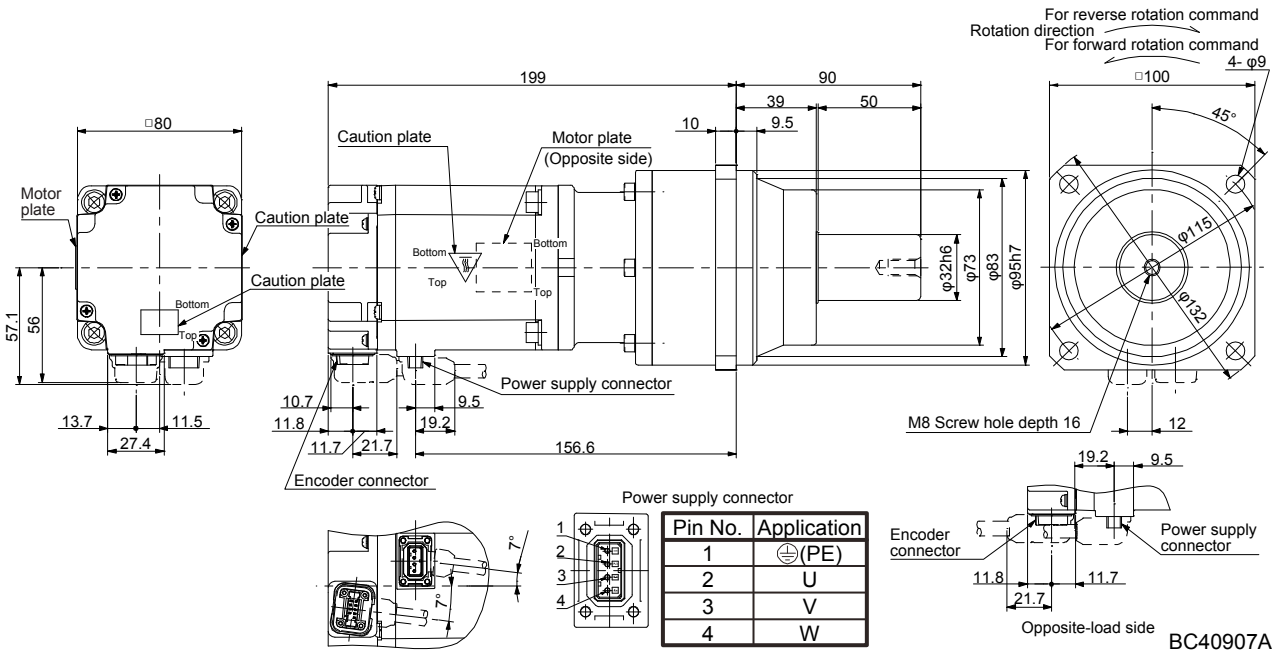

Power supply connector

Pin No.	Application
1	⏚(PE)
2	U
3	V
4	W

BC40907A

Model	Output [W]	Reducer model	Reduction ratio (actual reduction ratio)	Moment of inertia J [× 10^{-4} kg•m^2]	Mass [kg]
HG-KR73G1	750	K12020	1/20 (625/12544)	2.41	10

[Unit: mm]

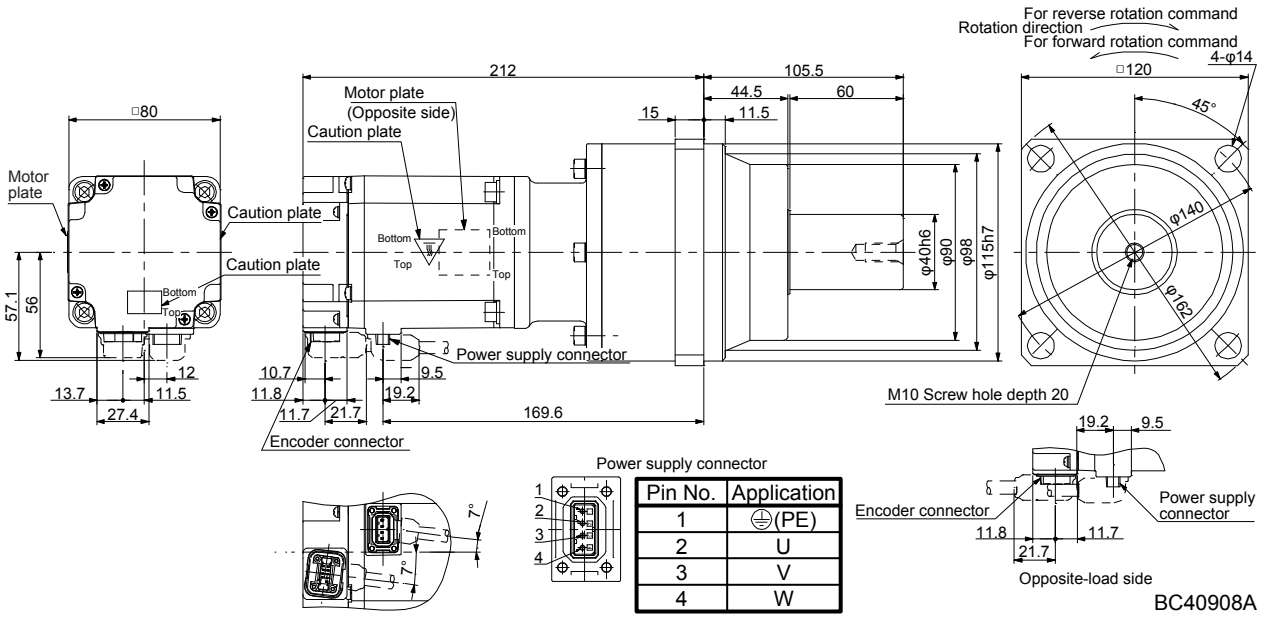

Pin No.	Application
1	⏚(PE)
2	U
3	V
4	W

6.8.4 For general industrial machine with a reducer (with an electromagnetic brake)

Model	Output [W]	Reducer model	Reduction ratio (actual reduction ratio)	Brake static friction torque [N•m]	Moment of inertia J [× 10^{-4} kg•m^2]	Mass [kg]
HG-KR053BG1	50	K6505	1/5 (9/44)	0.32	0.0840	1.6

[Unit: mm]

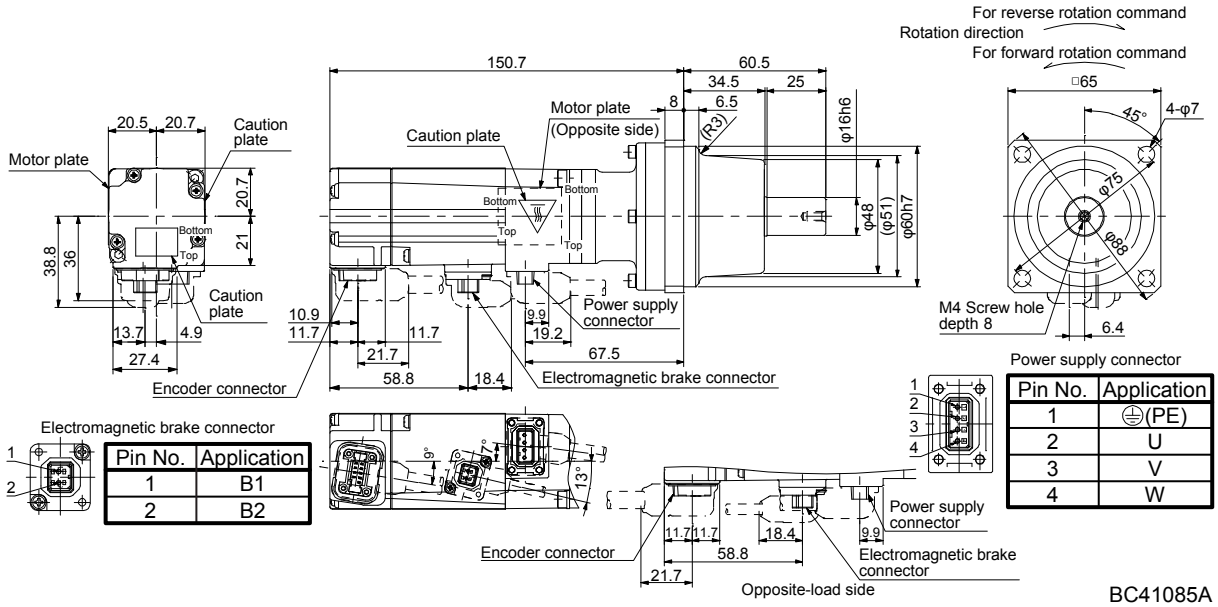

Pin No.	Application
1	⏚(PE)
2	U
3	V
4	W

Pin No.	Application
1	B1
2	B2

Model	Output [W]	Reducer model	Reduction ratio (actual reduction ratio)	Brake static friction torque [N•m]	Moment of inertia J [× 10^{-4} kg•m^2]	Mass [kg]
HG-KR053BG1	50	K6512	1/12 (49/576)	0.32	0.106	2.0
HG-KR053BG1	50	K6520	1/20 (25/484)	0.32	0.0880	2.0

[Unit: mm]

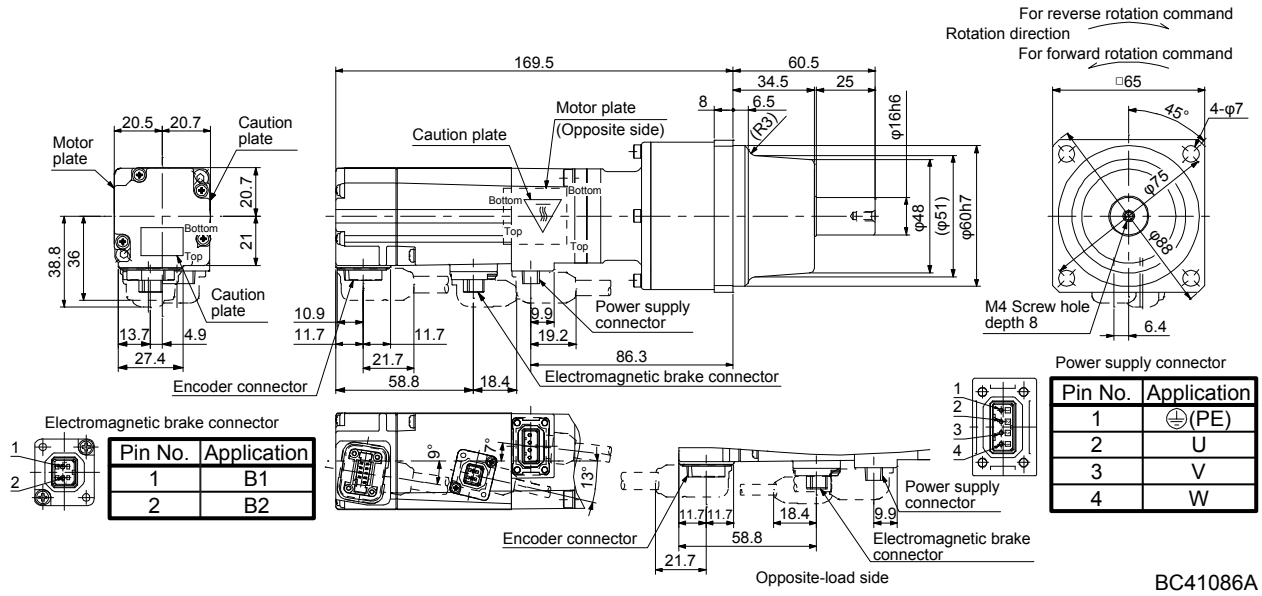

BC41086A

Model	Output [W]	Reducer model	Reduction ratio (actual reduction ratio)	Brake static friction torque [N•m]	Moment of inertia J [× 10^{-4} kg•m^2]	Mass [kg]
HG-KR13BG1	100	K6505	1/5 (9/44)	0.32	0.121	1.8

[Unit: mm]

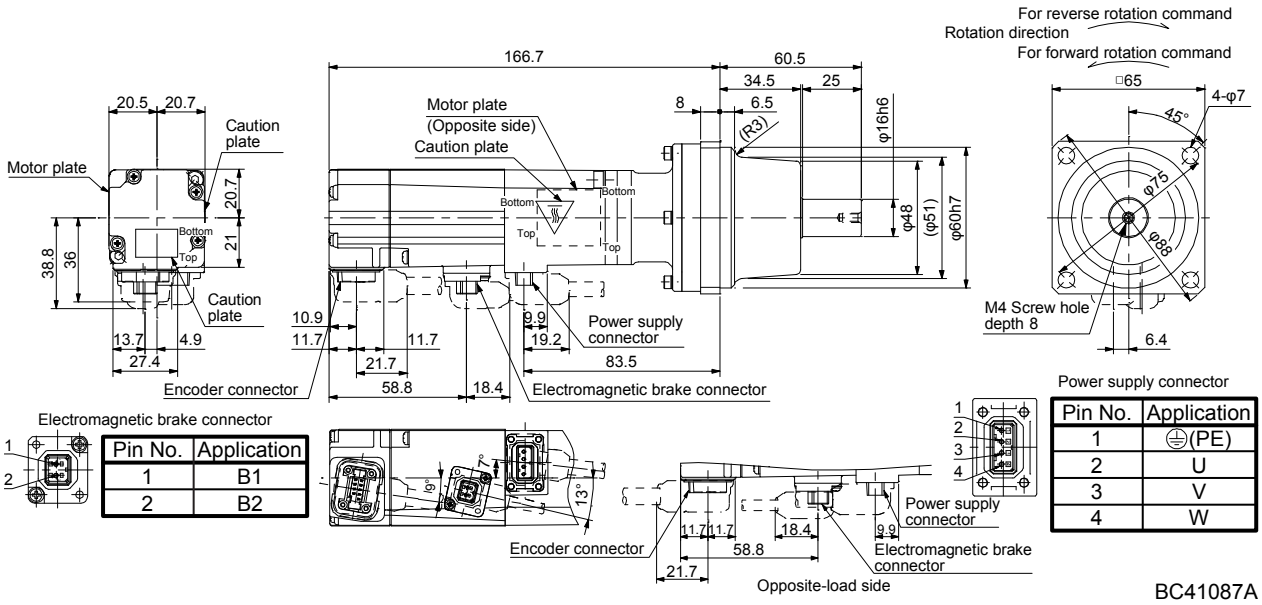

BC41087A

Model	Output [W]	Reducer model	Reduction ratio (actual reduction ratio)	Brake static friction torque [N•m]	Moment of inertia J [× 10^{-4} kg•m^2]	Mass [kg]
HG-KR13BG1	100	K6512	1/12 (49/576)	0.32	0.143	2.2
HG-KR13BG1	100	K6520	1/20 (25/484)	0.32	0.125	2.2

[Unit: mm]

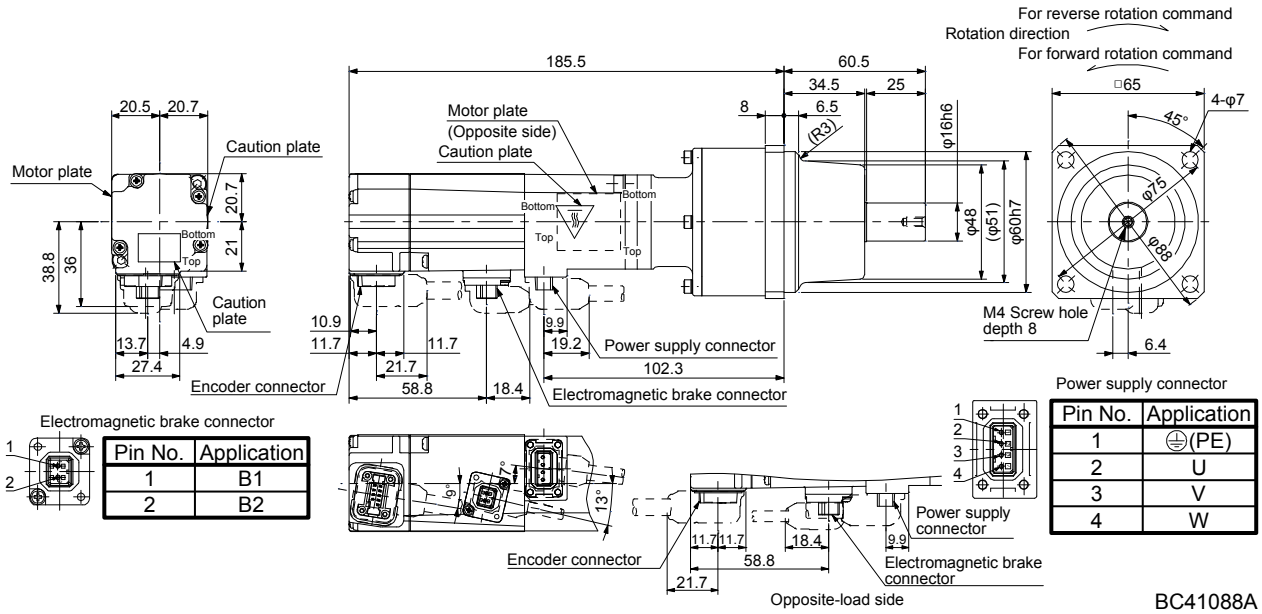

BC41088A

Model	Output [W]	Reducer model	Reduction ratio (actual reduction ratio)	Brake static friction torque [N•m]	Moment of inertia J [× 10^{-4} kg•m^2]	Mass [kg]
HG-KR23BG1	200	K9005	1/5 (19/96)	1.3	0.397	3.7

[Unit: mm]

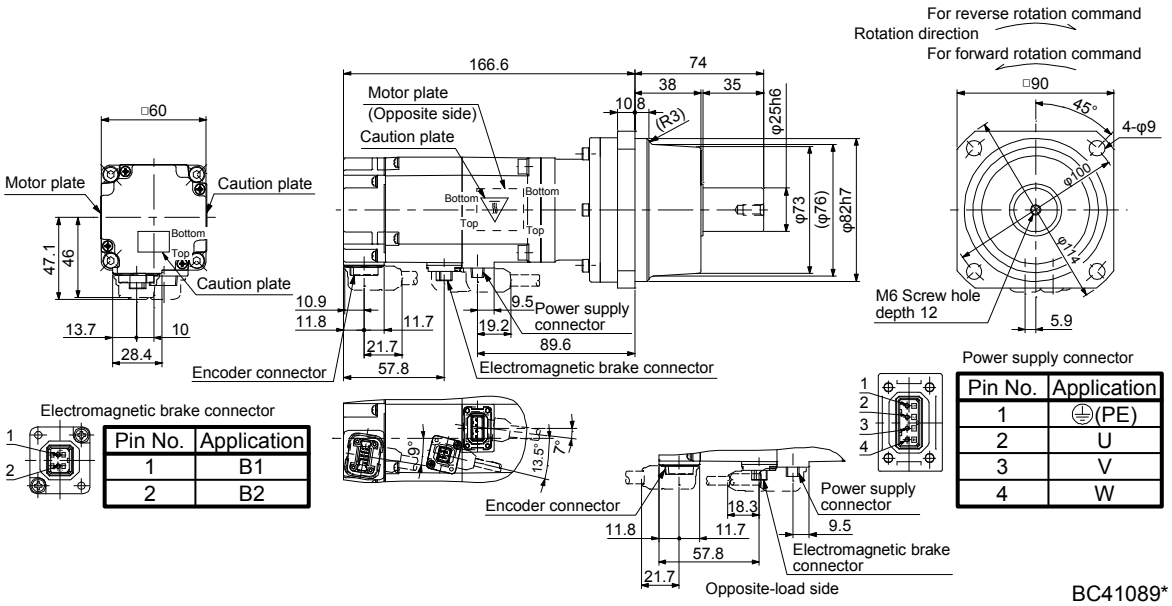

BC41089*

Model	Output [W]	Reducer model	Reduction ratio (actual reduction ratio)	Brake static friction torque [N•m]	Moment of inertia J [× 10^{-4} kg•m^2]	Mass [kg]
HG-KR23BG1	200	K9012	1/12 (961/11664)	1.3	0.440	4.3
HG-KR23BG1	200	K9020	1/20 (513/9984)	1.3	0.413	4.3

[Unit: mm]

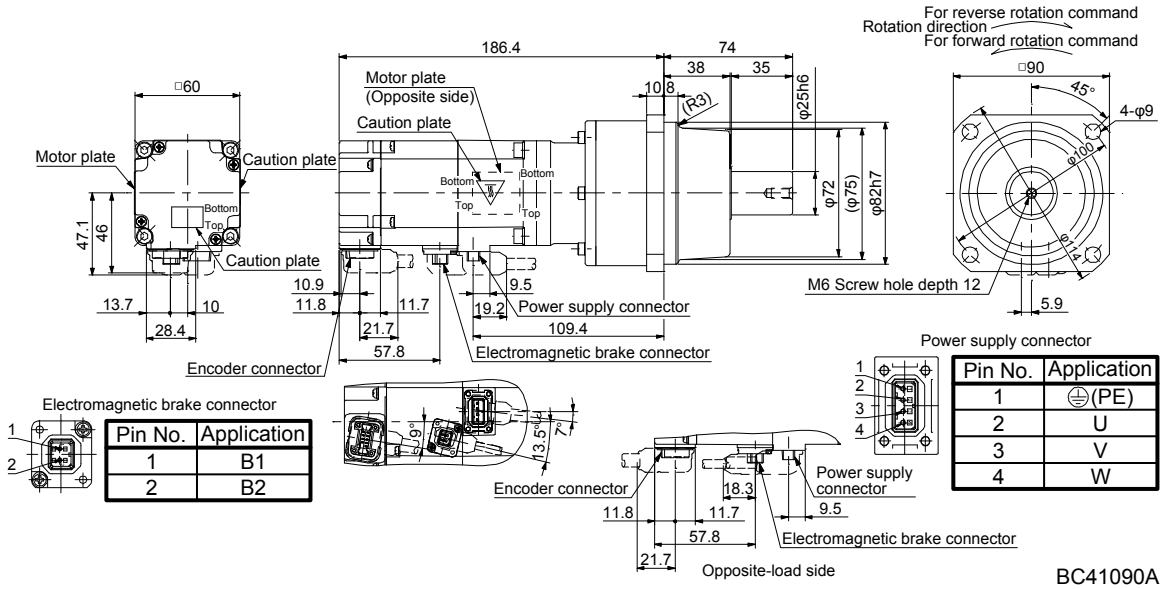

Pin No.	Application
1	B1
2	B2

Pin No.	Application
1	⏚(PE)
2	U
3	V
4	W

BC41090A

Model	Output [W]	Reducer model	Reduction ratio (actual reduction ratio)	Brake static friction torque [N•m]	Moment of inertia J [× 10^{-4} kg•m^2]	Mass [kg]
HG-KR43BG1	400	K9005	1/5 (19/96)	1.3	0.547	4.1

[Unit: mm]

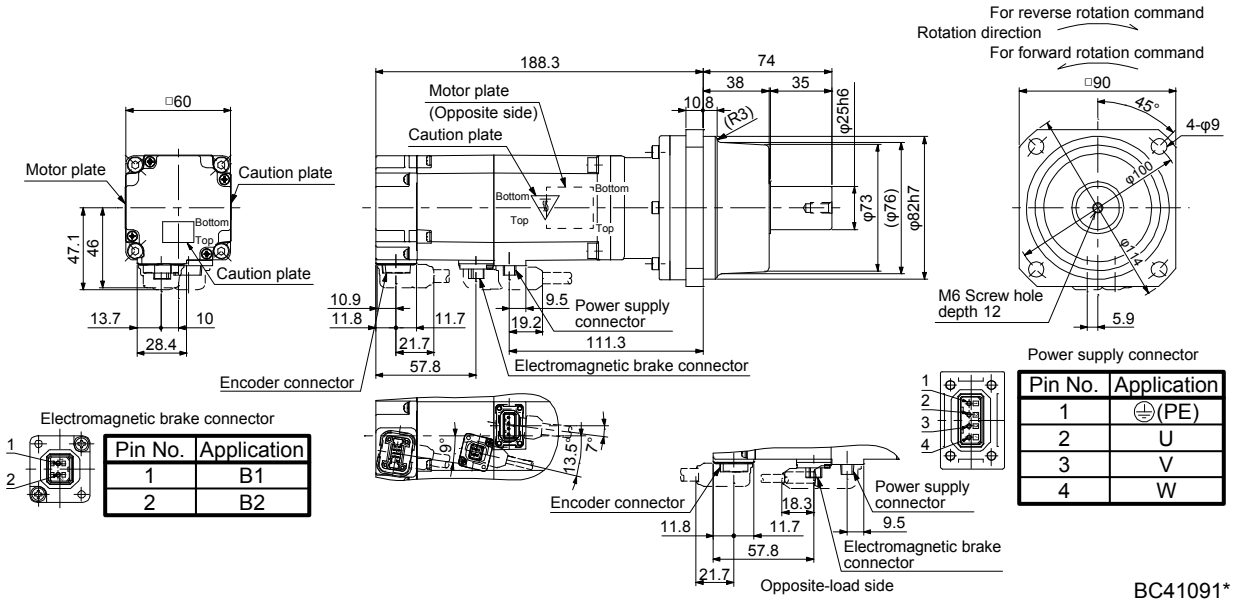

Pin No.	Application
1	B1
2	B2

Pin No.	Application
1	⏚(PE)
2	U
3	V
4	W

BC41091*

Model	Output [W]	Reducer model	Reduction ratio (actual reduction ratio)	Brake static friction torque [N•m]	Moment of inertia J [× 10^{-4} kg•m^2]	Mass [kg]
HG-KR43BG1	400	K9012	1/12 (961/11664)	1.3	0.590	4.7

[Unit: mm]

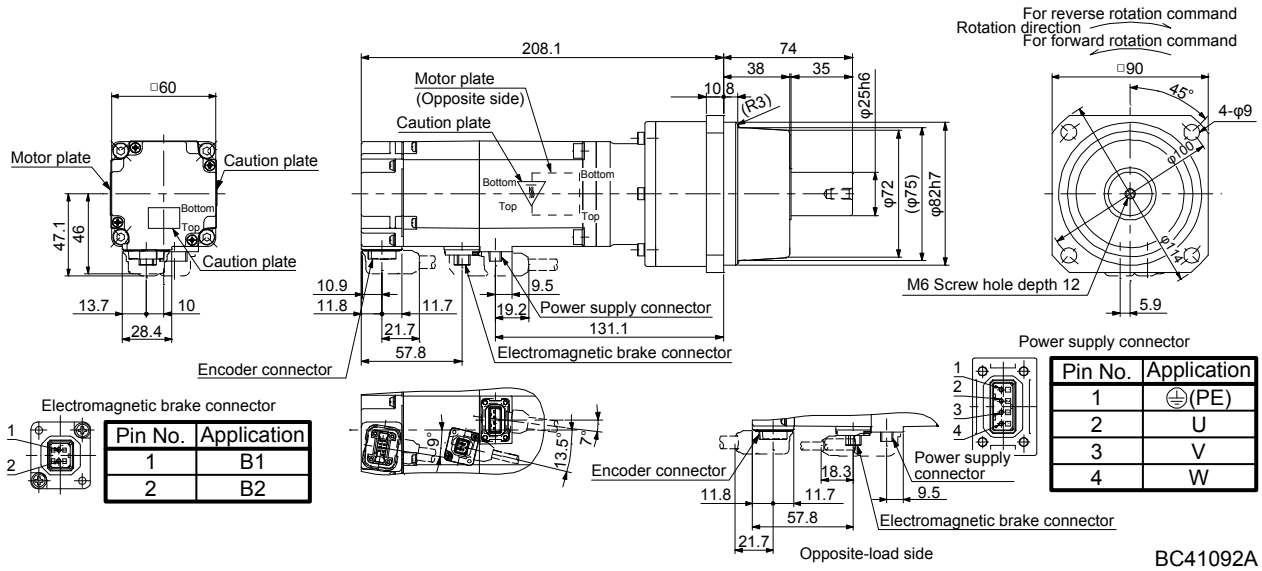

BC41092A

Model	Output [W]	Reducer model	Reduction ratio (actual reduction ratio)	Brake static friction torque [N•m]	Moment of inertia J [× 10^{-4} kg•m^2]	Mass [kg]
HG-KR43BG1	400	K10020	1/20 (7/135)	1.3	0.903	5.8

[Unit: mm]

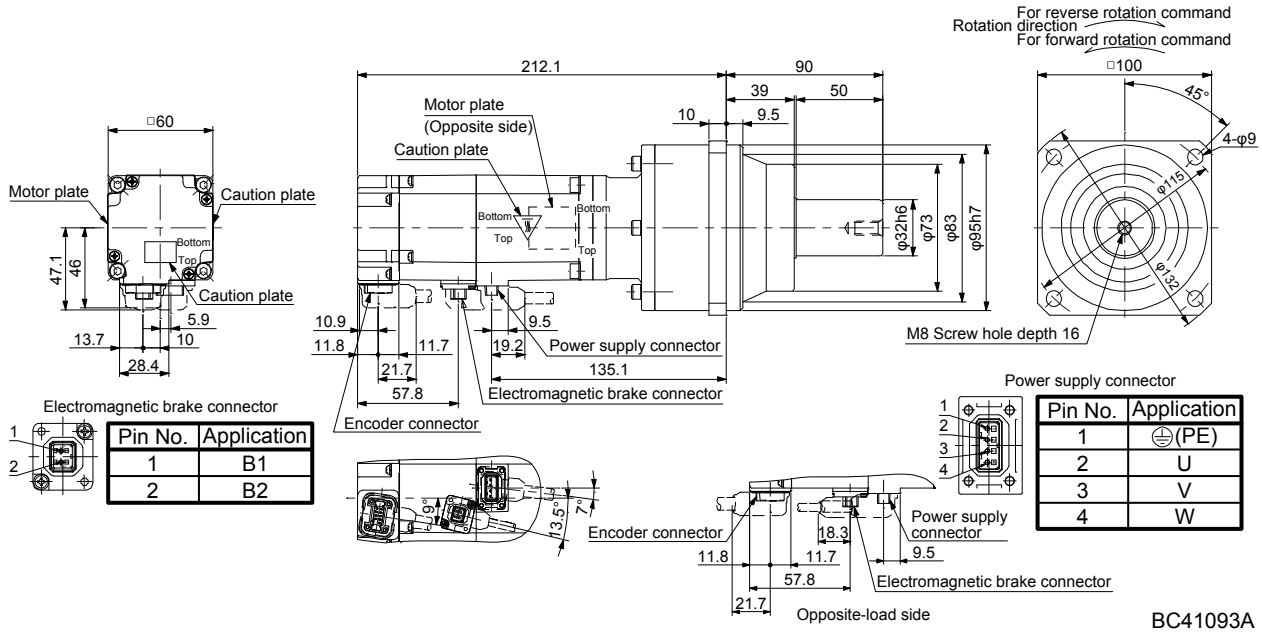

BC41093A

Model	Output [W]	Reducer model	Reduction ratio (actual reduction ratio)	Brake static friction torque [N•m]	Moment of inertia J [× 10^{-4} kg•m^2]	Mass [kg]
HG-KR73BG1	750	K10005	1/5 (1/5)	2.4	1.79	7.0

[Unit: mm]

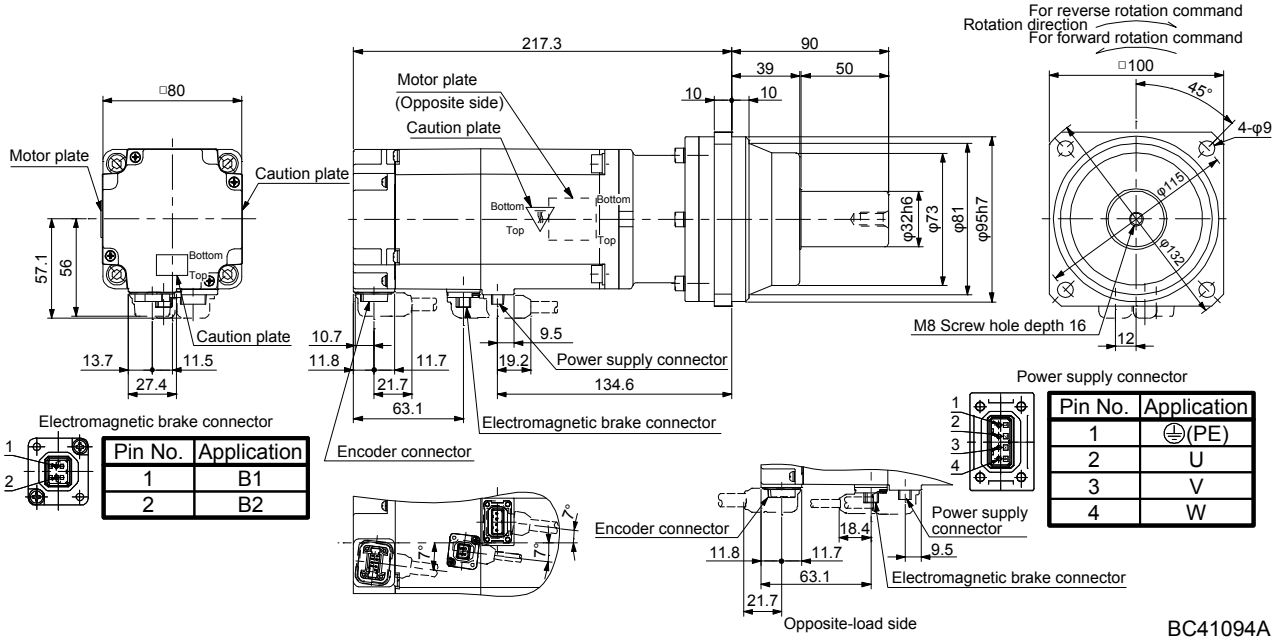

Model	Output [W]	Reducer model	Reduction ratio (actual reduction ratio)	Brake static friction torque [N•m]	Moment of inertia J [× 10^{-4} kg•m^2]	Mass [kg]
HG-KR73BG1	750	K10012	1/12 (7/87)	2.4	2.46	8.1

[Unit: mm]

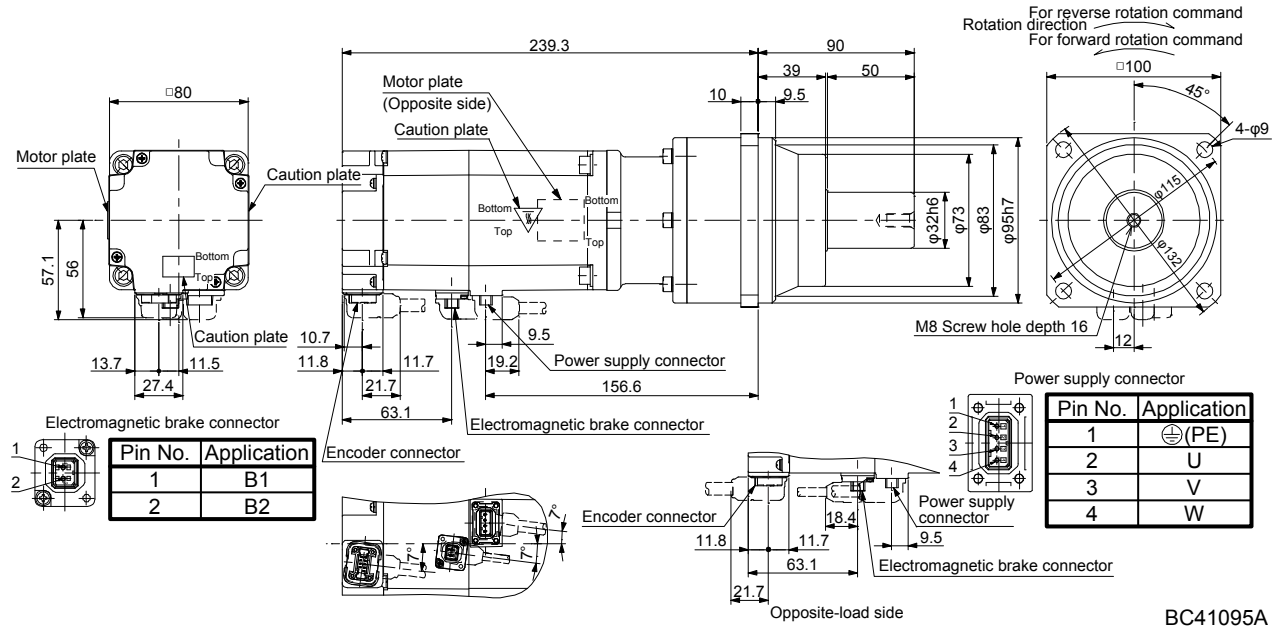

Model	Output [W]	Reducer model	Reduction ratio (actual reduction ratio)	Brake static friction torque [N•m]	Moment of inertia J [× 10^{-4} kg•m^2]	Mass [kg]
HG-KR73BG1	750	K12020	1/20 (625/12544)	2.4	2.52	11

[Unit: mm]

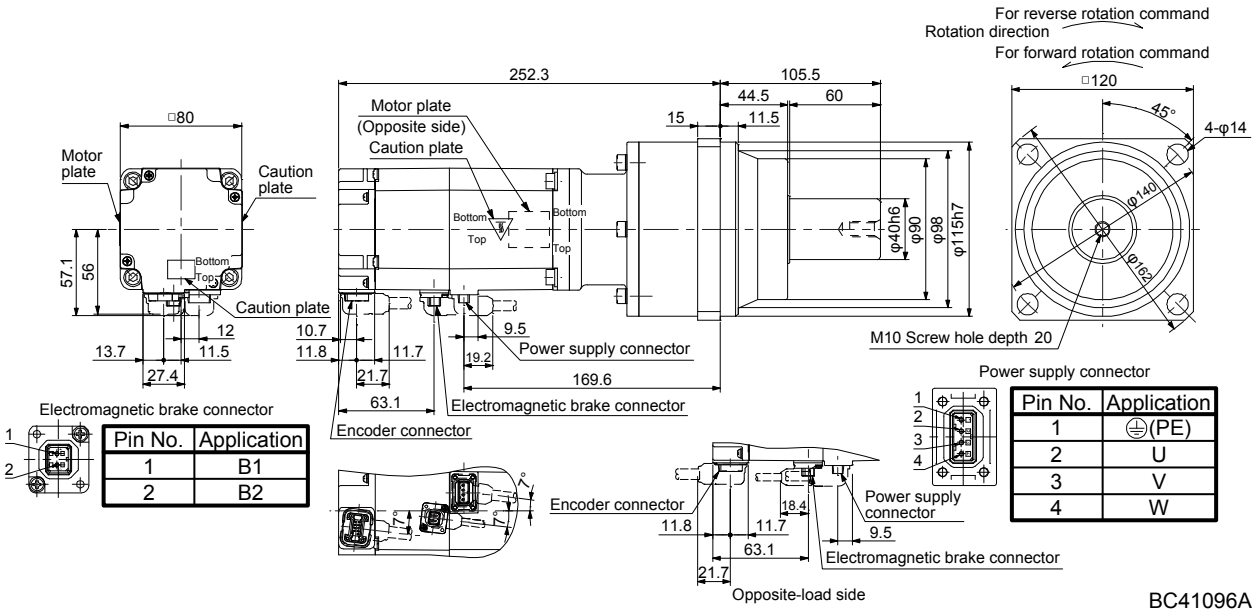

6.8.5 With flange-output type reducer for high precision applications, flange mounting (without an electromagnetic brake)

Model	Output [W]	Reducer model	Reduction ratio	Moment of inertia J [× 10^{-4} kg•m^2]	Mass [kg]
HG-KR053G5	50	HPG-11B-05-F0ADG-S	1/5	0.0485	0.55
HG-KR053G5	50	HPG-11B-09-F0ADG-S	1/9	0.0475	0.56

[Unit: mm]

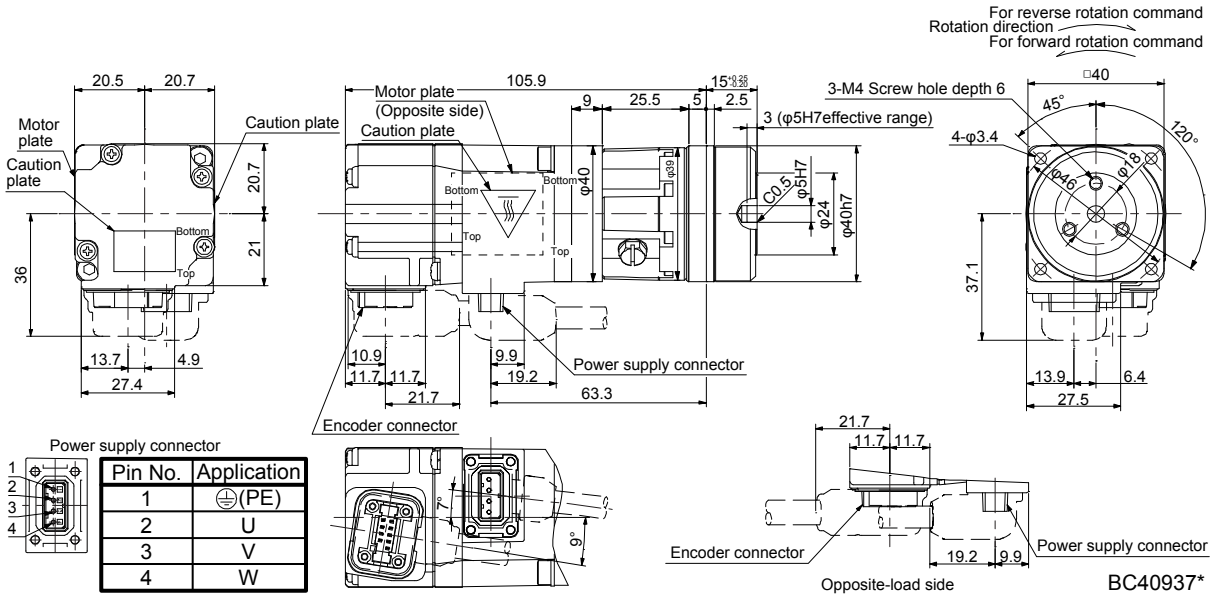

Model	Output [W]	Reducer model	Reduction ratio	Moment of inertia J [× 10^{-4} kg•m^2]	Mass [kg]
HG-KR053G5	50	HPG-14A-05-F0CBJS-S	1/5	0.113	1.1
HG-KR053G5	50	HPG-14A-11-F0CBKS-S	1/11	0.105	1.2
HG-KR053G5	50	HPG-14A-21-F0CBKS-S	1/21	0.0960	1.2
HG-KR053G5	50	HPG-14A-33-F0CBLS-S	1/33	0.0900	1.2
HG-KR053G5	50	HPG-14A-45-F0CBLS-S	1/45	0.0900	1.2

[Unit: mm]

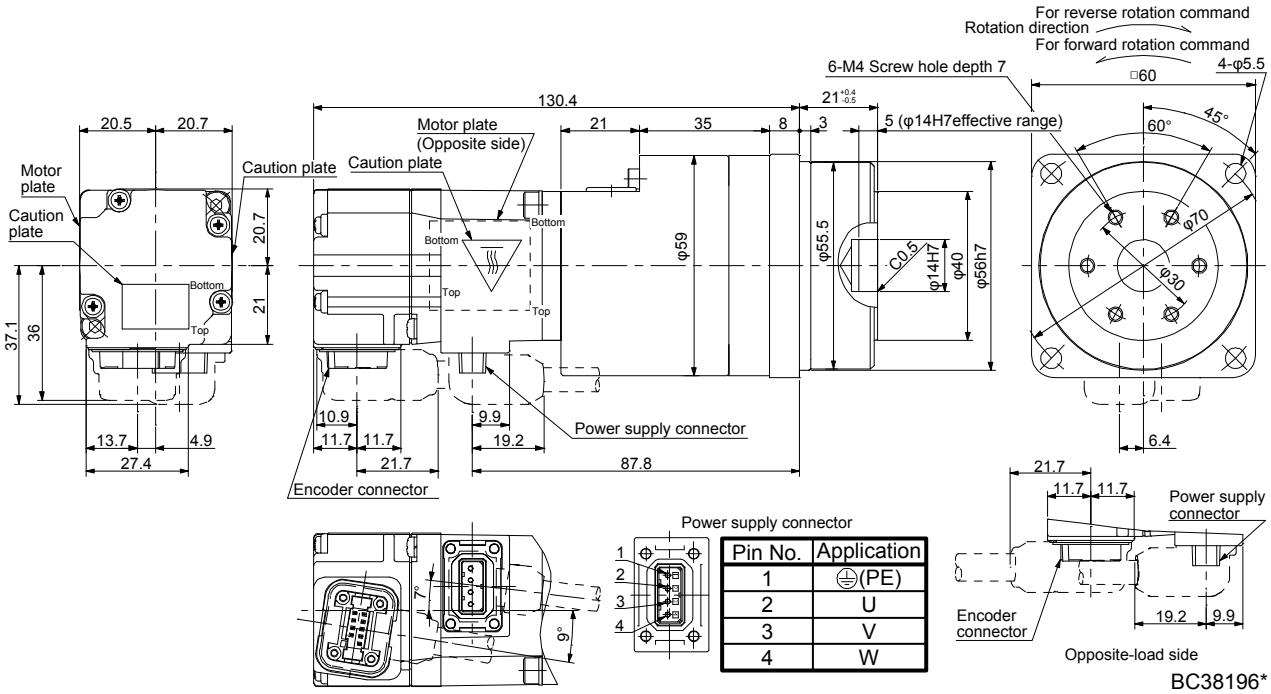

Model	Output [W]	Reducer model	Reduction ratio	Moment of inertia J [× 10^{-4} kg•m^2]	Mass [kg]
HG-KR13G5	100	HPG-11B-05-F0ADG-S	1/5	0.0812	0.75

[Unit: mm]

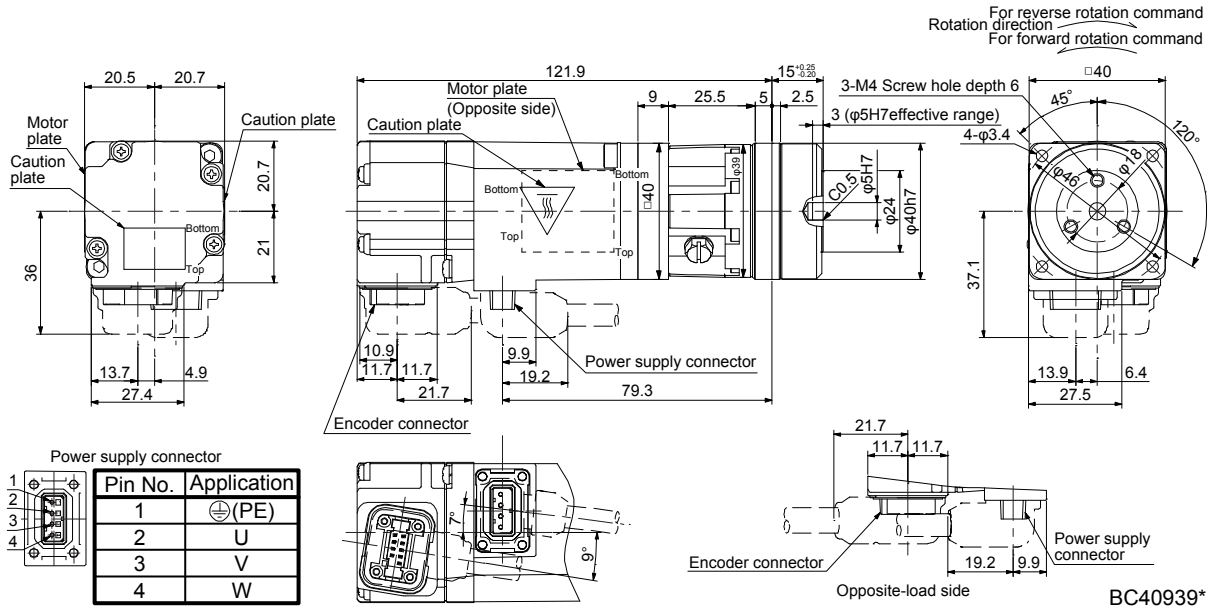

Model	Output [W]	Reducer model	Reduction ratio	Moment of inertia J [× 10^{-4} kg•m^2]	Mass [kg]
HG-KR13G5	100	HPG-14A-05-F0CBJS-S	1/5	0.146	1.3
HG-KR13G5	100	HPG-14A-11-F0CBKS-S	1/11	0.138	1.4
HG-KR13G5	100	HPG-14A-21-F0CBKS-S	1/21	0.129	1.4

[Unit: mm]

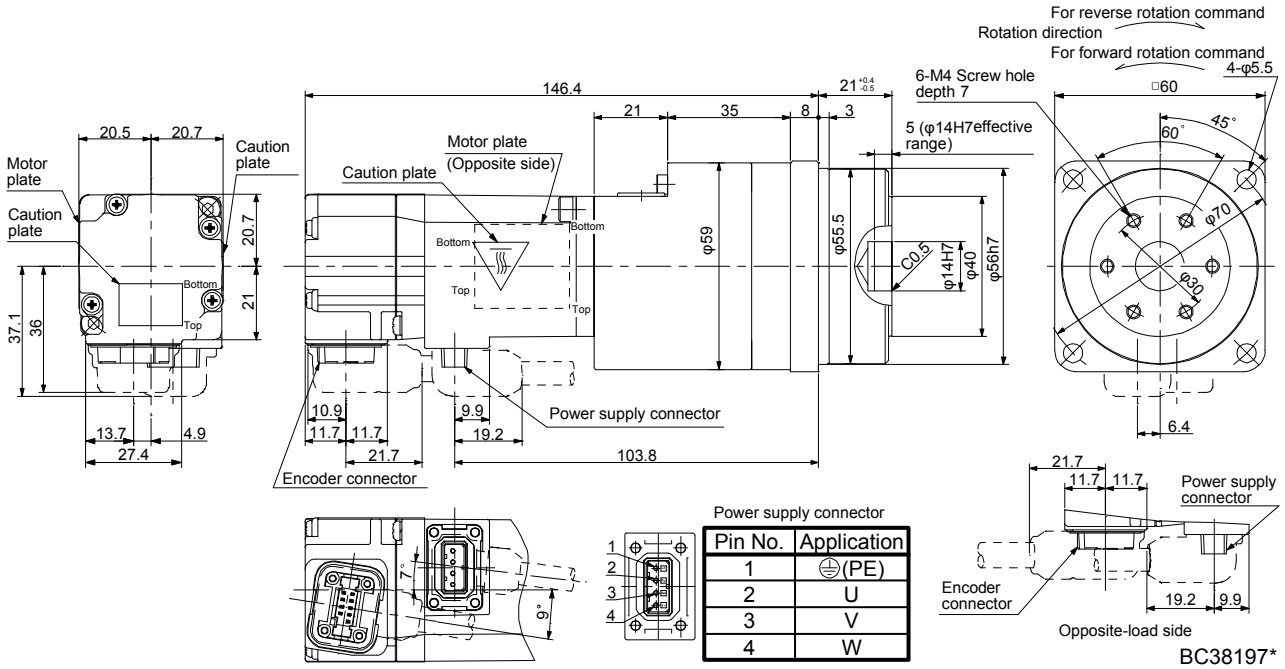

Power supply connector

Pin No.	Application
1	⏚(PE)
2	U
3	V
4	W

BC38197*

Model	Output [W]	Reducer model	Reduction ratio	Moment of inertia J [× 10^{-4} kg•m^2]	Mass [kg]
HG-KR13G5	100	HPG-20A-33-F0JMLAS-S	1/33	0.140	2.6
HG-KR13G5	100	HPG-20A-45-F0JMLAS-S	1/45	0.139	2.6

[Unit: mm]

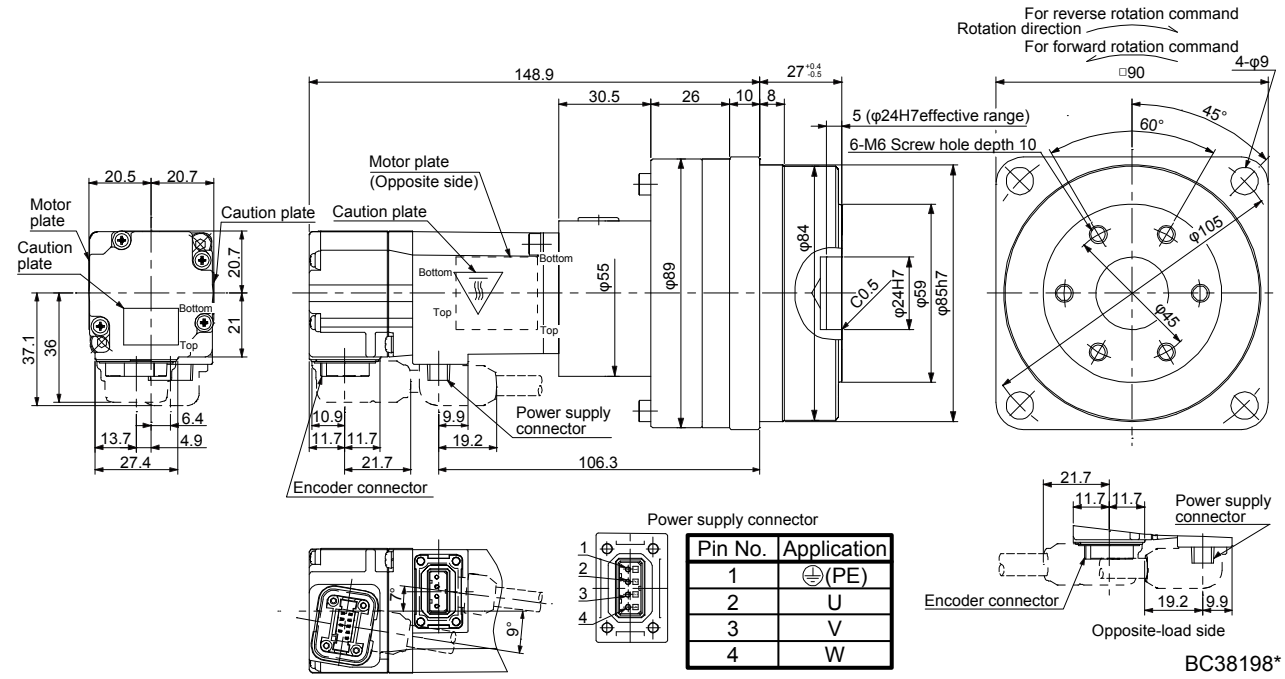

Power supply connector

Pin No.	Application
1	⏚(PE)
2	U
3	V
4	W

BC38198*

Model	Output [W]	Reducer model	Reduction ratio	Moment of inertia J [× 10^{-4} kg•m^2]	Mass [kg]
HG-KR23G5	200	HPG-14A-05-F0AZW-S	1/5	0.422	1.8
HG-KR23G5	200	HPG-14A-11-F0AZX-S	1/11	0.424	1.9

[Unit: mm]

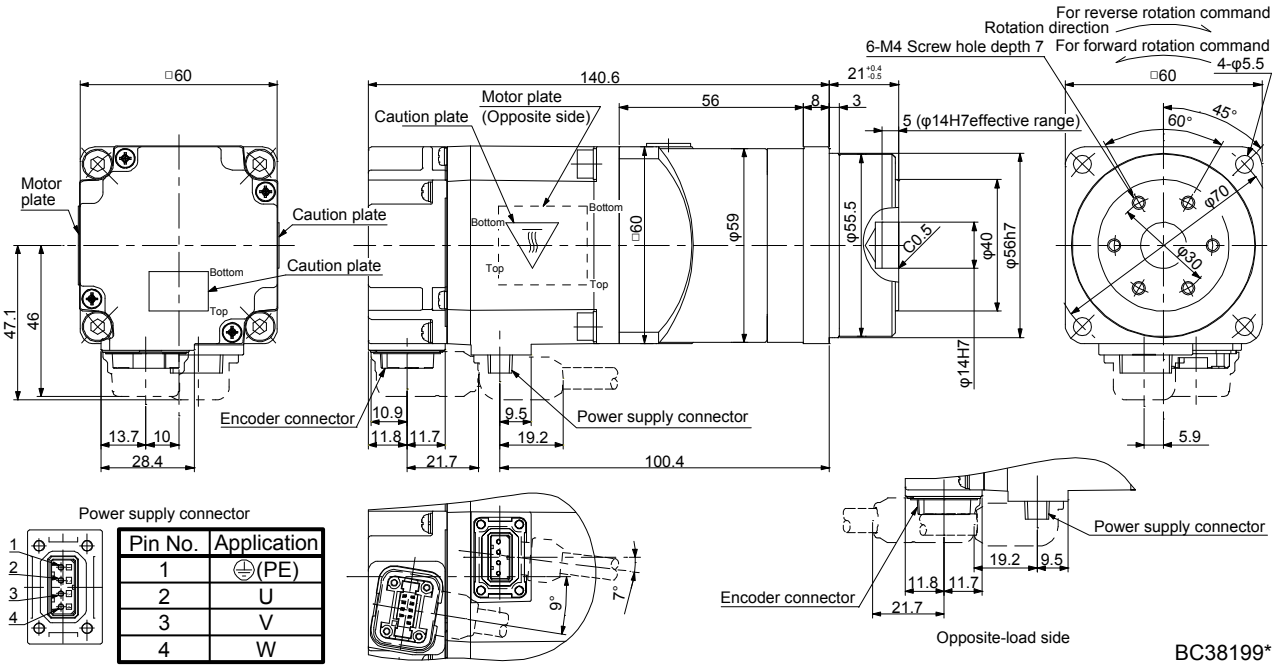

Model	Output [W]	Reducer model	Reduction ratio	Moment of inertia J [× 10^{-4} kg•m^2]	Mass [kg]
HG-KR23G5	200	HPG-20A-21-F0EKS-S	1/21	0.719	3.4
HG-KR23G5	200	HPG-20A-33-F0ELS-S	1/33	0.673	3.4
HG-KR23G5	200	HPG-20A-45-F0ELS-S	1/45	0.672	3.4

[Unit: mm]

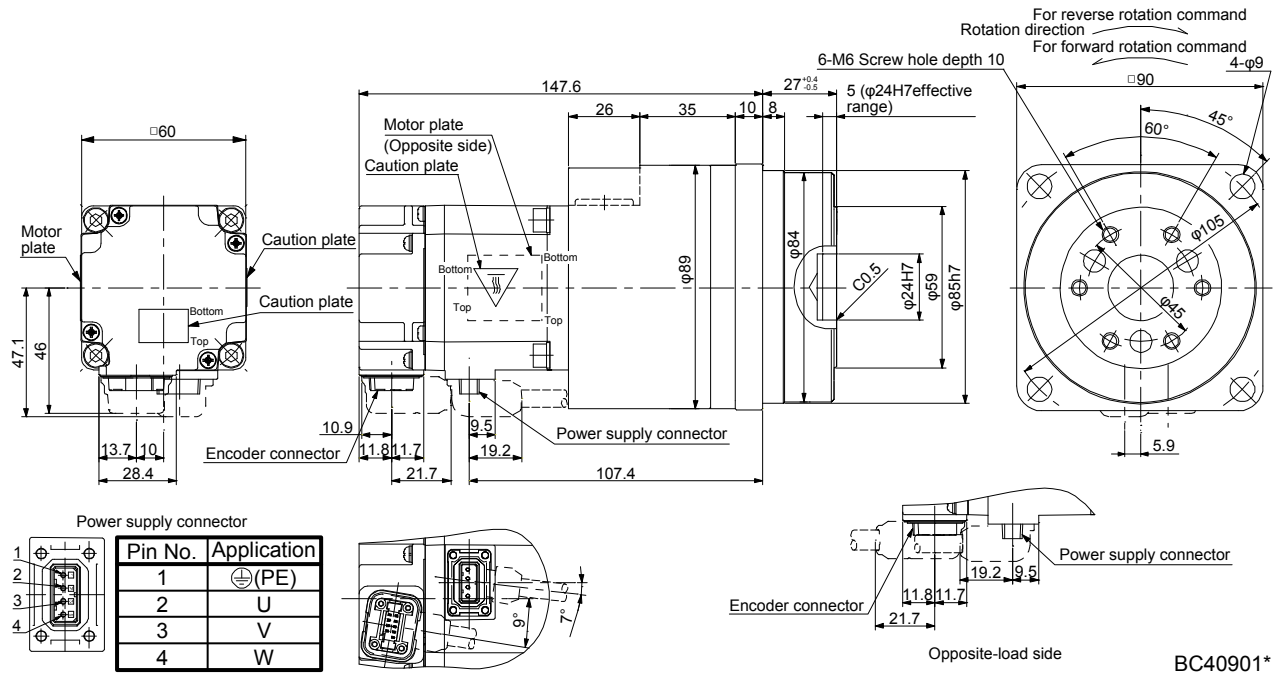

Model	Output [W]	Reducer model	Reduction ratio	Moment of inertia J [× 10^{-4} kg•m^2]	Mass [kg]
HG-KR43G5	400	HPG-14A-05-J2CBJS-S	1/5	0.572	2.3

[Unit: mm]

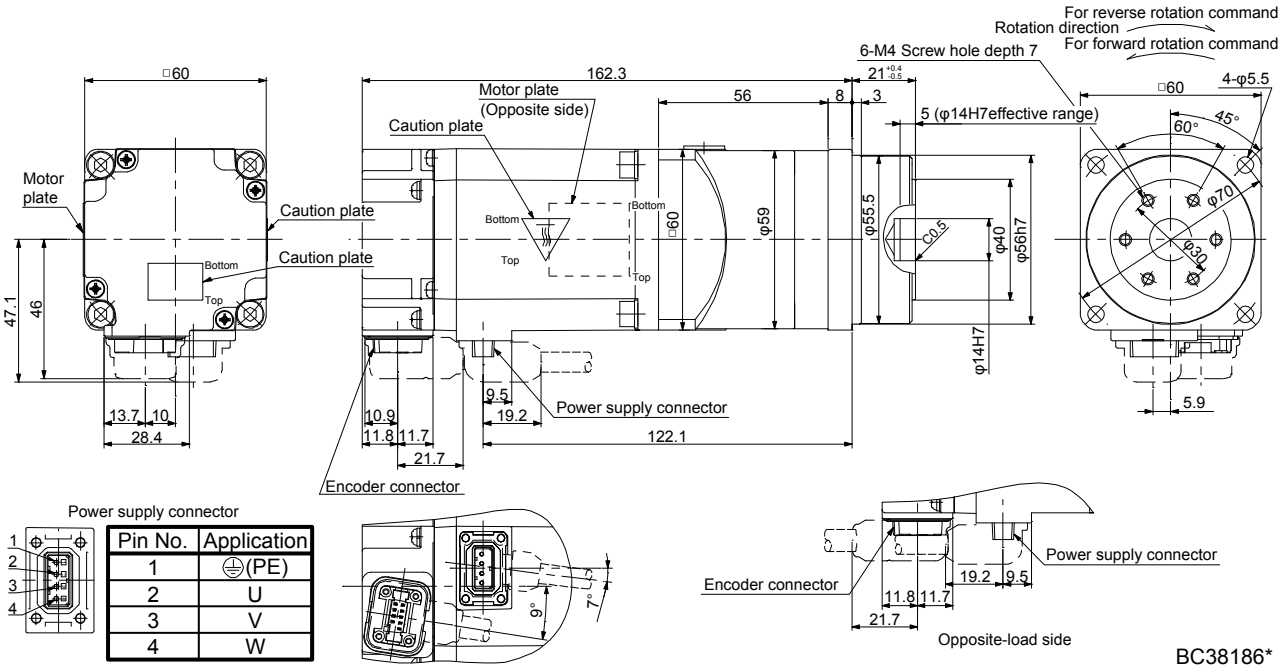

Pin No.	Application
1	⏚(PE)
2	U
3	V
4	W

Model	Output [W]	Reducer model	Reduction ratio	Moment of inertia J [× 10^{-4} kg•m^2]	Mass [kg]
HG-KR43G5	400	HPG-20A-11-F0EKS-S	1/11	0.947	3.9
HG-KR43G5	400	HPG-20A-21-F0EKS-S	1/21	0.869	3.9

[Unit: mm]

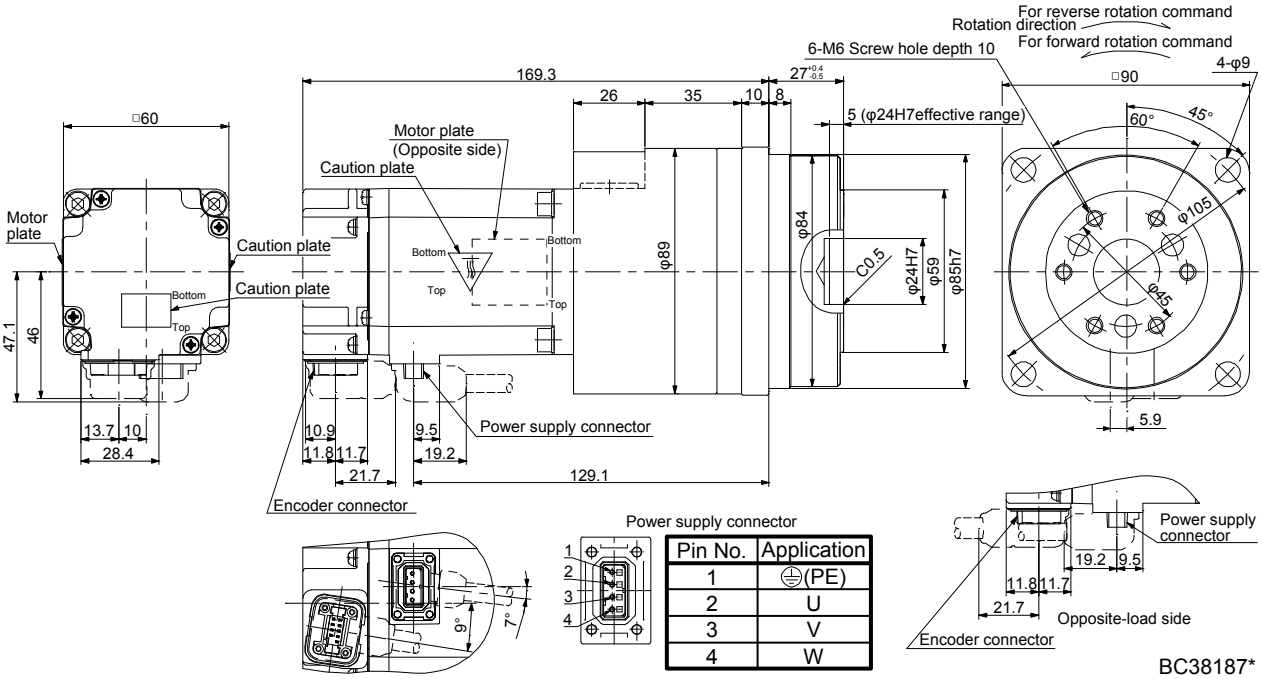

Pin No.	Application
1	⏚(PE)
2	U
3	V
4	W

Model	Output [W]	Reducer model	Reduction ratio	Moment of inertia J [× 10^{-4} kg•m^2]	Mass [kg]
HG-KR43G5	400	HPG-32A-33-F0RLAS-S	1/33	0.921	6.0
HG-KR43G5	400	HPG-32A-45-F0RLAS-S	1/45	0.915	6.0

[Unit: mm]

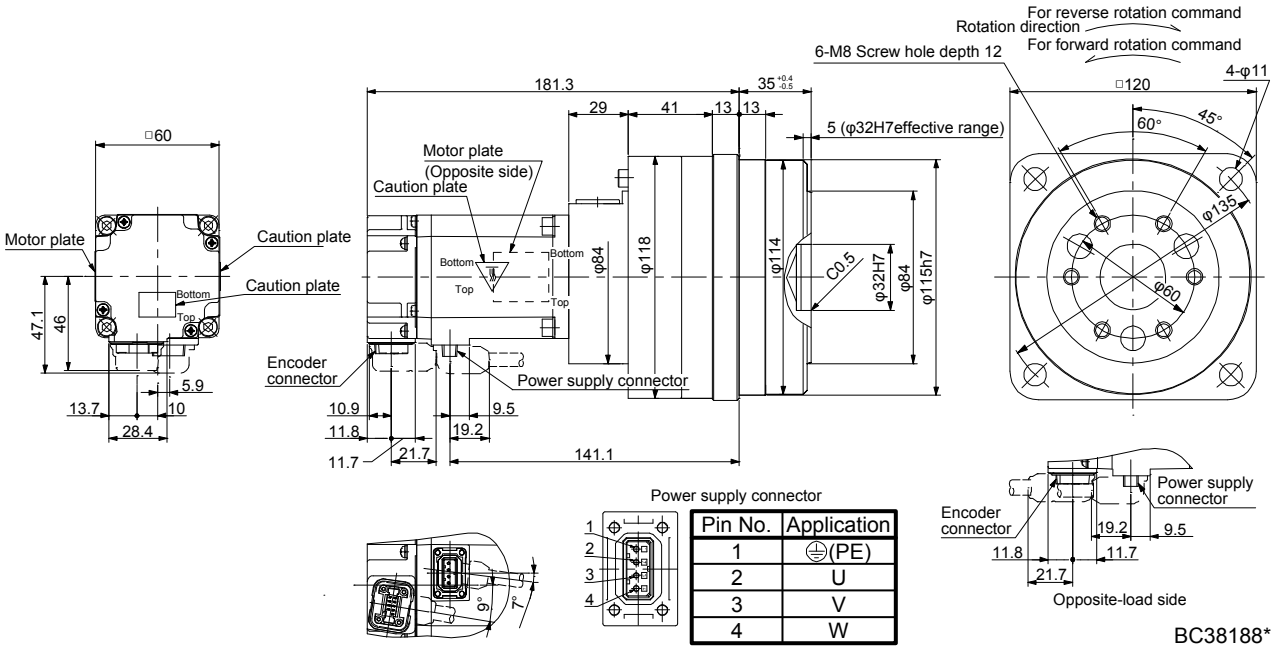

Pin No.	Application
1	⏚(PE)
2	U
3	V
4	W

BC38188*

Model	Output [W]	Reducer model	Reduction ratio	Moment of inertia J [× 10^{-4} kg•m^2]	Mass [kg]
HG-KR73G5	750	HPG-20A-05-F0FEOS-S	1/5	1.91	4.8
HG-KR73G5	750	HPG-20A-11-F0FEPS-S	1/11	1.82	5.1

[Unit: mm]

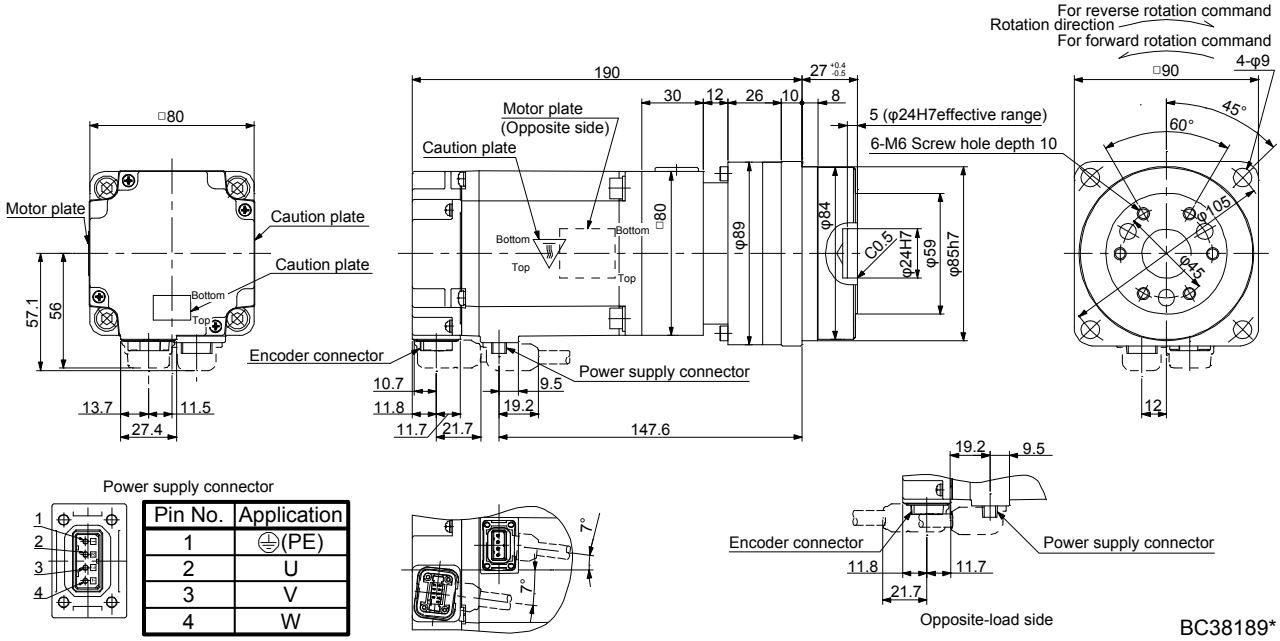

Pin No.	Application
1	⏚(PE)
2	U
3	V
4	W

BC38189*

Model	Output [W]	Reducer model	Reduction ratio	Moment of inertia J [× 10^{-4} kg•m^2]	Mass [kg]
HG-KR73G5	750	HPG-32A-21-F0SEIS-S	1/21	2.01	7.2
HG-KR73G5	750	HPG-32A-33-F0SEJS-S	1/33	1.79	7.2
HG-KR73G5	750	HPG-32A-45-F0SEJS-S	1/45	1.79	7.2

[Unit: mm]

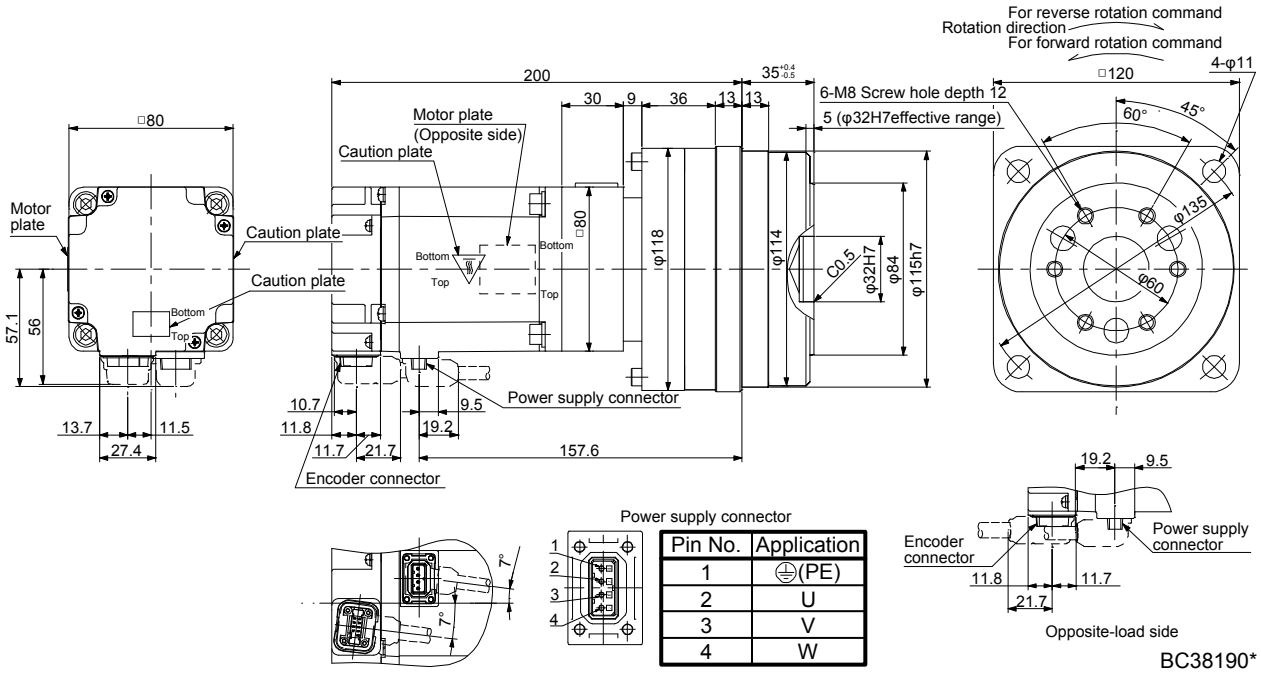

Pin No.	Application
1	⏚(PE)
2	U
3	V
4	W

BC38190*

6.8.6 With flange-output type reducer for high precision applications, flange mounting (with an electromagnetic brake)

Model	Output [W]	Reducer model	Reduction ratio	Brake static friction torque [N•m]	Moment of inertia J [× 10^{-4} kg•m^2]	Mass [kg]
HG-KR053BG5	50	HPG-11B-05-F0ADG-S	1/5	0.32	0.0507	0.75
HG-KR053BG5	50	HPG-11B-09-F0ADG-S	1/9	0.32	0.0497	0.76

[Unit: mm]

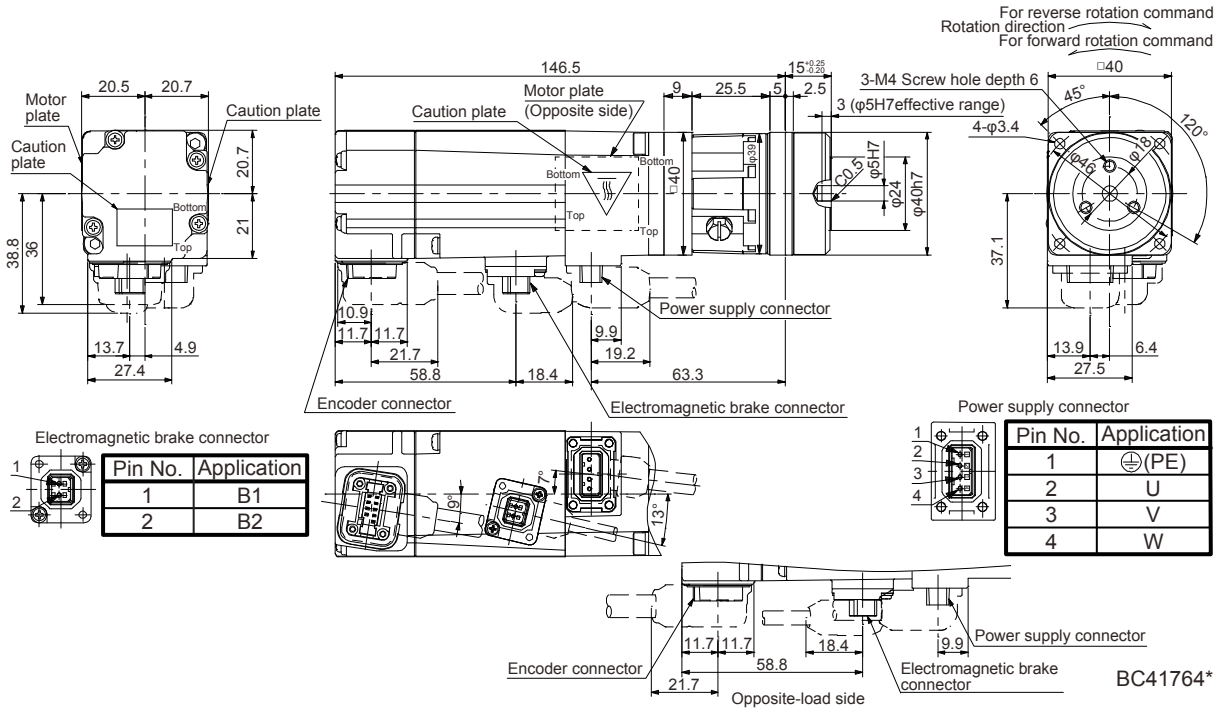

Pin No.	Application
1	B1
2	B2

Pin No.	Application
1	⏚(PE)
2	U
3	V
4	W

Model	Output [W]	Reducer model	Reduction ratio	Brake static friction torque [N•m]	Moment of inertia J [× 10^{-4} kg•m^2]	Mass [kg]
HG-KR053BG5	50	HPG-14A-05-F0CBJS-S	1/5	0.32	0.115	1.3
HG-KR053BG5	50	HPG-14A-11-F0CBKS-S	1/11	0.32	0.107	1.4
HG-KR053BG5	50	HPG-14A-21-F0CBKS-S	1/21	0.32	0.0980	1.4
HG-KR053BG5	50	HPG-14A-33-F0CBLS-S	1/33	0.32	0.0920	1.4
HG-KR053BG5	50	HPG-14A-45-F0CBLS-S	1/45	0.32	0.0920	1.4

[Unit: mm]

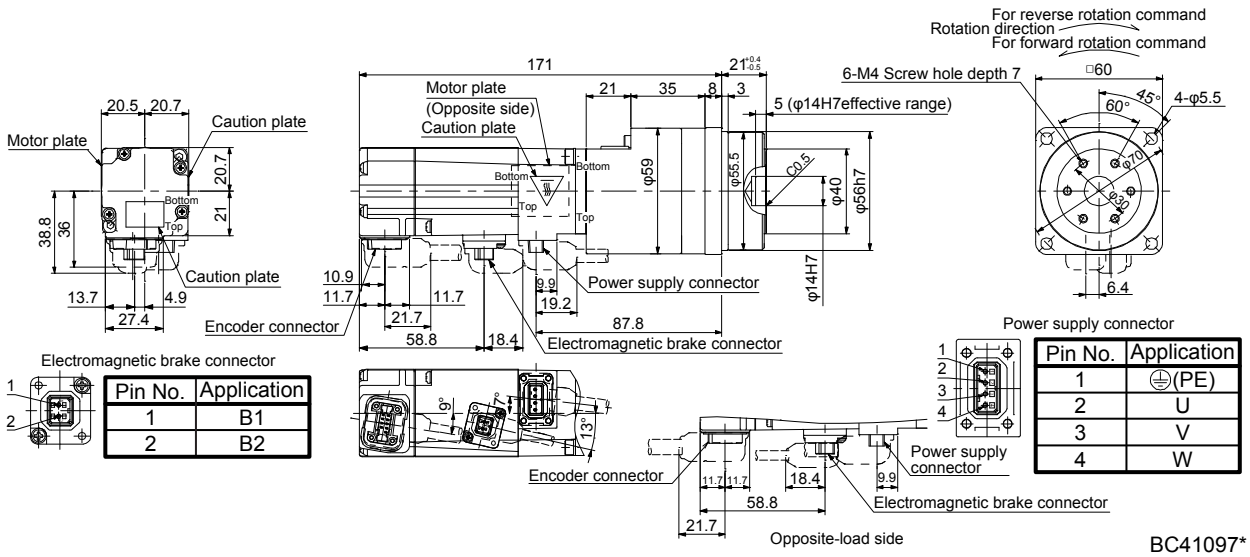

Pin No.	Application
1	B1
2	B2

Pin No.	Application
1	⏚(PE)
2	U
3	V
4	W

Model	Output [W]	Reducer model	Reduction ratio	Brake static friction torque [N•m]	Moment of inertia J [× 10^{-4} kg•m^2]	Mass [kg]
HG-KR13BG5	100	HPG-11B-05-F0ADG-S	1/5	0.32	0.0872	0.95

[Unit: mm]

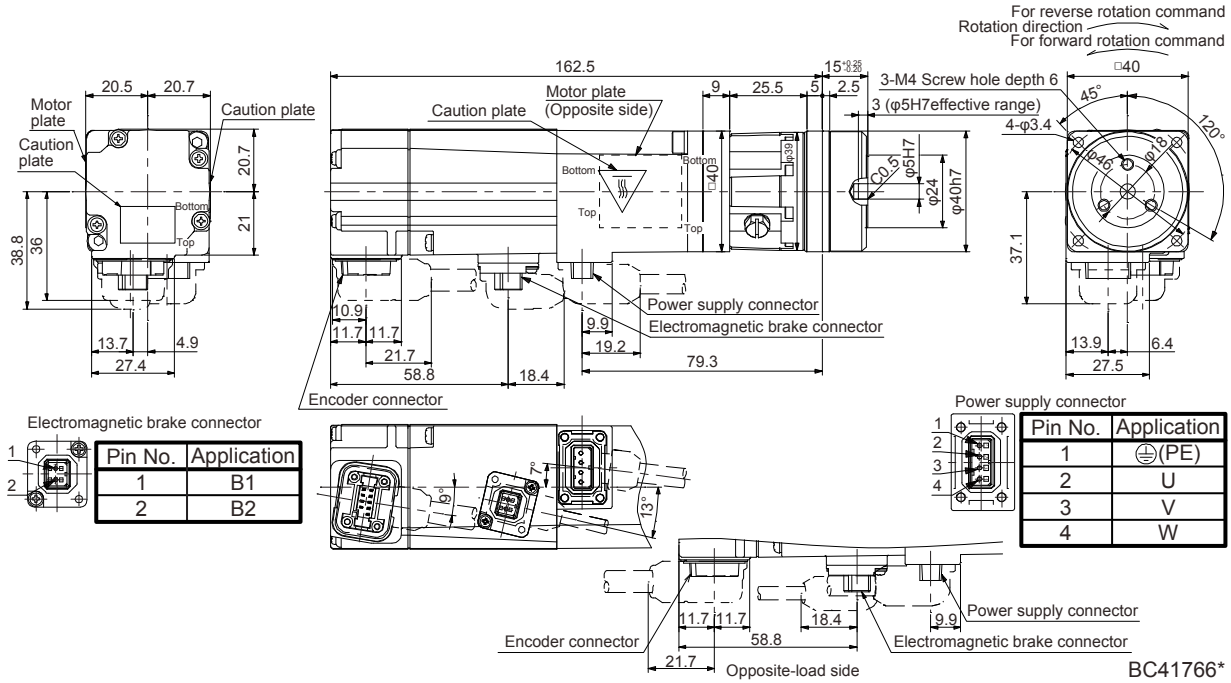

Pin No.	Application
1	B1
2	B2

Pin No.	Application
1	⏚(PE)
2	U
3	V
4	W

Model	Output [W]	Reducer model	Reduction ratio	Brake static friction torque [N•m]	Moment of inertia J [× 10^{-4} kg•m^2]	Mass [kg]
HG-KR13BG5	100	HPG-14A-05-F0CBJS-S	1/5	0.32	0.152	1.5
HG-KR13BG5	100	HPG-14A-11-F0CBKS-S	1/11	0.32	0.144	1.6
HG-KR13BG5	100	HPG-14A-21-F0CBKS-S	1/21	0.32	0.135	1.6

[Unit: mm]

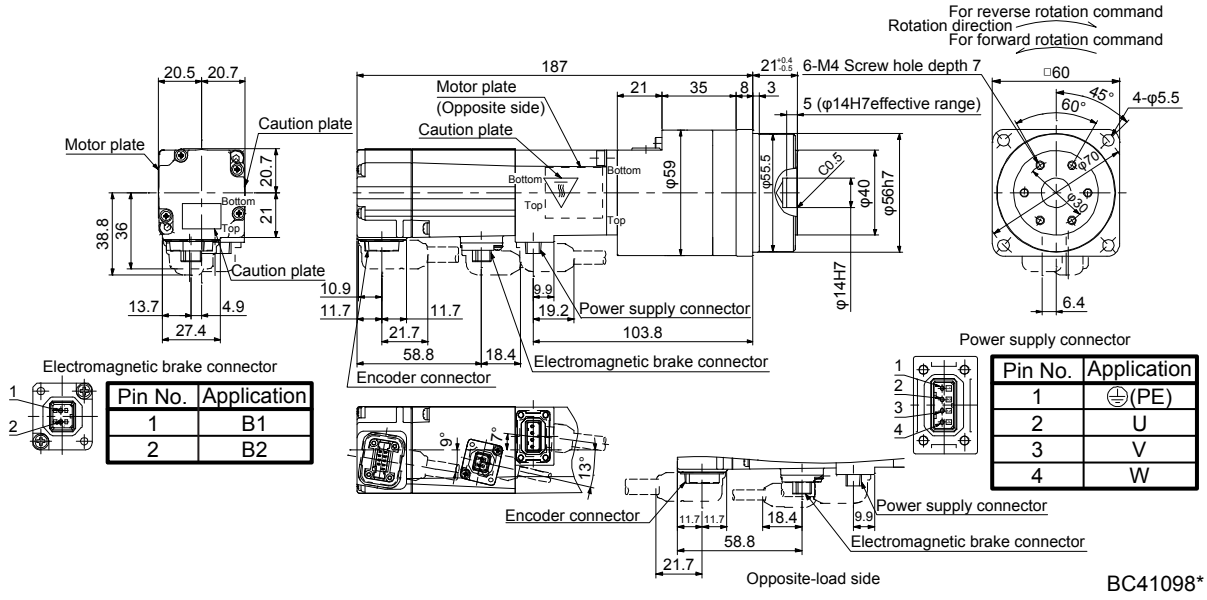

Pin No.	Application
1	B1
2	B2

Pin No.	Application
1	⏚(PE)
2	U
3	V
4	W

Model	Output [W]	Reducer model	Reduction ratio	Brake static friction torque [N•m]	Moment of inertia J [× 10^{-4} kg•m^2]	Mass [kg]
HG-KR13BG5	100	HPG-20A-33-F0JMLAS-S	1/33	0.32	0.146	2.8
HG-KR13BG5	100	HPG-20A-45-F0JMLAS-S	1/45	0.32	0.145	2.8

[Unit: mm]

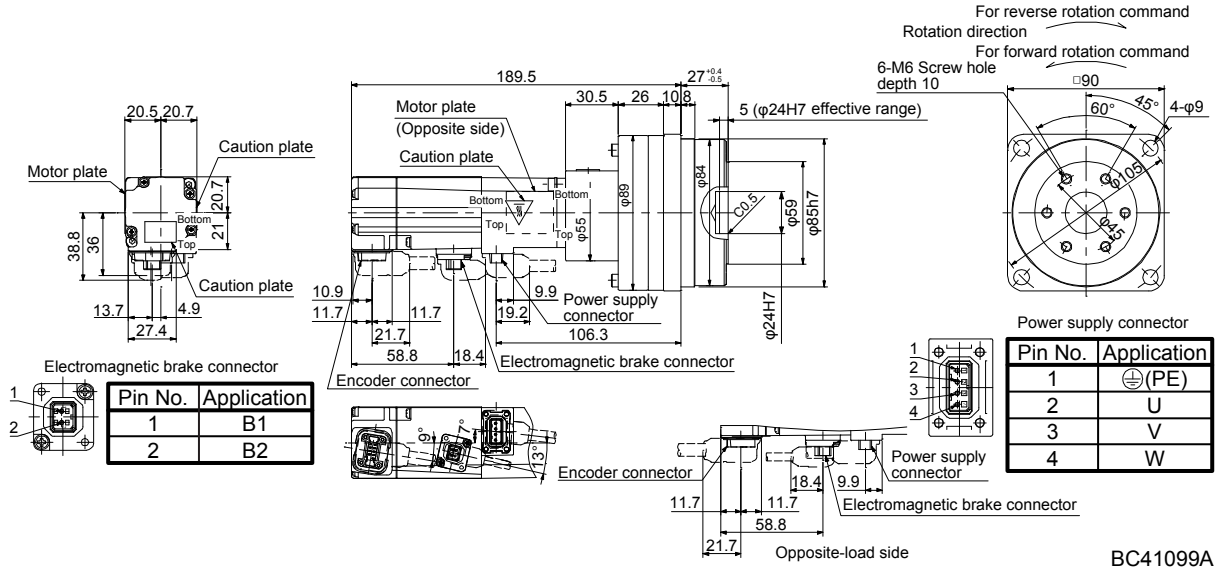

Model	Output [W]	Reducer model	Reduction ratio	Brake static friction torque [N•m]	Moment of inertia J [× 10^{-4} kg•m^2]	Mass [kg]
HG-KR23BG5	200	HPG-14A-05-F0AZW-S	1/5	1.3	0.444	2.2
HG-KR23BG5	200	HPG-14A-11-F0AZX-S	1/11	1.3	0.446	2.3

[Unit: mm]

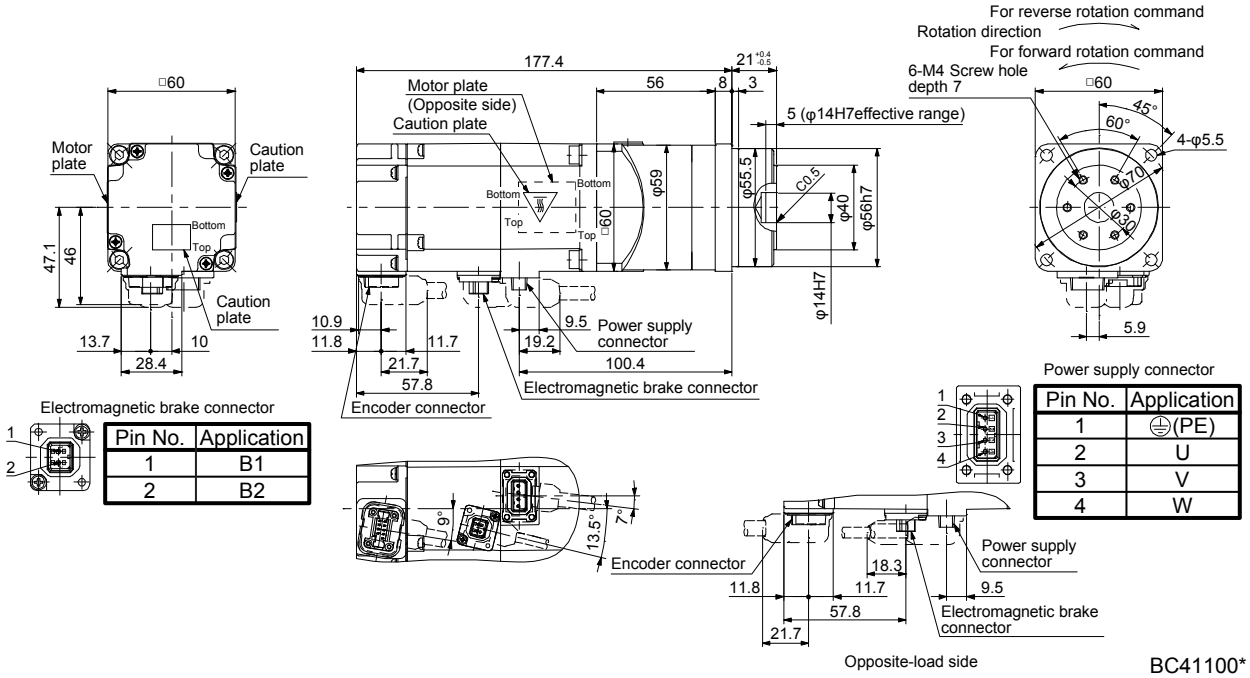

Model	Output [W]	Reducer model	Reduction ratio	Brake static friction torque [N•m]	Moment of inertia J [× 10^{-4} kg•m^2]	Mass [kg]
HG-KR23BG5	200	HPG-20A-21-F0EKS-S	1/21	1.3	0.741	3.8
HG-KR23BG5	200	HPG-20A-33-F0ELS-S	1/33	1.3	0.695	3.8
HG-KR23BG5	200	HPG-20A-45-F0ELS-S	1/45	1.3	0.694	3.8

[Unit: mm]

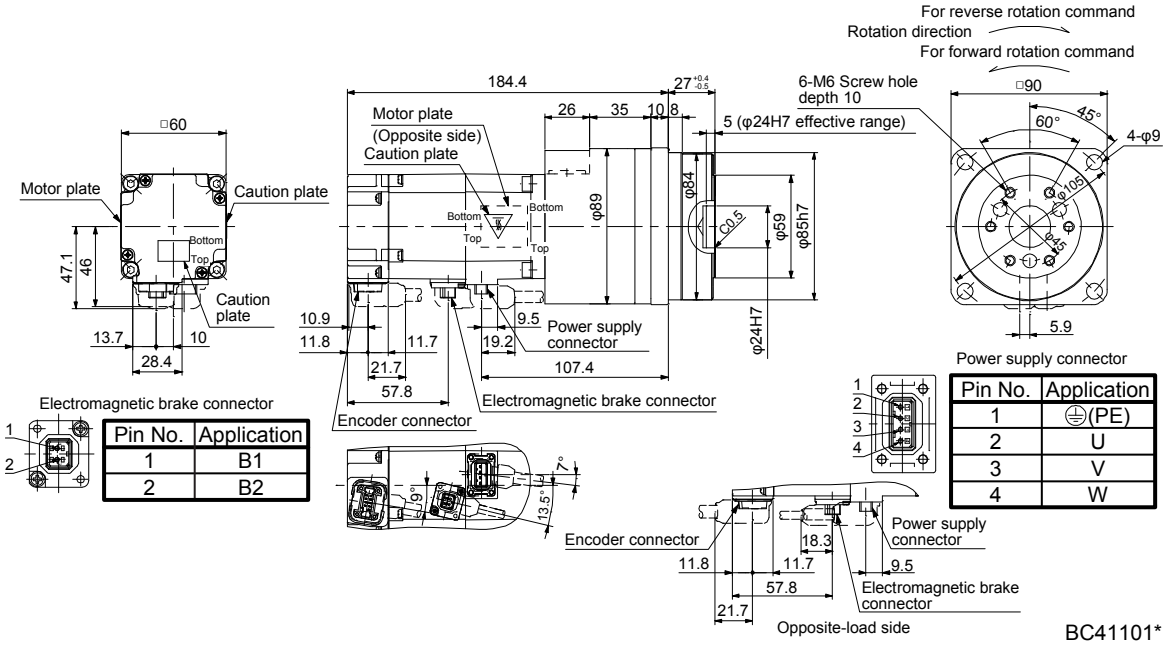

Model	Output [W]	Reducer model	Reduction ratio	Brake static friction torque [N•m]	Moment of inertia J [× 10^{-4} kg•m^2]	Mass [kg]
HG-KR43BG5	400	HPG-14A-05-F0AZW-S	1/5	1.3	0.594	2.7

[Unit: mm]

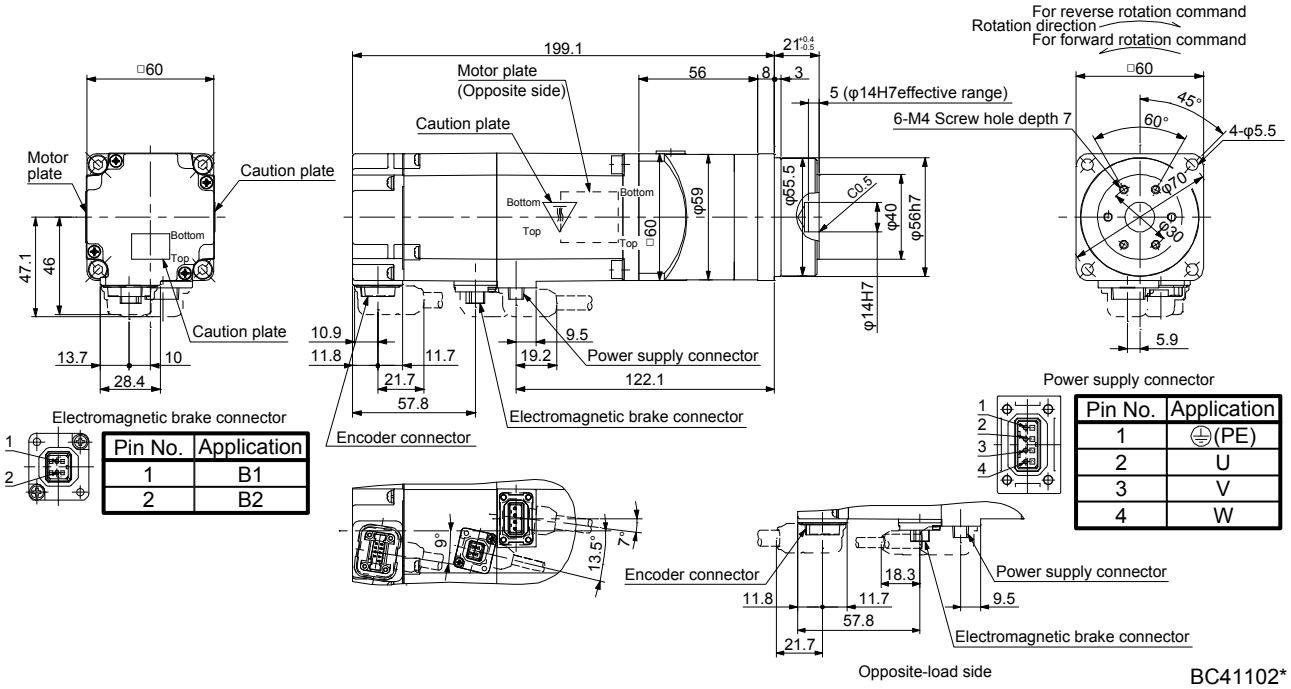

Model	Output [W]	Reducer model	Reduction ratio	Brake static friction torque [N•m]	Moment of inertia J [× 10^{-4} kg•m^2]	Mass [kg]
HG-KR43BG5	400	HPG-20A-11-F0EKS-S	1/11	1.3	0.969	4.3
HG-KR43BG5	400	HPG-20A-21-F0EKS-S	1/21	1.3	0.891	4.3

[Unit: mm]

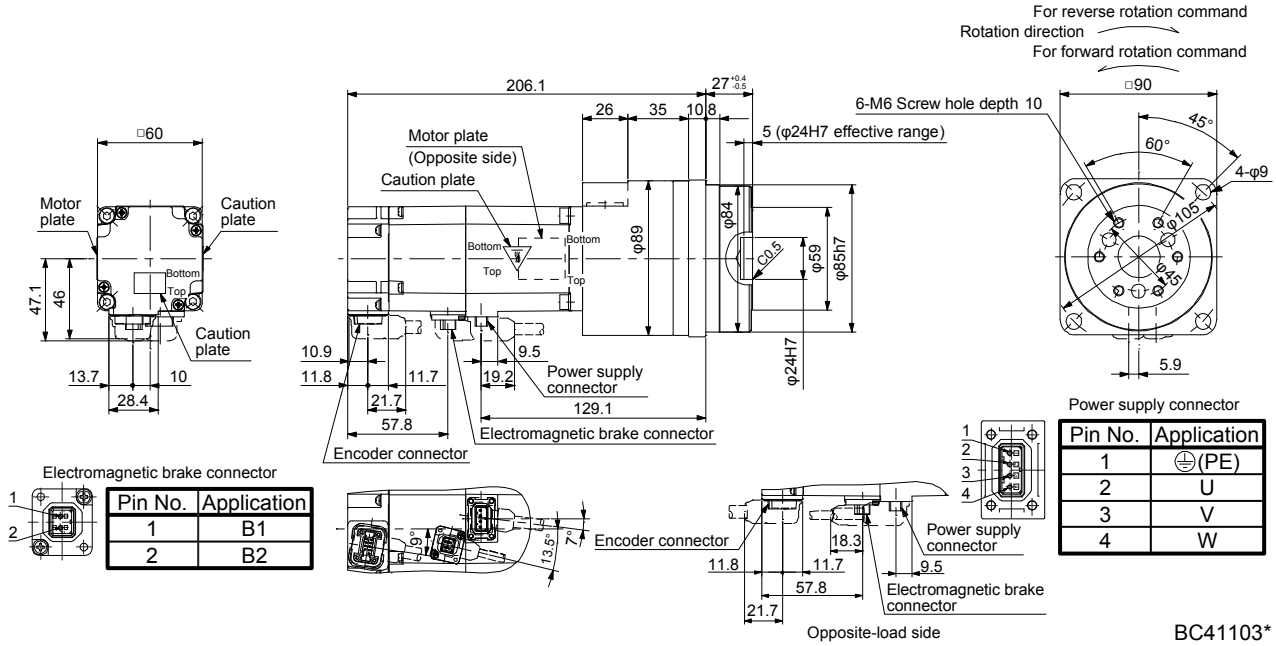

Model	Output [W]	Reducer model	Reduction ratio	Brake static friction torque [N•m]	Moment of inertia J [× 10^{-4} kg•m^2]	Mass [kg]
HG-KR43BG5	400	HPG-32A-33-F0RLAS-S	1/33	1.3	0.943	6.4
HG-KR43BG5	400	HPG-32A-45-F0RLAS-S	1/45	1.3	0.937	6.4

[Unit: mm]

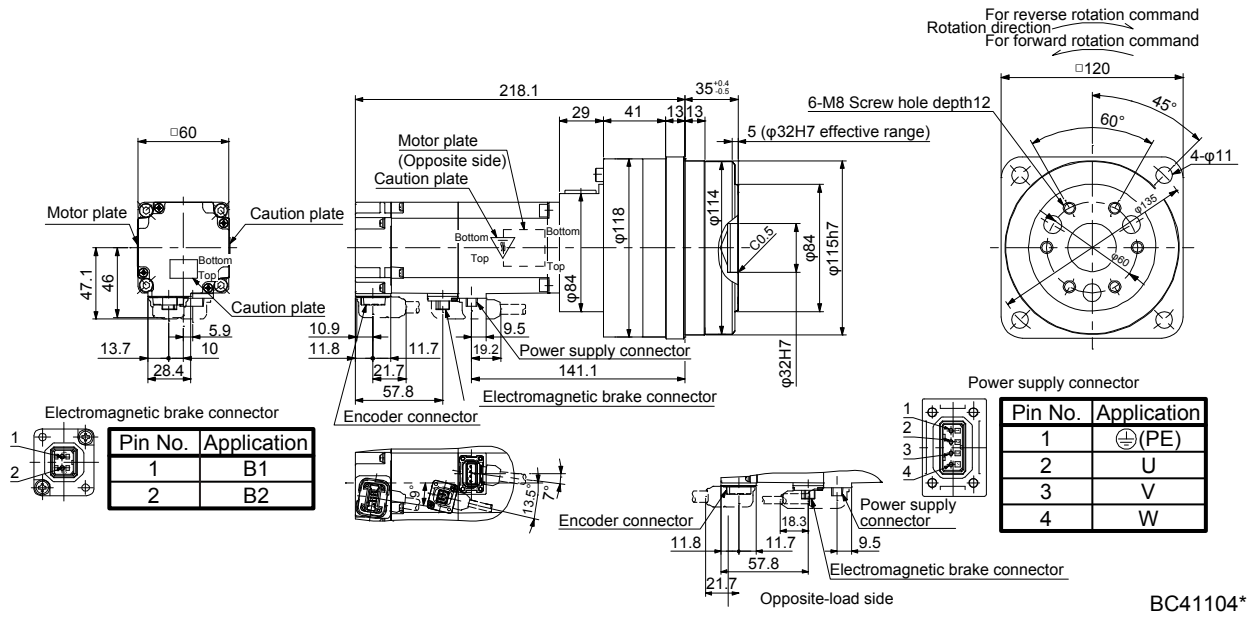

Model	Output [W]	Reducer model	Reduction ratio	Brake static friction torque [N•m]	Moment of inertia J [× 10^{-4} kg•m^2]	Mass [kg]
HG-KR73BG5	750	HPG-20A-05-F0FEOS-S	1/5	2.4	2.02	5.8
HG-KR73BG5	750	HPG-20A-11-F0FEPS-S	1/11	2.4	1.93	6.1

[Unit: mm]

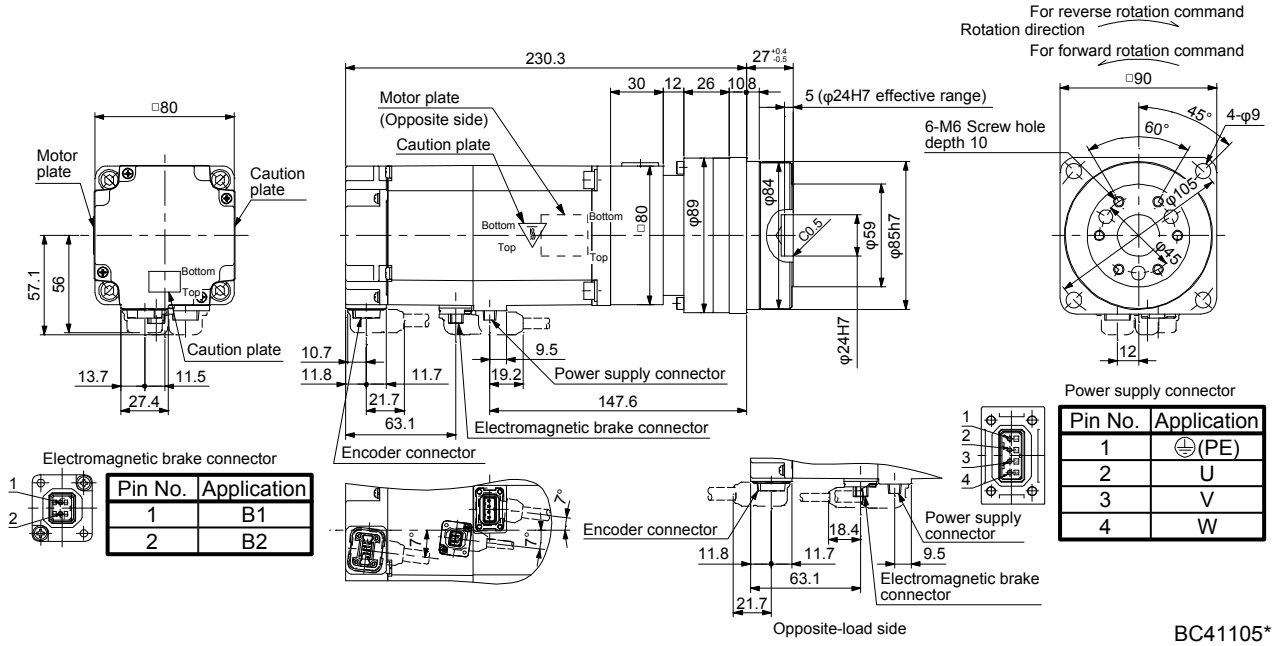

BC41105*

Model	Output [W]	Reducer model	Reduction ratio	Brake static friction torque [N•m]	Moment of inertia J [× 10^{-4} kg•m^2]	Mass [kg]
HG-KR73BG5	750	HPG-32A-21-F0SEIS-S	1/21	2.4	2.12	8.2
HG-KR73BG5	750	HPG-32A-33-F0SEJS-S	1/33	2.4	1.90	8.2
HG-KR73BG5	750	HPG-32A-45-F0SEJS-S	1/45	2.4	1.90	8.2

[Unit: mm]

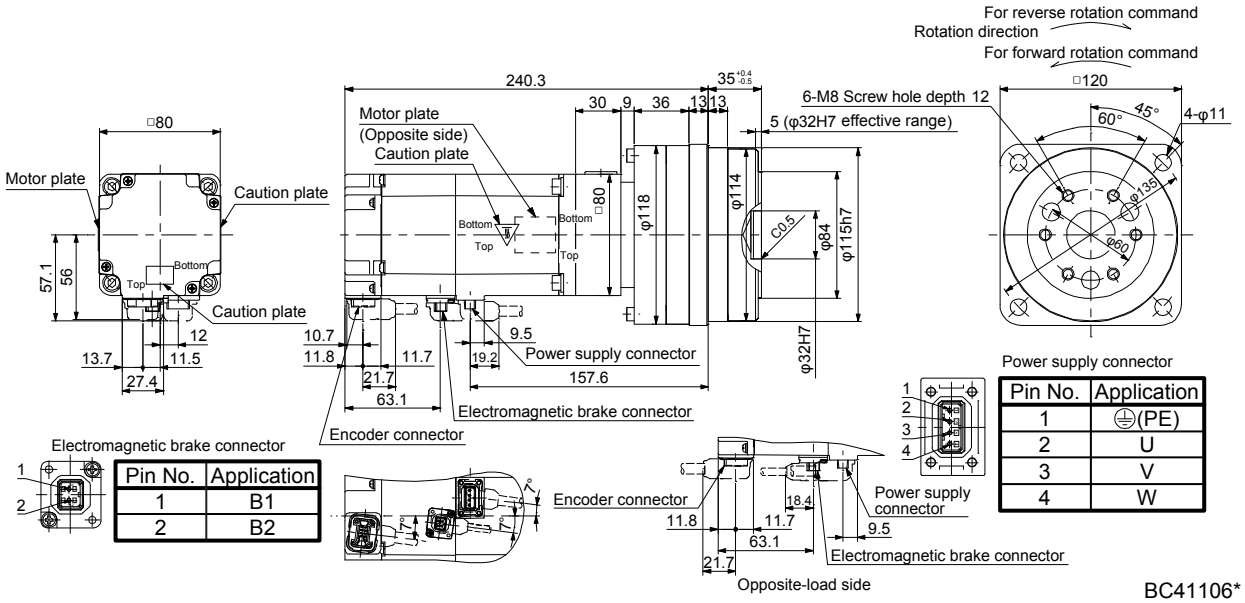

BC41106*

6.8.7 With shaft-output type reducer for high precision applications, flange mounting (without an electromagnetic brake)

Model	Output [W]	Reducer model	Reduction ratio	Moment of inertia J [× 10^{-4} kg•m^2]	Mass [kg]
HG-KR053G7	50	HPG-11B-05-F20ADG-S	1/5	0.0512	0.58
HG-KR053G7	50	HPG-11B-09-F20ADG-S	1/9	0.0492	0.58

[Unit: mm]

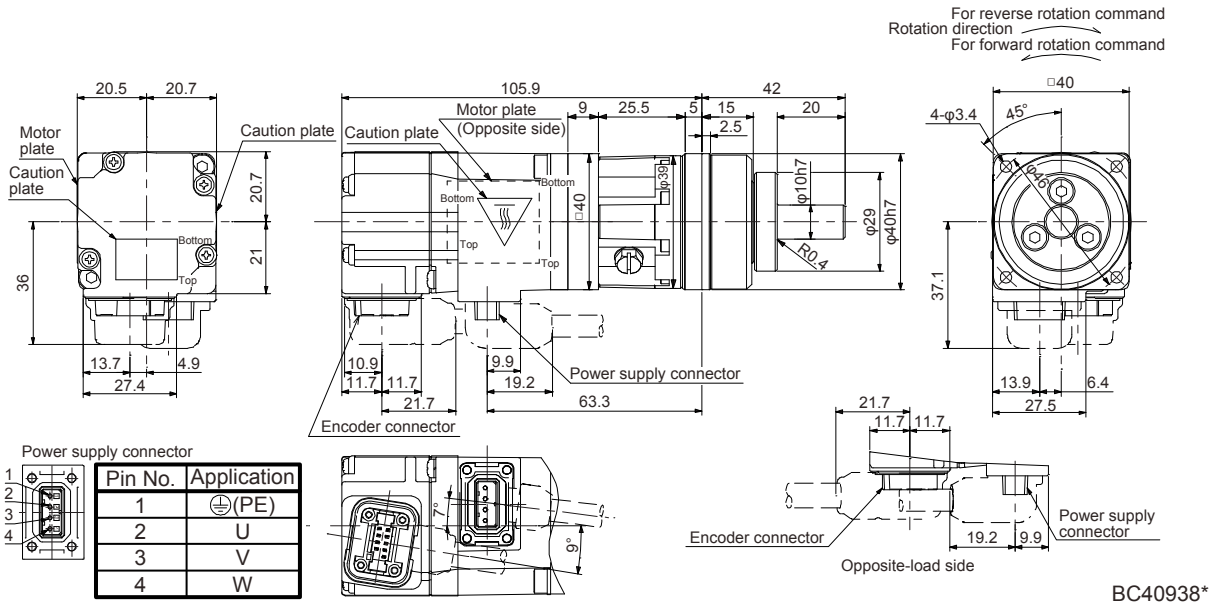

Pin No.	Application
1	⏚(PE)
2	U
3	V
4	W

BC40938*

Model	Output [W]	Reducer model	Reduction ratio	Moment of inertia J [× 10^{-4} kg•m^2]	Mass [kg]
HG-KR053G7	50	HPG-14A-05-J2CBJS-S	1/5	0.119	1.2
HG-KR053G7	50	HPG-14A-11-J2CBKS-S	1/11	0.106	1.3
HG-KR053G7	50	HPG-14A-21-J2CBKS-S	1/21	0.0960	1.3
HG-KR053G7	50	HPG-14A-33-J2CBLS-S	1/33	0.0900	1.3
HG-KR053G7	50	HPG-14A-45-J2CBLS-S	1/45	0.0900	1.3

[Unit: mm]

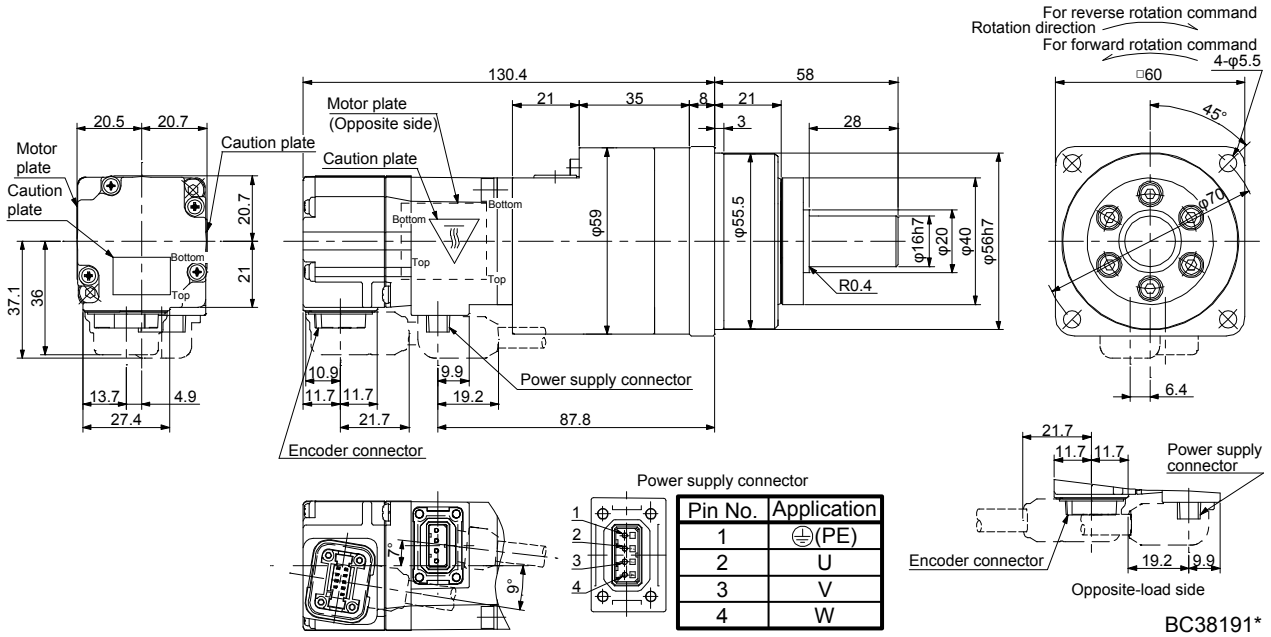

Pin No.	Application
1	⏚(PE)
2	U
3	V
4	W

BC38191*

Model	Output [W]	Reducer model	Reduction ratio	Moment of inertia J [× 10^{-4} kg•m^2]	Mass [kg]
HG-KR13G7	100	HPG-11B-05-J20ADG-S	1/5	0.0839	0.78

[Unit: mm]

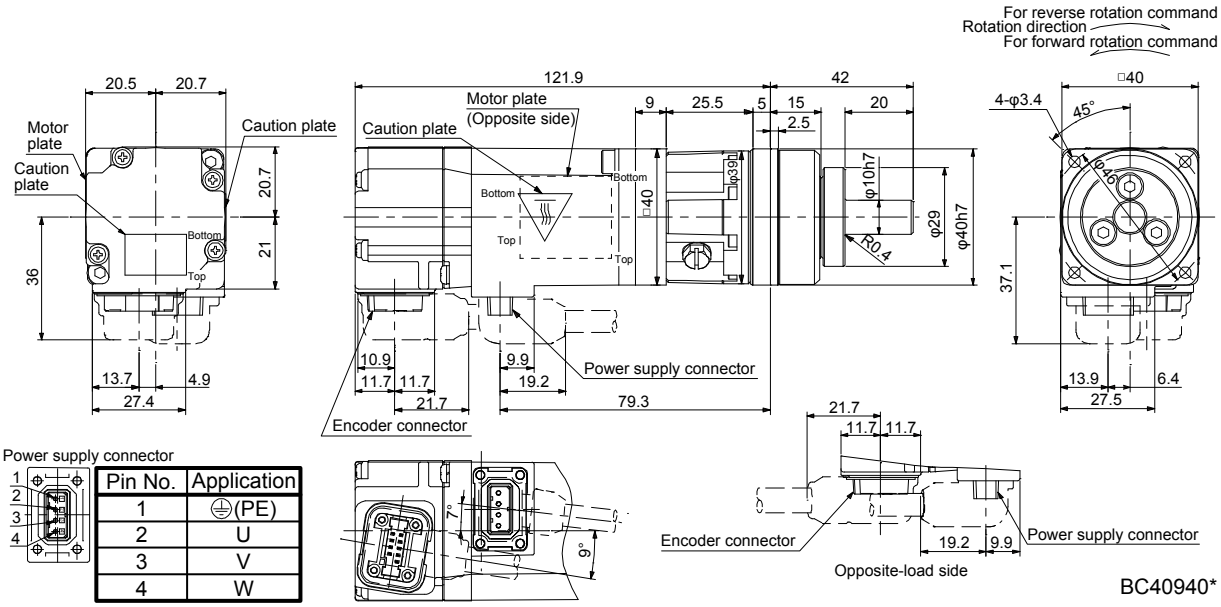

Pin No.	Application
1	⏚(PE)
2	U
3	V
4	W

BC40940*

Model	Output [W]	Reducer model	Reduction ratio	Moment of inertia J [× 10^{-4} kg•m^2]	Mass [kg]
HG-KR13G7	100	HPG-14A-05-J2CBJS-S	1/5	0.152	1.4
HG-KR13G7	100	HPG-14A-11-J2CBKS-S	1/11	0.139	1.5
HG-KR13G7	100	HPG-14A-21-J2CBKS-S	1/21	0.129	1.5

[Unit: mm]

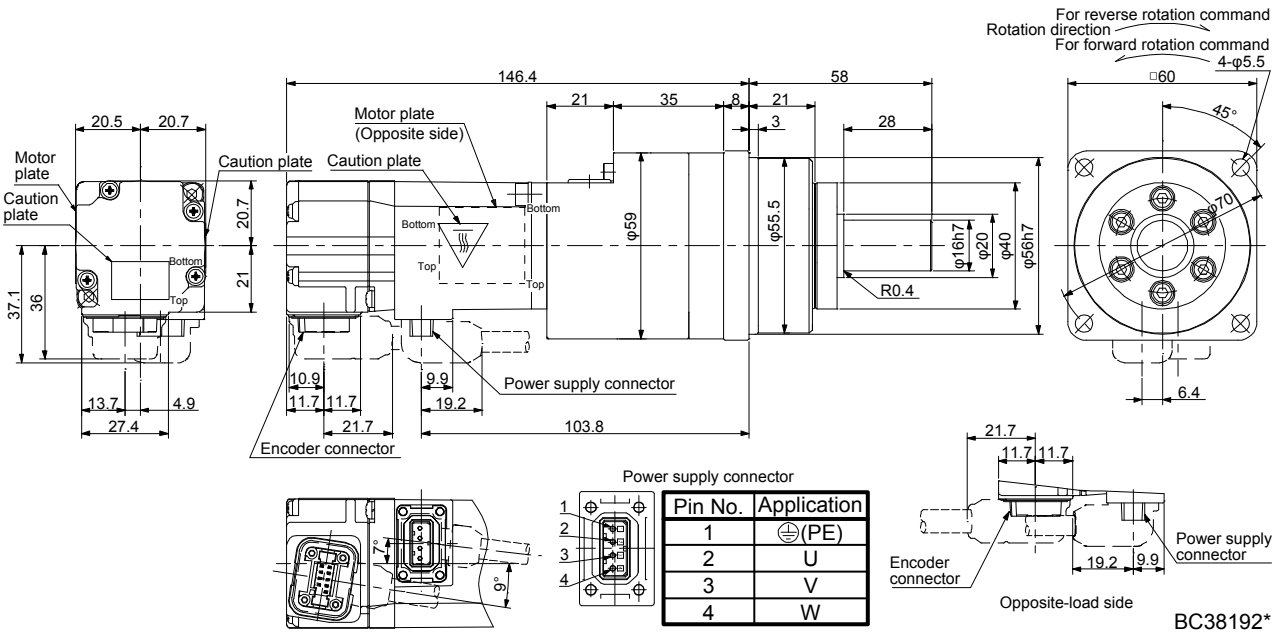

Pin No.	Application
1	⏚(PE)
2	U
3	V
4	W

BC38192*

Model	Output [W]	Reducer model	Reduction ratio	Moment of inertia J [× 10^{-4} kg•m^2]	Mass [kg]
HG-KR13G7	100	HPG-20A-33-J2JMLAS-S	1/33	0.141	3.0
HG-KR13G7	100	HPG-20A-45-J2JMLAS-S	1/45	0.139	3.0

[Unit: mm]

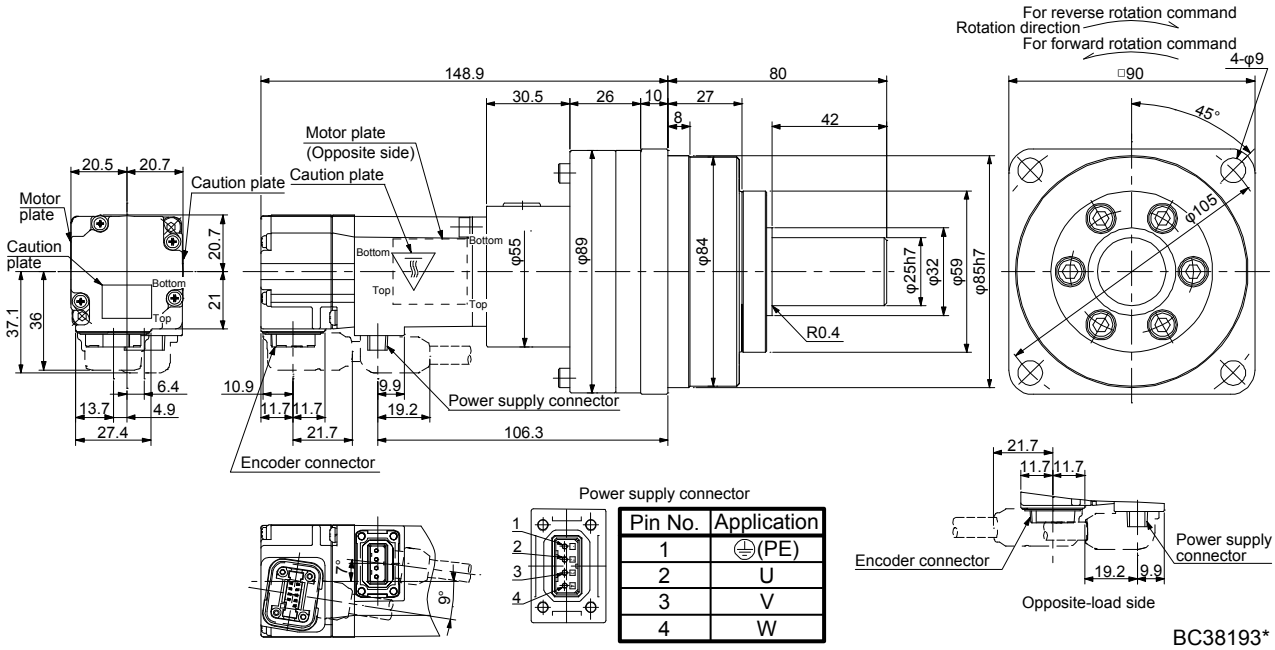

Pin No.	Application
1	⏚(PE)
2	U
3	V
4	W

BC38193*

Model	Output [W]	Reducer model	Reduction ratio	Moment of inertia J [× 10^{-4} kg•m^2]	Mass [kg]
HG-KR23G7	200	HPG-14A-05-J2AZW-S	1/5	0.428	1.9
HG-KR23G7	200	HPG-14A-11-J2AZX-S	1/11	0.424	2.0

[Unit: mm]

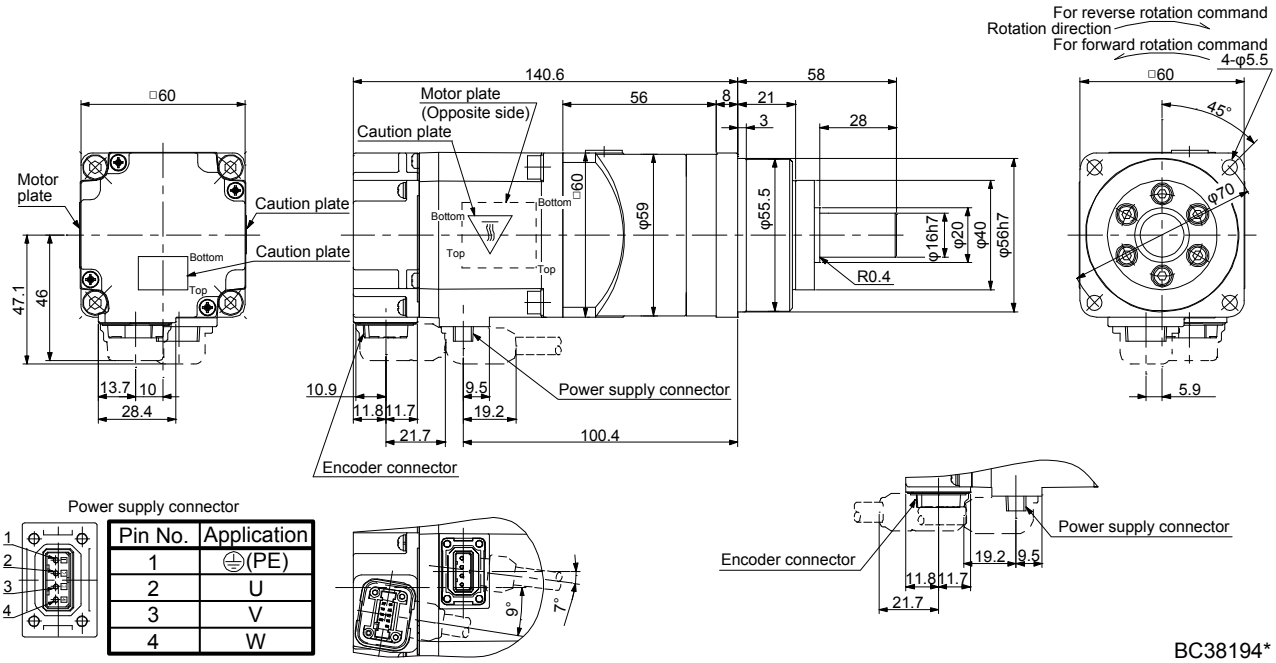

Pin No.	Application
1	⏚(PE)
2	U
3	V
4	W

BC38194*

Model	Output [W]	Reducer model	Reduction ratio	Moment of inertia J [× 10^{-4} kg•m^2]	Mass [kg]
HG-KR23G7	200	HPG-20A-21-J2EKS-S	1/21	0.721	3.8
HG-KR23G7	200	HPG-20A-33-J2ELS-S	1/33	0.674	3.8
HG-KR23G7	200	HPG-20A-45-J2ELS-S	1/45	0.672	3.8

[Unit: mm]

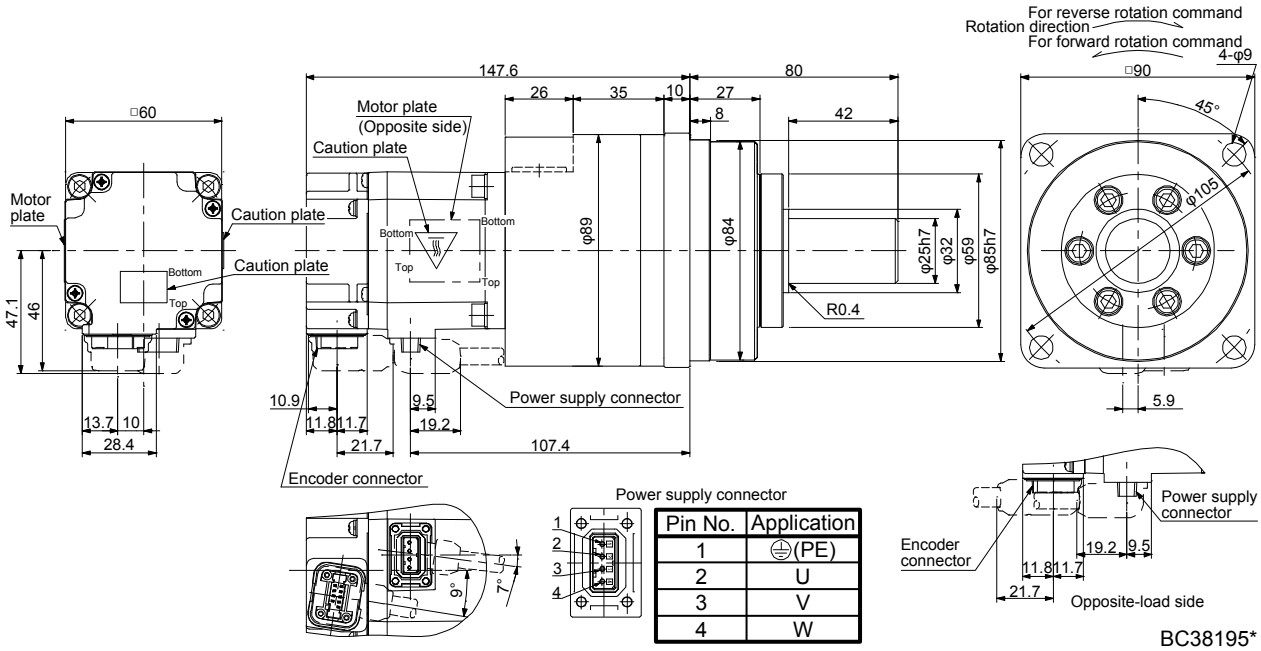

BC38195*

Model	Output [W]	Reducer model	Reduction ratio	Moment of inertia J [× 10^{-4} kg•m^2]	Mass [kg]
HG-KR43G7	400	HPG-14A-05-J2AZW-S	1/5	0.578	2.4

[Unit: mm]

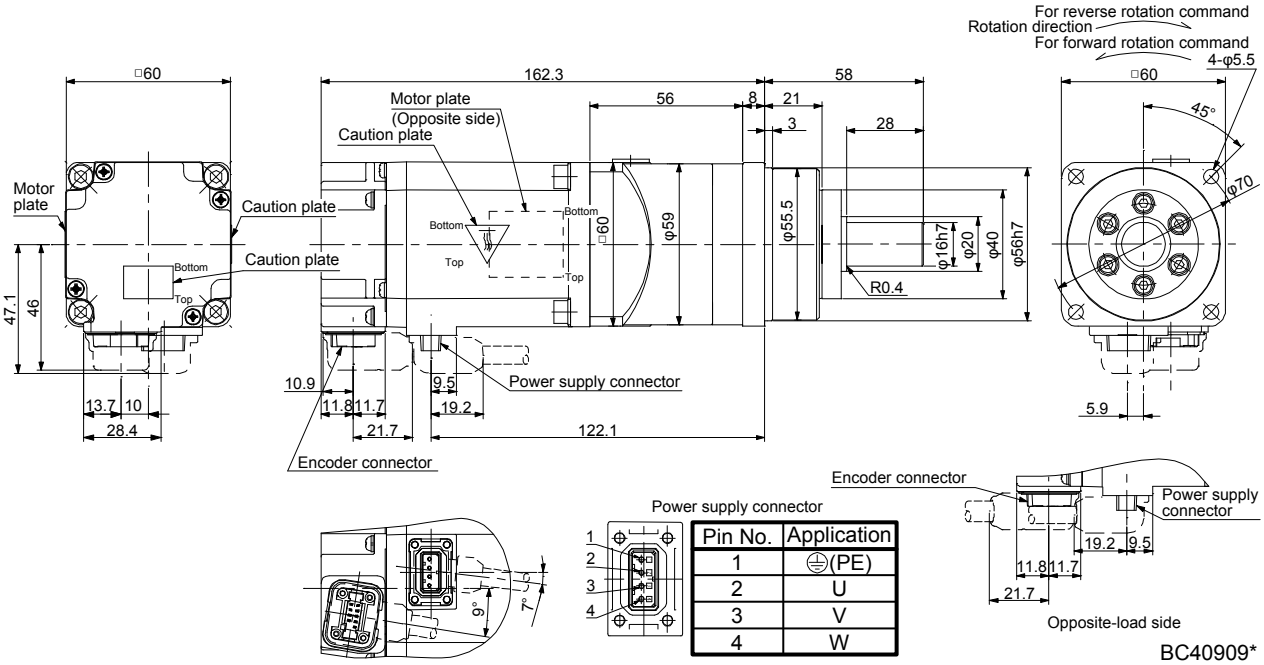

BC40909*

Model	Output [W]	Reducer model	Reduction ratio	Moment of inertia J [× 10^{-4} kg•m^2]	Mass [kg]
HG-KR43G7	400	HPG-20A-11-J2EKS-S	1/11	0.955	4.3
HG-KR43G7	400	HPG-20A-21-J2EKS-S	1/21	0.871	4.3

[Unit: mm]

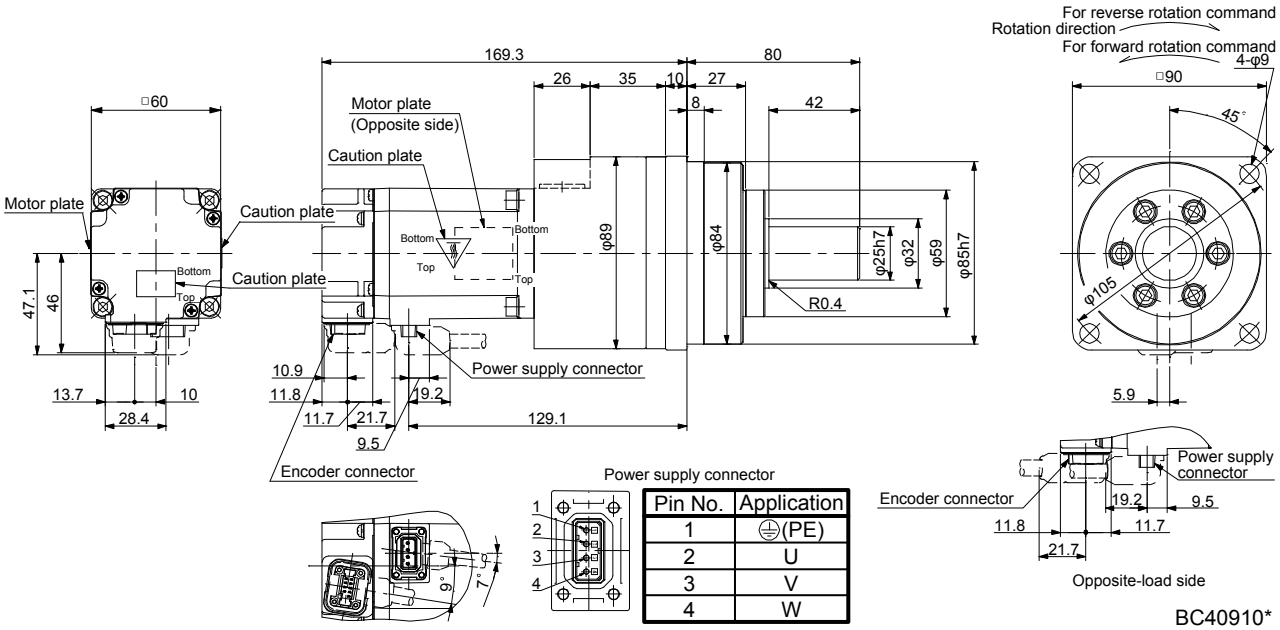

Pin No.	Application
1	⏚(PE)
2	U
3	V
4	W

BC40910*

Model	Output [W]	Reducer model	Reduction ratio	Moment of inertia J [× 10^{-4} kg•m^2]	Mass [kg]
HG-KR43G7	400	HPG-32A-33-J2RLAS-S	1/33	0.927	7.4
HG-KR43G7	400	HPG-32A-45-J2RLAS-S	1/45	0.918	7.4

[Unit: mm]

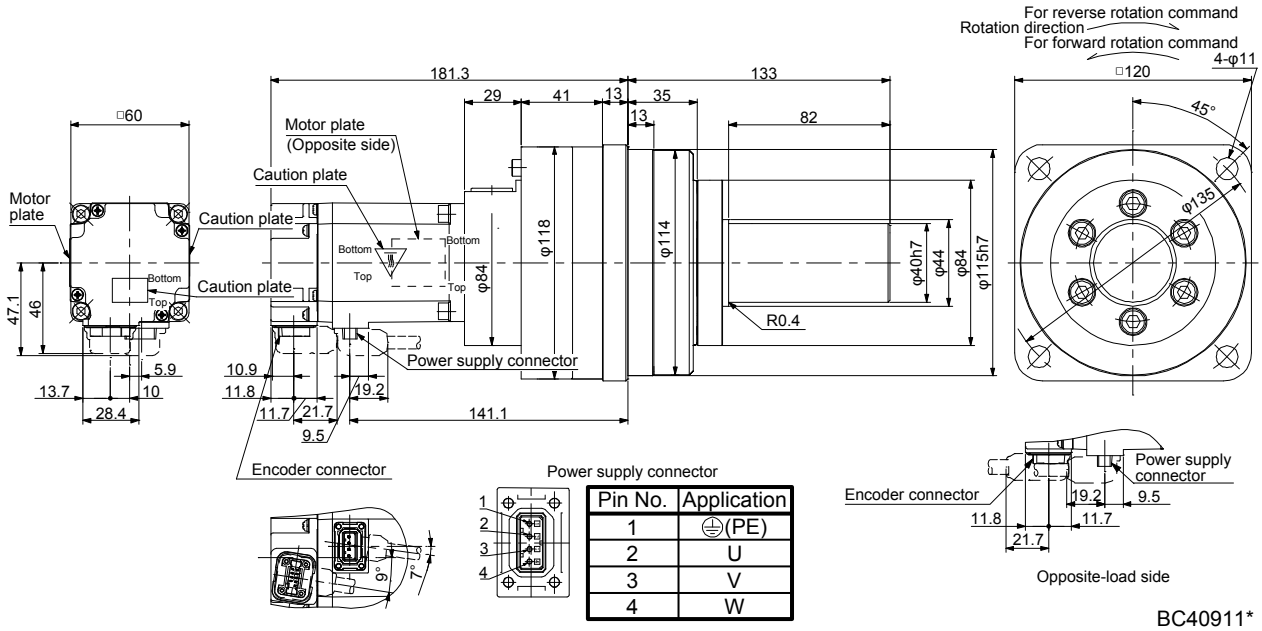

Pin No.	Application
1	⏚(PE)
2	U
3	V
4	W

BC40911*

Model	Output [W]	Reducer model	Reduction ratio	Moment of inertia J [× 10^{-4} kg•m^2]	Mass [kg]
HG-KR73G7	750	HPG-20A-05-J2FEOS-S	1/5	1.95	5.2
HG-KR73G7	750	HPG-20A-11-J2FEPS-S	1/11	1.83	5.5

[Unit: mm]

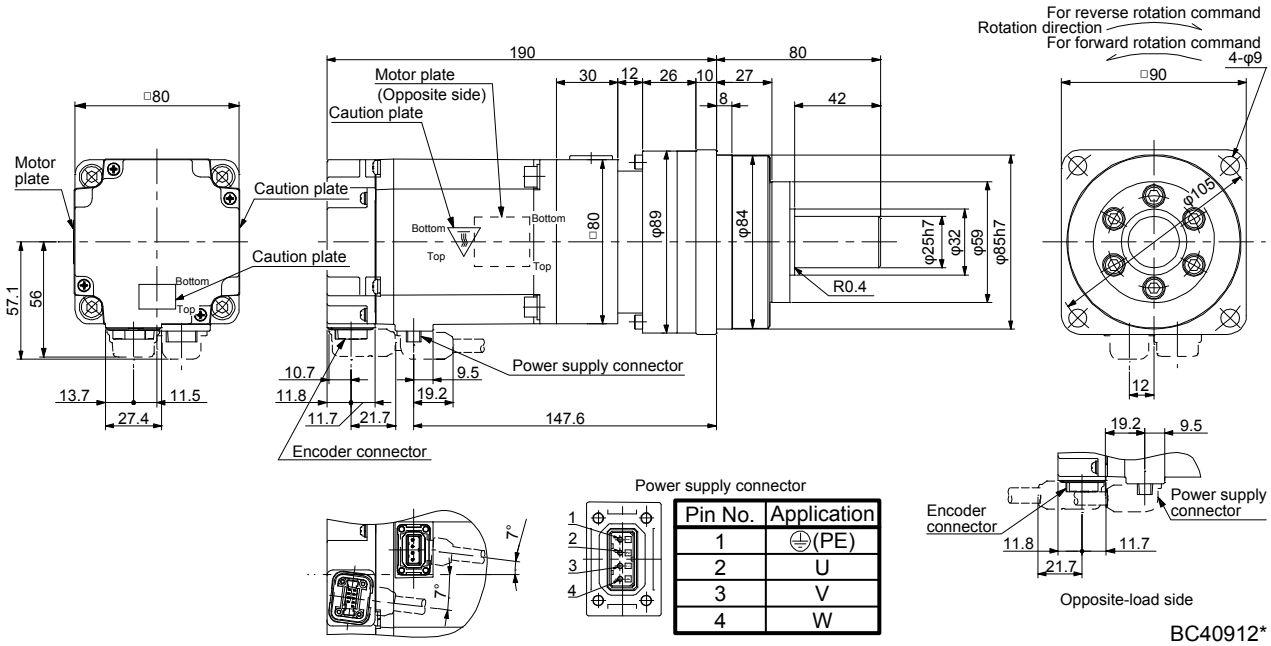

Pin No.	Application
1	⏚(PE)
2	U
3	V
4	W

BC40912*

Model	Output [W]	Reducer model	Reduction ratio	Moment of inertia J [× 10^{-4} kg•m^2]	Mass [kg]
HG-KR73G7	750	HPG-32A-21-J2SEIS-S	1/21	2.03	8.6
HG-KR73G7	750	HPG-32A-33-J2SEJS-S	1/33	1.80	8.6
HG-KR73G7	750	HPG-32A-45-J2SEJS-S	1/45	1.79	8.6

[Unit: mm]

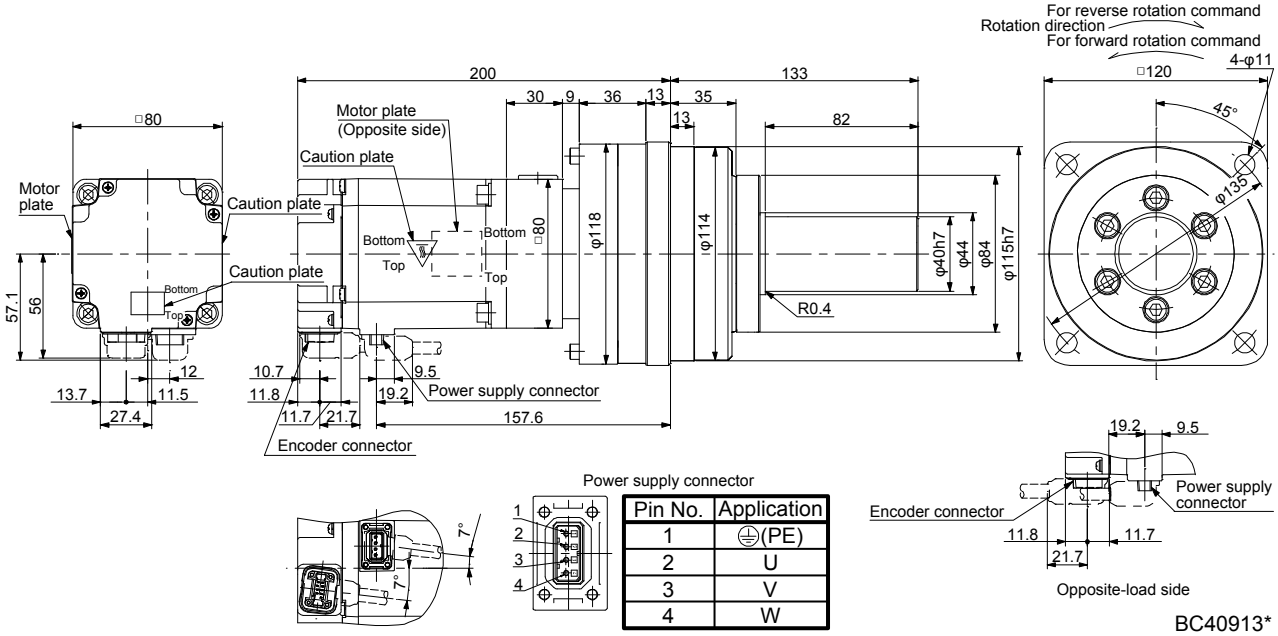

Pin No.	Application
1	⏚(PE)
2	U
3	V
4	W

BC40913*

6.8.8 With shaft-output type reducer for high precision applications, flange mounting (with an electromagnetic brake)

Model	Output [W]	Reducer model	Reduction ratio	Brake static friction torque [N•m]	Moment of inertia J [× 10^{-4} kg•m^2]	Mass [kg]
HG-KR053BG7	50	HPG-11B-05-J20ADG-S	1/5	0.32	0.0534	0.78
HG-KR053BG7	50	HPG-11B-09-J20ADG-S	1/9	0.32	0.0514	0.78

[Unit: mm]

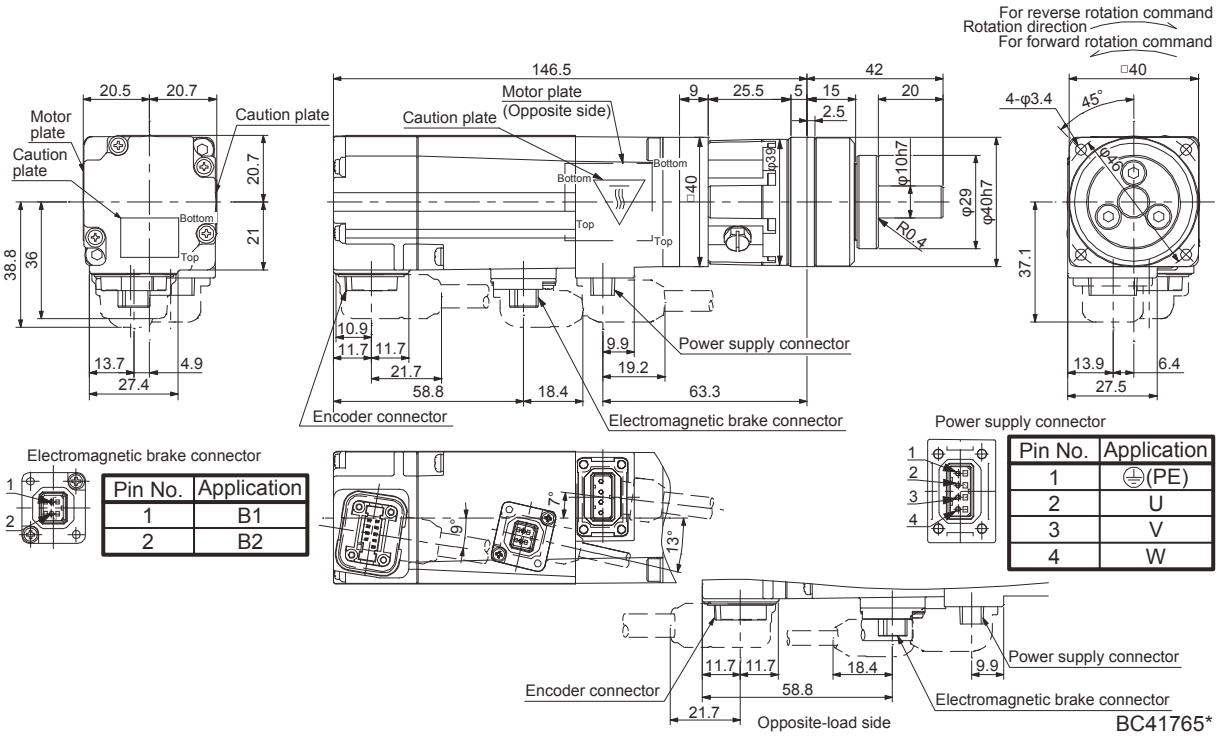

Model	Output [W]	Reducer model	Reduction ratio	Brake static friction torque [N•m]	Moment of inertia J [× 10^{-4} kg•m^2]	Mass [kg]
HG-KR053BG7	50	HPG-14A-05-J2CBJS-S	1/5	0.32	0.121	1.4
HG-KR053BG7	50	HPG-14A-11-J2CBKS-S	1/11	0.32	0.108	1.5
HG-KR053BG7	50	HPG-14A-21-J2CBKS-S	1/21	0.32	0.0980	1.5
HG-KR053BG7	50	HPG-14A-33-J2CBLS-S	1/33	0.32	0.0920	1.5
HG-KR053BG7	50	HPG-14A-45-J2CBLS-S	1/45	0.32	0.0920	1.5

[Unit: mm]

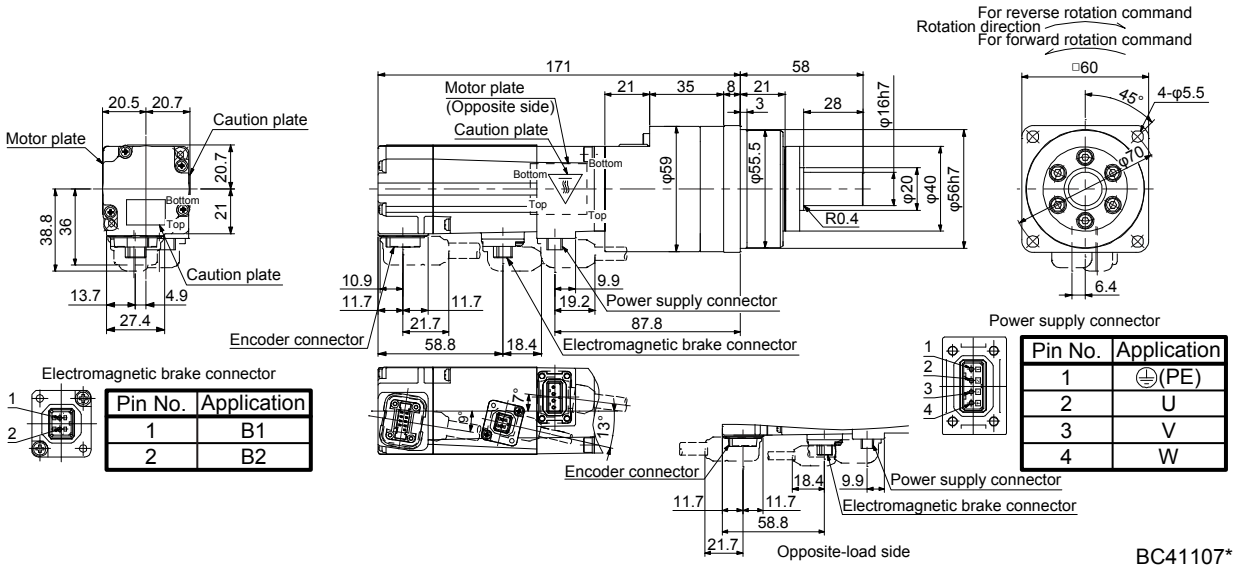

Pin No.	Application
1	B1
2	B2

Pin No.	Application
1	⏚(PE)
2	U
3	V
4	W

BC41107*

Model	Output [W]	Reducer model	Reduction ratio	Brake static friction torque [N•m]	Moment of inertia J [× 10^{-4} kg•m^2]	Mass [kg]
HG-KR13BG7	50	HPG-11B-05-J20ADG-S	1/5	0.32	0.0899	0.98

[Unit: mm]

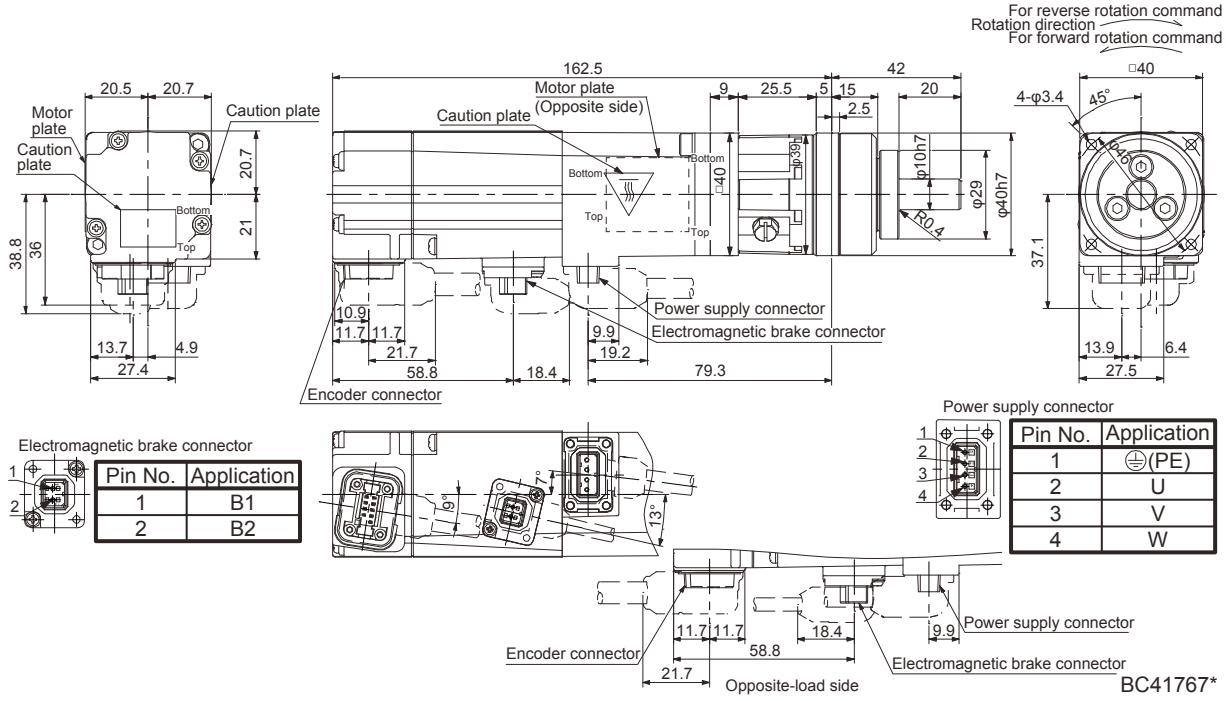

Pin No.	Application
1	B1
2	B2

Pin No.	Application
1	⏚(PE)
2	U
3	V
4	W

BC41767*

Model	Output [W]	Reducer model	Reduction ratio	Brake static friction torque [N•m]	Moment of inertia J [× 10^{-4} kg•m^2]	Mass [kg]
HG-KR13BG7	100	HPG-14A-05-J2CBJS-S	1/5	0.32	0.158	1.6
HG-KR13BG7	100	HPG-14A-11-J2CBKS-S	1/11	0.32	0.145	1.7
HG-KR13BG7	100	HPG-14A-21-J2CBKS-S	1/21	0.32	0.135	1.7

[Unit: mm]

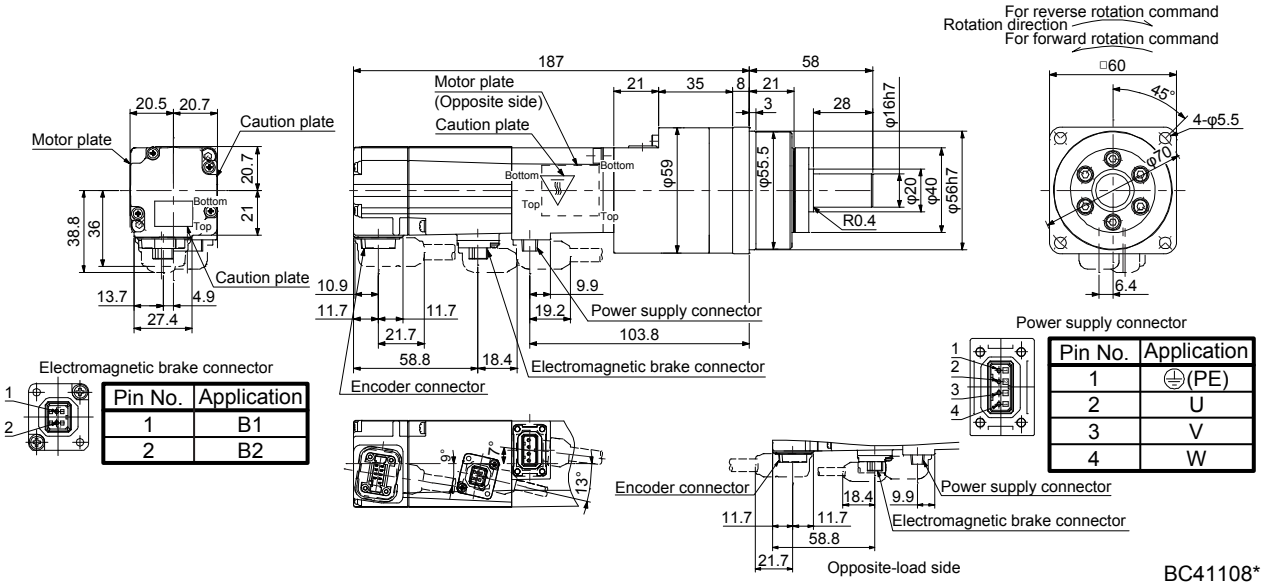

Model	Output [W]	Reducer model	Reduction ratio	Brake static friction torque [N•m]	Moment of inertia J [× 10^{-4} kg•m^2]	Mass [kg]
HG-KR13BG7	100	HPG-20A-33-J2JMLAS-S	1/33	0.32	0.147	3.2
HG-KR13BG7	100	HPG-20A-45-J2JMLAS-S	1/45	0.32	0.145	3.2

[Unit: mm]

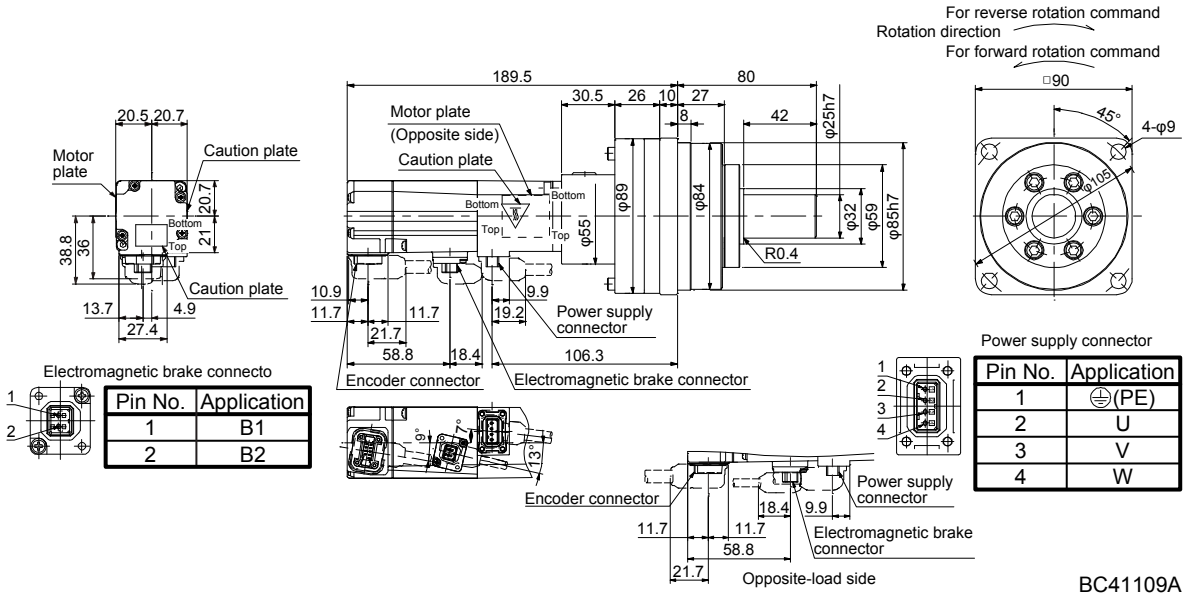

Model	Output [W]	Reducer model	Reduction ratio	Brake static friction torque [N•m]	Moment of inertia J [× 10^{-4} kg•m^2]	Mass [kg]
HG-KR23BG7	200	HPG-14A-05-J2AZW-S	1/5	1.3	0.450	2.3
HG-KR23BG7	200	HPG-14A-11-J2AZX-S	1/11	1.3	0.446	2.4

[Unit: mm]

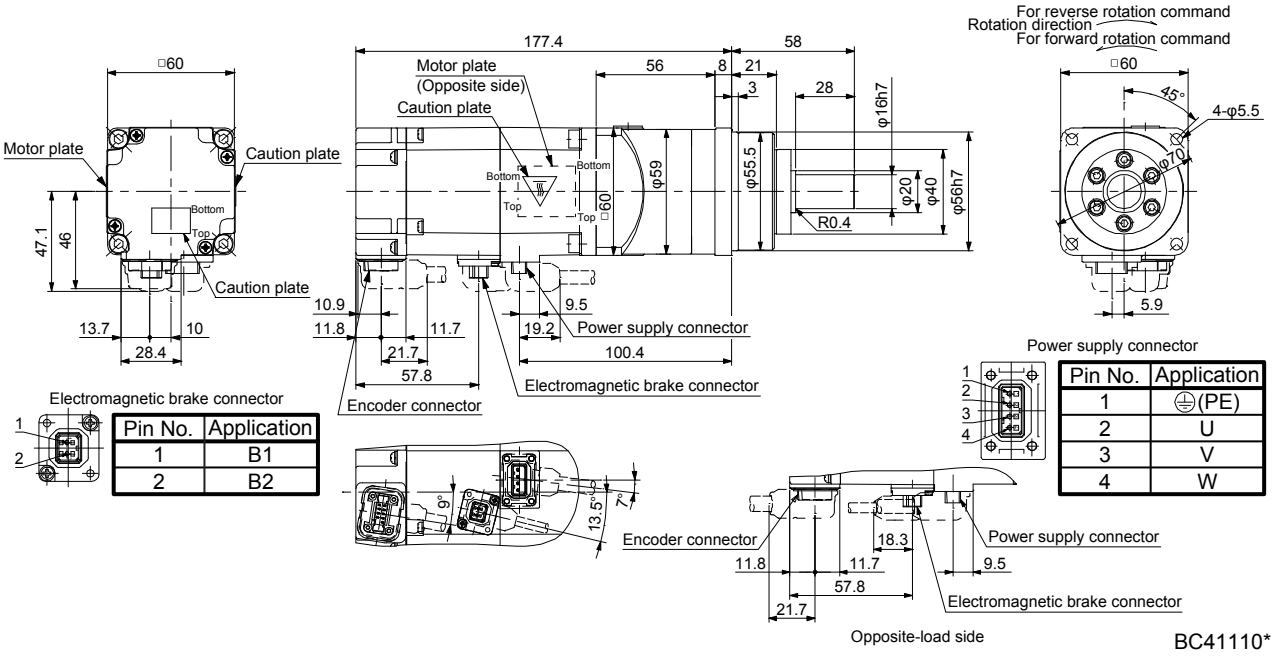

Pin No.	Application
1	B1
2	B2

Pin No.	Application
1	⏚(PE)
2	U
3	V
4	W

BC41110*

Model	Output [W]	Reducer model	Reduction ratio	Brake static friction torque [N•m]	Moment of inertia J [× 10^{-4} kg•m^2]	Mass [kg]
HG-KR23BG7	200	HPG-20A-21-J2EKS-S	1/21	1.3	0.743	4.2
HG-KR23BG7	200	HPG-20A-33-J2ELS-S	1/33	1.3	0.696	4.2
HG-KR23BG7	200	HPG-20A-45-J2ELS-S	1/45	1.3	0.694	4.2

[Unit: mm]

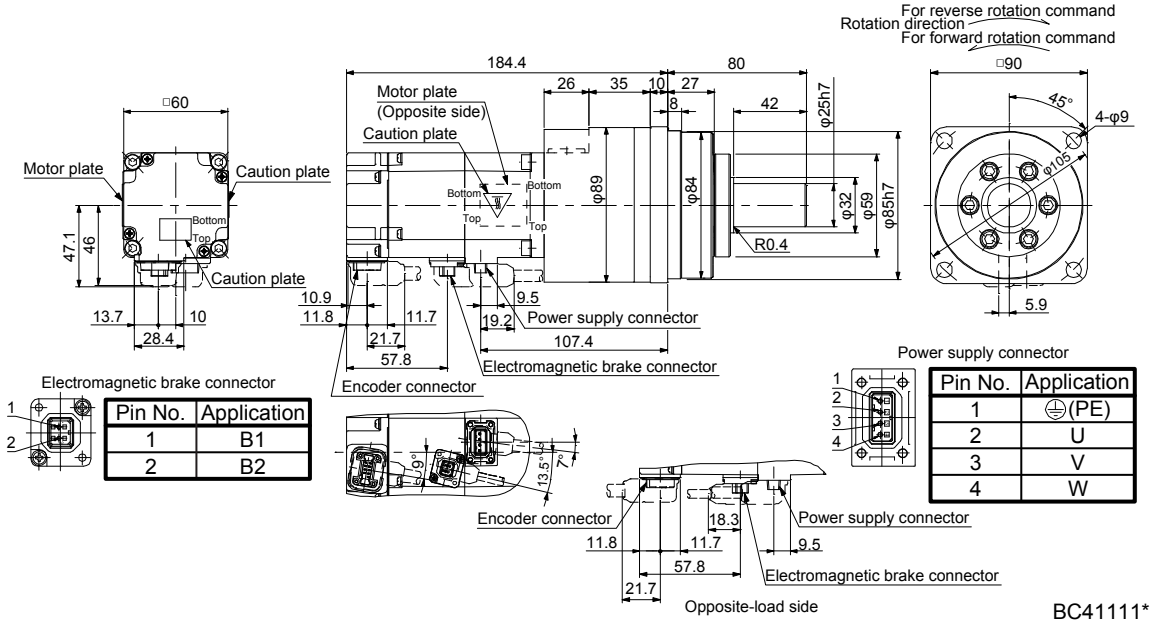

Pin No.	Application
1	B1
2	B2

Pin No.	Application
1	⏚(PE)
2	U
3	V
4	W

BC41111*

Model	Output [W]	Reducer model	Reduction ratio	Brake static friction torque [N•m]	Moment of inertia J [× 10^{-4} kg•m^2]	Mass [kg]
HG-KR43BG7	400	HPG-14A-05-J2AZW-S	1/5	1.3	0.600	2.8

[Unit: mm]

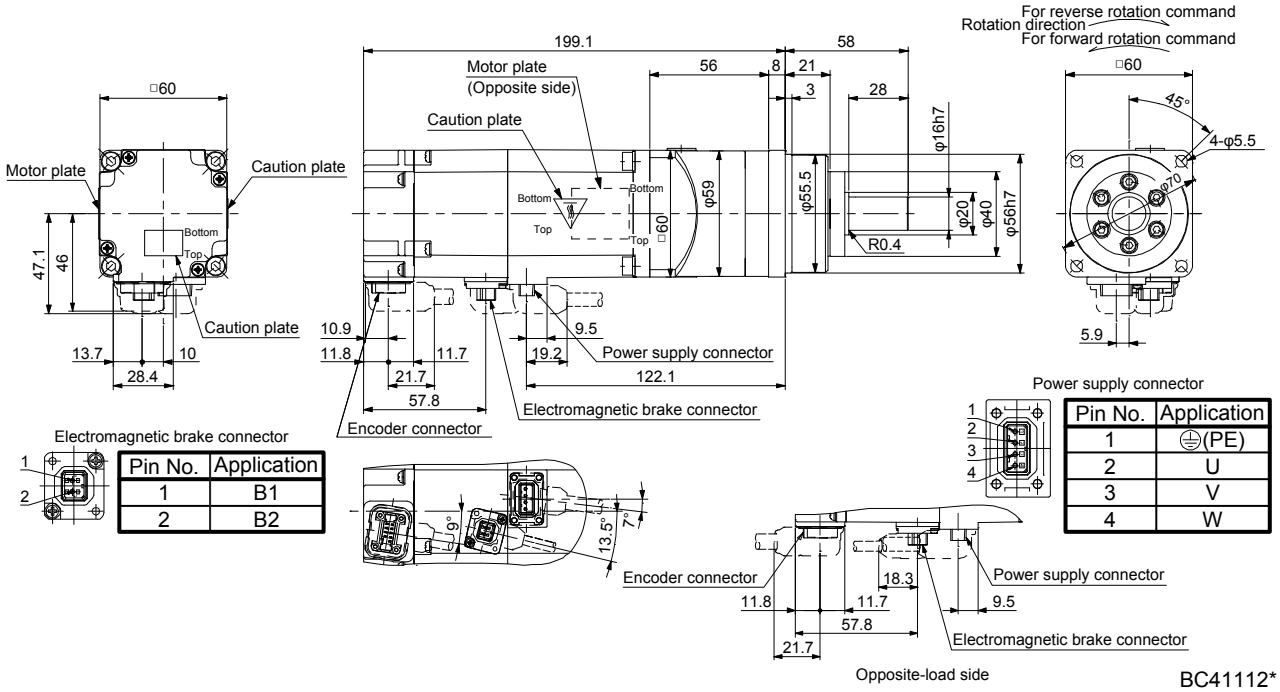

BC41112*

Model	Output [W]	Reducer model	Reduction ratio	Brake static friction torque [N•m]	Moment of inertia J [× 10^{-4} kg•m^2]	Mass [kg]
HG-KR43BG7	400	HPG-20A-11-J2EKS-S	1/11	1.3	0.977	4.7
HG-KR43BG7	400	HPG-20A-21-J2EKS-S	1/21	1.3	0.893	4.7

[Unit: mm]

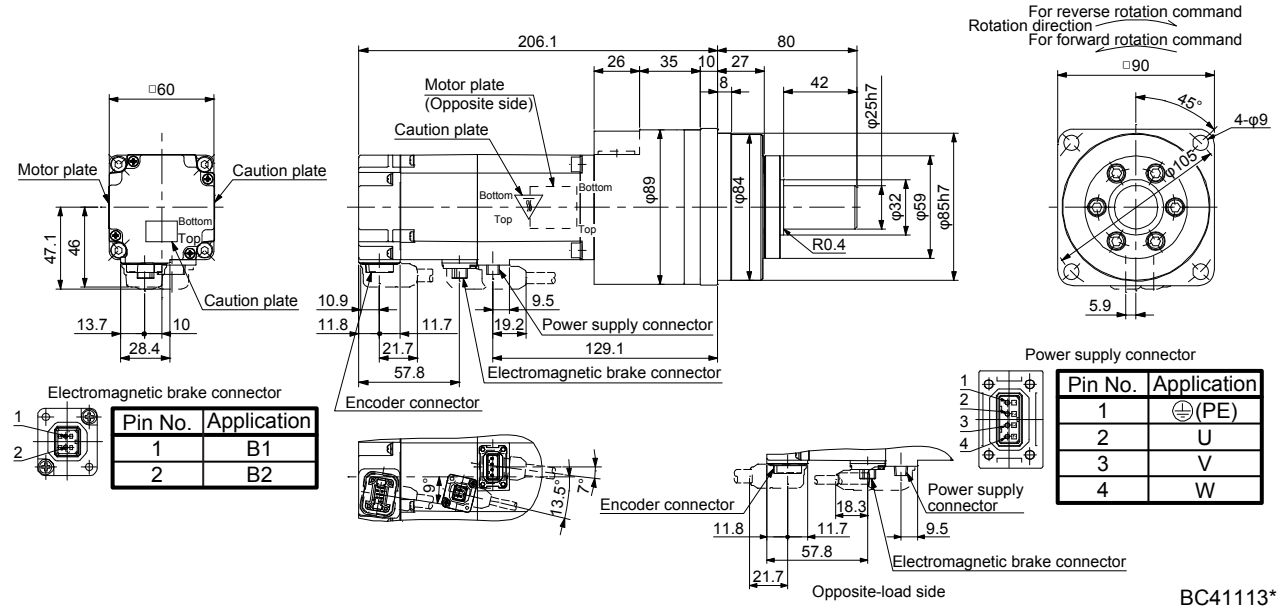

BC41113*

Model	Output [W]	Reducer model	Reduction ratio	Brake static friction torque [N•m]	Moment of inertia J [× 10^{-4} kg•m^2]	Mass [kg]
HG-KR43BG7	400	HPG-32A-33-J2RLAS-S	1/33	1.3	0.949	7.8
HG-KR43BG7	400	HPG-32A-45-J2RLAS-S	1/45	1.3	0.940	7.8

[Unit: mm]

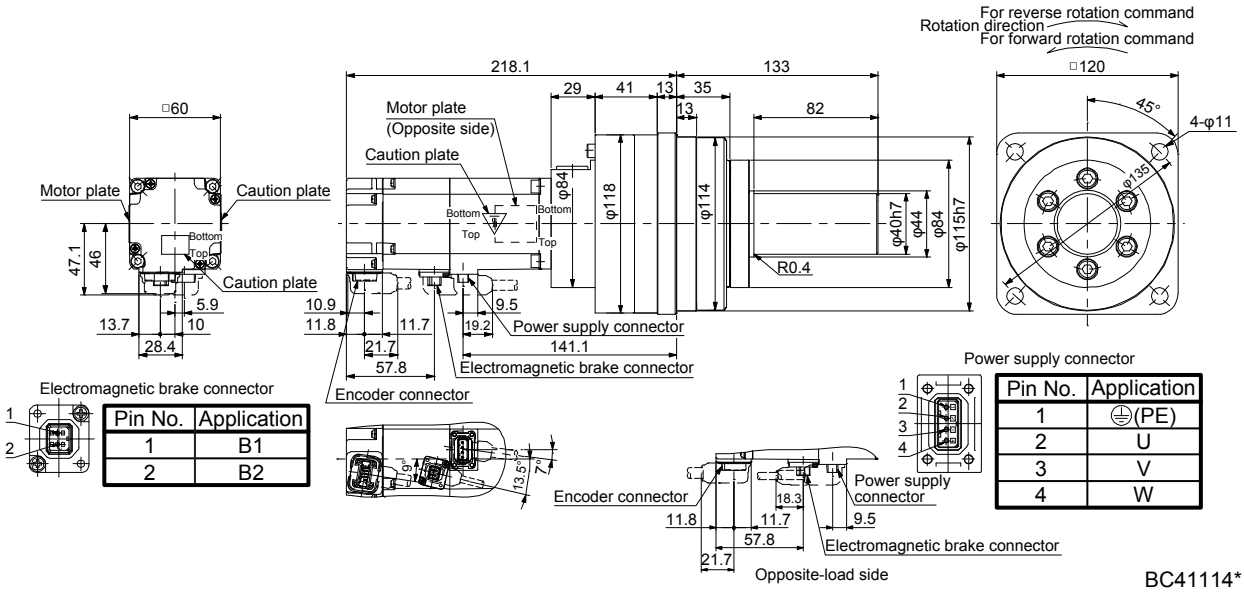

BC41114*

Model	Output [W]	Reducer model	Reduction ratio	Brake static friction torque [N•m]	Moment of inertia J [× 10^{-4} kg•m^2]	Mass [kg]
HG-KR73BG7	750	HPG-20A-05-J2FEOS-S	1/5	2.4	2.06	6.2
HG-KR73BG7	750	HPG-20A-11-J2FEPS-S	1/11	2.4	1.94	6.5

[Unit: mm]

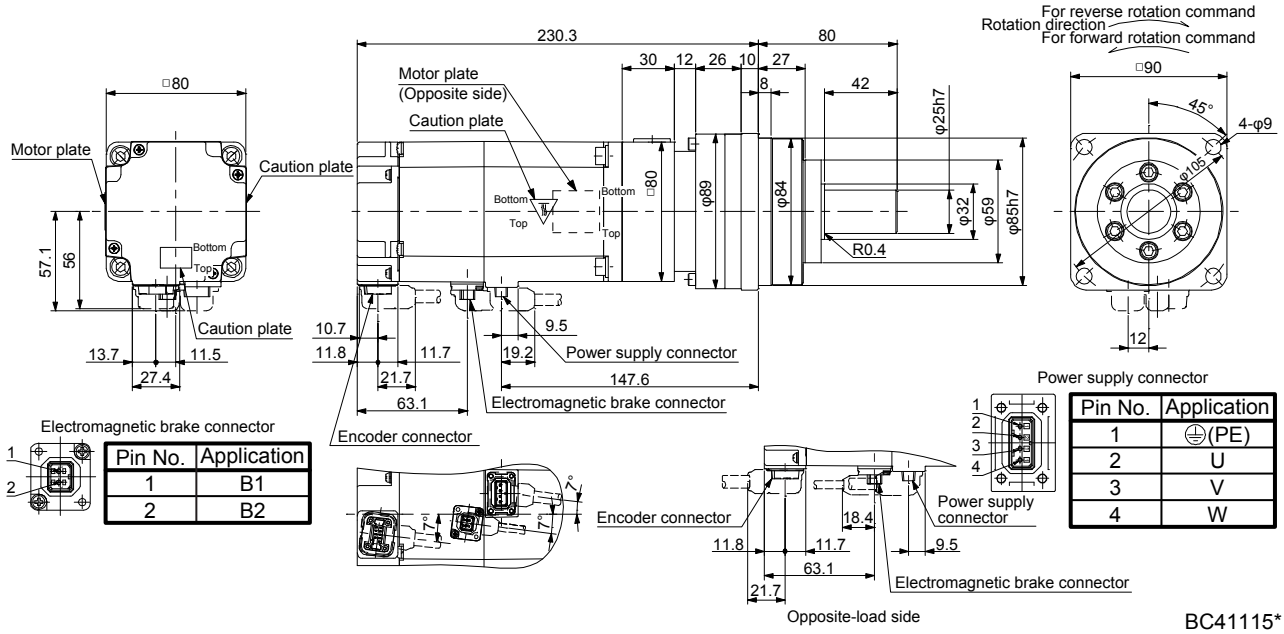

BC41115*

Model	Output [W]	Reducer model	Reduction ratio	Brake static friction torque [N•m]	Moment of inertia J [× 10^{-4} kg•m^2]	Mass [kg]
HG-KR73BG7	750	HPG-32A-21-J2SEIS-S	1/21	2.4	2.14	9.6
HG-KR73BG7	750	HPG-32A-33-J2SEJS-S	1/33	2.4	1.91	9.6
HG-KR73BG7	750	HPG-32A-45-J2SEJS-S	1/45	2.4	1.90	9.6

[Unit: mm]

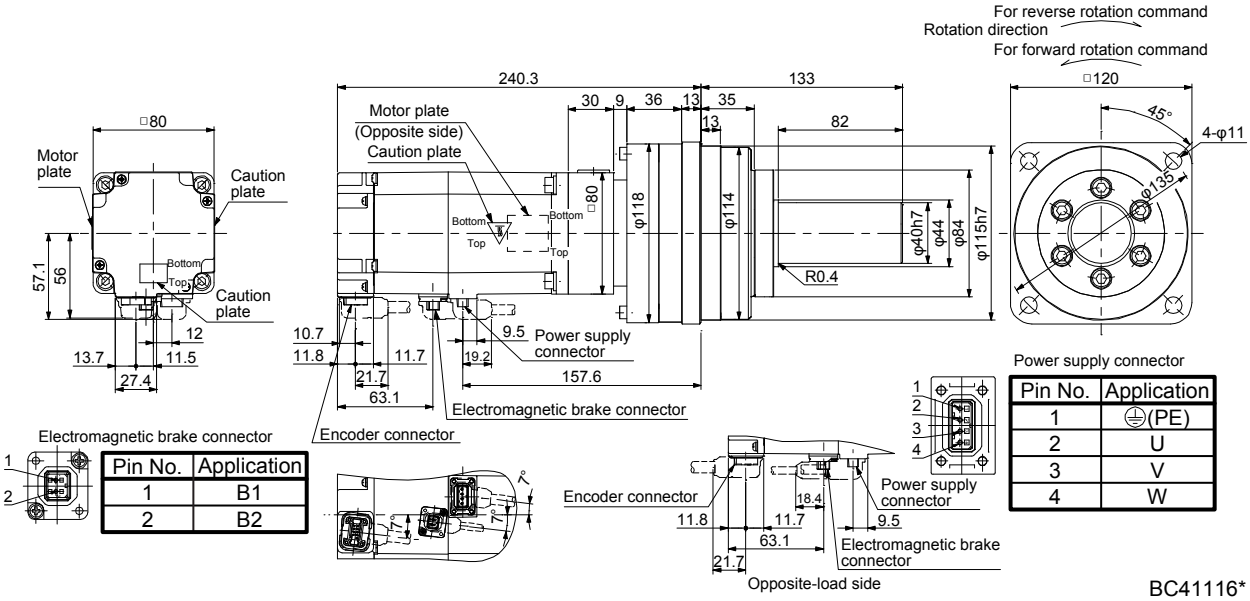

MEMO

7. HG-SR SERIES

This chapter provides information on the servo motor specifications and characteristics. When using the HG-SR series servo motor, always read the Safety Instructions in the beginning of this manual and chapters 1 to 5, in addition to this chapter.

7.1 Model code definition

The following describes what each block of a model name indicates. Not all combinations of the symbols are available.

HG-SR5 2 4 B J G1 K W0 C

Series

Rated output

Symbol	Rated output [kW]	1000 [r/min]	2000 [r/min]
5	0.5	○	○
8	0.85	○	
10	1.0		○
12	1.2	○	
15	1.5		○
20	2.0	○	○
30	3.0	○	
35	3.5		○
42	4.2	○	
50	5.0		○
70	7.0		○

Rated speed

Symbol	Speed [r/min]
1	1000
2	2000

Power supply voltage of servo amplifier

Symbol	Voltage
None	3-phase 200 V AC to 240 V AC
4	3-phase 380 V AC to 480 V AC

Special specification

Symbol	Special specification
None	Standard
(Note 3) W0C	Servo motor with functional safety

Appearance

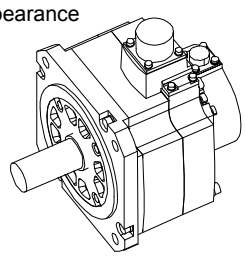

Shaft type

Symbol	Shaft shape
None	Standard (straight shaft)
K	(Note 1) Keyway shaft (with key)

Reducer

Symbol	Reducer
None	None
G1	For general industrial machine (flange-mounting)
G1H	For general industrial machine (foot-mounting)
G5	Flange-mounting flange output type for high precision application
G7	Flange-mounting shaft output type for high precision application

Oil seal

Symbol	Oil seal
None	None
(Note 2) J	With

Electromagnetic brake

Symbol	Electromagnetic brake
None	None
B	With

Note 1. The key is packed only with the geared servo motor of flange mounting shaft-output type for high precision applications.
2. For details, contact your local sales office.
3. Refer to section 1.5 for details.

7.2 Combination list of servo motors and servo amplifiers

(1) Compatible with 3-phase 200 V AC

Servo motor	Servo amplifier	
	MR-J4 1-axis	MR-J4 2-axis
HG-SR51	MR-J4-60A MR-J4-60A-RJ MR-J4-60B MR-J4-60B-RJ MR-J4-60B-RJ010 MR-J4-60B-RJ020 MR-J4-60GF MR-J4-60GF-RJ	MR-J4W2-77B MR-J4W2-1010B
HG-SR81	MR-J4-100A MR-J4-100A-RJ MR-J4-100B MR-J4-100B-RJ MR-J4-100B-RJ010 MR-J4-100B-RJ020 MR-J4-100GF MR-J4-100GF-RJ	MR-J4W2-1010B
HG-SR121	MR-J4-200A MR-J4-200A-RJ MR-J4-200B MR-J4-200B-RJ MR-J4-200B-RJ010 MR-J4-200B-RJ020 MR-J4-200GF MR-J4-200GF-RJ	
HG-SR201		
HG-SR301	MR-J4-350A MR-J4-350A-RJ MR-J4-350B MR-J4-350B-RJ MR-J4-350B-RJ010 MR-J4-350B-RJ020 MR-J4-350GF MR-J4-350GF-RJ	
HG-SR421	MR-J4-500A MR-J4-500A-RJ MR-J4-500B MR-J4-500B-RJ MR-J4-500B-RJ010 MR-J4-500B-RJ020 MR-J4-500GF MR-J4-500GF-RJ	

Servo motor	Servo amplifier	
	MR-J4 1-axis	MR-J4 2-axis
HG-SR52	MR-J4-60A MR-J4-60A-RJ MR-J4-60B MR-J4-60B-RJ MR-J4-60B-RJ010 MR-J4-60B-RJ020 MR-J4-60GF MR-J4-60GF-RJ	MR-J4W2-77B MR-J4W2-1010B
HG-SR102	MR-J4-100A MR-J4-100A-RJ MR-J4-100B MR-J4-100B-RJ MR-J4-100B-RJ010 MR-J4-100B-RJ020 MR-J4-100GF MR-J4-100GF-RJ	MR-J4W2-1010B
HG-SR152	MR-J4-200A MR-J4-200A-RJ MR-J4-200B MR-J4-200B-RJ MR-J4-200B-RJ010 MR-J4-200B-RJ020 MR-J4-200GF MR-J4-200GF-RJ	
HG-SR202		
HG-SR352	MR-J4-350A MR-J4-350A-RJ MR-J4-350B MR-J4-350B-RJ MR-J4-350B-RJ010 MR-J4-350B-RJ020 MR-J4-350GF MR-J4-350GF-RJ	
HG-SR502	MR-J4-500A MR-J4-500A-RJ MR-J4-500B MR-J4-500B-RJ MR-J4-500B-RJ010 MR-J4-500B-RJ020 MR-J4-500GF MR-J4-500GF-RJ	
HG-SR702	MR-J4-700A MR-J4-700A-RJ MR-J4-700B MR-J4-700B-RJ MR-J4-700B-RJ010 MR-J4-700B-RJ020 MR-J4-700GF MR-J4-700GF-RJ	

(2) Compatible with 3-phase 400 V AC

Servo motor	Servo amplifier
HG-SR524	MR-J4-60A4 MR-J4-60A4-RJ MR-J4-60B4 MR-J4-60B4-RJ MR-J4-60B4-RJ010 MR-J4-60B4-RJ020 MR-J4-60GF4 MR-J4-60GF4-RJ
HG-SR1024	MR-J4-100A4 MR-J4-100A4-RJ MR-J4-100B4 MR-J4-100B4-RJ MR-J4-100B4-RJ010 MR-J4-100B4-RJ020 MR-J4-100GF4 MR-J4-100GF4-RJ

Servo motor	Servo amplifier
HG-SR1524	MR-J4-200A4 MR-J4-200A4-RJ MR-J4-200B4 MR-J4-200B4-RJ MR-J4-200B4-RJ010 MR-J4-200B4-RJ020 MR-J4-200GF4 MR-J4-200GF4-RJ
HG-SR2024	
HG-SR3524	MR-J4-350A4 MR-J4-350A4-RJ MR-J4-350B4 MR-J4-350B4-RJ MR-J4-350B4-RJ010 MR-J4-350B4-RJ020 MR-J4-350GF4 MR-J4-350GF4-RJ

Servo motor	Servo amplifier
HG-SR5024	MR-J4-500A4 MR-J4-500A4-RJ MR-J4-500B4 MR-J4-500B4-RJ MR-J4-500B4-RJ010 MR-J4-500B4-RJ020 MR-J4-500GF4 MR-J4-500GF4-RJ
HG-SR7024	MR-J4-700A4 MR-J4-700A4-RJ MR-J4-700B4 MR-J4-700B4-RJ MR-J4-700B4-RJ010 MR-J4-700B4-RJ020 MR-J4-700GF4 MR-J4-700GF4-RJ

7.3 Standard specifications

7.3.1 Standard specifications list

Servo motor / Item			HG-SR 1000 r/min series (Compatible with 3-phase 200 V AC, medium inertia/medium capacity)						HG-SR 2000 r/min series (Compatible with 3-phase 200 V AC, medium inertia/medium capacity)						
			51(B)	81(B)	121 (B)	201 (B)	301 (B)	421 (B)	52(B)	102 (B)	152 (B)	202 (B)	352 (B)	502 (B)	702 (B)
Power supply capacity			Refer to "Power supply equipment capacity and generated loss of servo amplifiers" in Servo Amplifier Instruction Manual.												
Continuous running duty (Note 1)	Rated output	[kW]	0.5	0.85	1.2	2.0	3.0	4.2	0.5	1.0	1.5	2.0	3.5	5.0	7.0
	Rated torque	[N•m]	4.8	8.1	11.5	19.1	28.6	40.1	2.4	4.8	7.2	9.5	16.7	23.9	33.4
Maximum torque (Note 10)		[N•m]	14.3	24.4	34.4	57.3	85.9	120	7.2	14.3	21.5	28.6	50.1	71.6	100
Rated speed (Note 1)		[r/min]	1000						2000						
Maximum speed (Note 10)		[r/min]	1500						3000						
Instantaneous permissible speed (Note 10)		[r/min]	1725						3450						
Power rate at continuous rated torque	Standard	[kW/s]	19.7	41.2	28.1	46.4	82.3	107	7.85	19.7	32.1	19.5	35.5	57.2	74.0
	With an electromagnetic brake	[kW/s]	16.5	36.2	23.2	41.4	75.3	99.9	6.01	16.5	28.2	16.1	31.7	52.3	69.4
Rated current		[A]	2.8	5.2	7.1	9.4	13	19	2.9	5.6	9.4	9.6	14	22	26
Maximum current		[A]	9.0	17	23	30	42	61	9.0	17	29	31	45	70	83
Moment of inertia J (Note 3)	Standard	[× 10^{-4} kg•m^2]	11.6	16.0	46.8	78.6	99.7	151	7.26	11.6	16.0	46.8	78.6	99.7	151
	With an electromagnetic brake	[× 10^{-4} kg•m^2]	13.8	18.2	56.5	88.2	109	161	9.48	13.8	18.2	56.5	88.2	109	161
Recommended load to motor inertia ratio (Note 2, 10)			17 times or less		15 times or less				17 times or less			15 times or less			
Speed/position detector			22-bit encoder common to absolute position/incremental systems (resolution per servo motor revolution: 4194304 pulses/rev)												
Oil seal			None (Note 11)												
Insulation class			155 (F)												
Structure			Totally-enclosed, natural-cooling (IP rating: IP67 (Note 4, 9))												
Environment (Note 5)	Ambient temperature	Operation	0 °C to 40 °C (non-freezing)												
		Storage	-15 °C to 70 °C (non-freezing)												
	Ambient humidity	Operation	80 %RH or less (non-condensing)												
		Storage	90 %RH or less (non-condensing)												
	Ambience		Indoors (no direct sunlight), free from corrosive gas, flammable gas, oil mist, dust, and dirt												
	Altitude		Max. 2000 m above sea level (Note 12)												
	Vibration resistance (Note 6)		X, Y: 24.5 m/s^2		X: 24.5 m/s^2 Y: 49 m/s^2		X: 24.5 m/s^2 Y: 29.4 m/s^2		X, Y: 24.5 m/s^2			X: 24.5 m/s^2 Y: 49 m/s^2		X: 24.5 m/s^2 Y: 29.4 m/s^2	
Vibration rank (Note 7)			V10												
Permissible load for the shaft (Note 8)	L	[mm]	55		79				55			79			
	Radial	[N]	980		2058				980			2058			
	Thrust	[N]	490		980				490			980			
Mass (Note 3)	Standard	[kg]	6.2	7.3	11	16	20	27	4.8	6.2	7.3	11	16	20	27
	With an electromagnetic brake	[kg]	8.2	9.3	17	22	26	33	6.7	8.2	9.3	17	22	26	33

Item \ Servo motor			HG-SR series (3-phase 400 V AC compatible, medium inertia/medium capacity)						
			524(B)	1024(B)	1524(B)	2024(B)	3524(B)	5024(B)	7024(B)
Power supply capacity			Refer to "Power supply equipment capacity and generated loss of servo amplifiers" in Servo Amplifier Instruction Manual.						
Continuous running duty (Note 1)	Rated output [kW]		0.5	1.0	1.5	2.0	3.5	5.0	7.0
	Rated torque [N•m]		2.4	4.8	7.2	9.5	16.7	23.9	33.4
Maximum torque (Note 10) [N•m]			7.2	14.3	21.5	28.6	50.1	71.6	100
Rated speed (Note 1) [r/min]			2000						
Maximum speed (Note 10) [r/min]			3000						
Instantaneous permissible speed (Note 10) [r/min]			3450						
Power rate at continuous rated torque	Standard [kW/s]		7.85	19.7	32.1	19.5	35.5	57.2	74.0
	With an electromagnetic brake [kW/s]		6.01	16.5	28.2	16.1	31.7	52.3	69.4
Rated current [A]			1.5	2.8	4.7	4.9	7.0	11	13
Maximum current [A]			4.5	8.9	17	17	27	42	59
Moment of inertia J (Note 3)	Standard [× 10^{-4} kg•m^2]		7.26	11.6	16.0	46.8	78.6	99.7	151
	With an electromagnetic brake [× 10^{-4} kg•m^2]		9.48	13.8	18.2	56.5	88.2	109	161
Recommended load to motor inertia ratio (Note 2, 10)			15 times or less	17 times or less		15 times or less			
Speed/position detector			22-bit encoder common to absolute position/incremental (resolution per servo motor revolution: 4194304 pulses/rev)						
Oil seal			None (Note 11)						
Insulation class			155 (F)						
Structure			Totally-enclosed, natural-cooling (IP rating: IP67 (Note 4, 9))						
Environment (Note 5)	Ambient temperature	Operation	0 ˚C to 40 ˚C (non-freezing)						
		Storage	-15 ˚C to 70 ˚C (non-freezing)						
	Ambient humidity	Operation	80 %RH or less (non-condensing)						
		Storage	90 %RH or less (non-condensing)						
	Ambience		Indoors (no direct sunlight), free from corrosive gas, flammable gas, oil mist, dust, and dirt						
	Altitude		2000 m or less above sea level (Note 12)						
	Vibration resistance (Note 6)		X, Y: 24.5 m/s^2			X: 24.5 m/s^2 Y: 49 m/s^2		X: 24.5 m/s^2 Y: 29.4 m/s^2	
Vibration rank (Note 7)			V10						
Permissible load for the shaft (Note 8)	L [mm]		55			79			
	Radial [N]		980			2058			
	Thrust [N]		490			980			
Mass (Note 3)	Standard [kg]		4.8	6.2	7.3	11	16	20	27
	With an electromagnetic brake [kg]		6.7	8.2	9.3	17	22	26	33

Note 1. When the power supply voltage drops, the output and the rated speed cannot be guaranteed.
2. If the load to motor inertia ratio exceeds the indicated value, contact your local sales office.
3. Refer to the dimensions for the geared servo motor.
4. Except for the shaft-through portion. IP classifies the degrees of protection provided against the intrusion of solid objects and water in electrical enclosures.
5. In the environment where the servo motor is exposed to oil mist, oil, or water, the servo motor of the standard specifications may not be usable. Please contact your local sales office.
6. The following figure shows the vibration directions. The value is the one at the part that indicates the maximum value (normally the opposite to load-side bracket). When the servo motor stops, fretting is likely to occur at the bearing. Therefore, suppress the vibration to about half of the permissible value.

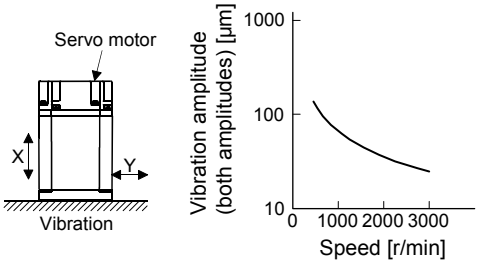

7. V10 indicates that the amplitude of a single servo motor is 10 μm or less. The following figure shows the servo motor mounting position for measurement and the measuring position.

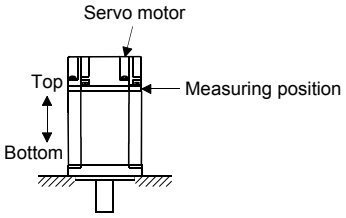

8. The following shows permissible load for the shaft. Do not subject the shaft to load greater than the value in the specifications list. The value assumes that the load is applied independently.

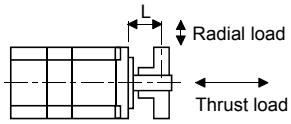

L: Distance from flange mounting surface to load center

9. For the geared servo motor, the reducer area is IP44-equivalent.
10. Refer to section 7.6 for the geared servo motor.
11. The servo motors with an oil seal are also available. For details, contact your local sales office.
12. Follow the restrictions in section 2.10 when using the servo amplifiers at altitude exceeding 1000 m and up to 2000 m above sea level.

7.3.2 Torque characteristics

> **POINT**
>
> ●For the system where the unbalanced torque occurs, such as a vertical axis system, the unbalanced torque of the machine should be kept at 70% or less of the rated torque.

(1) 3-phase 200 V AC

When the power supply input of the servo amplifier is 3-phase 200 V AC or 1-phase 230 V AC, the torque characteristic is indicated by the heavy line. For the 1-phase 200 V AC power supply, part of the torque characteristic is indicated by the thin line. HG-SR51, HGSR81, HG-SR121, HG-SR201, HG-SR52, HG-SR102, HG-SR152, and HG-SR202 support single-phase power supply.

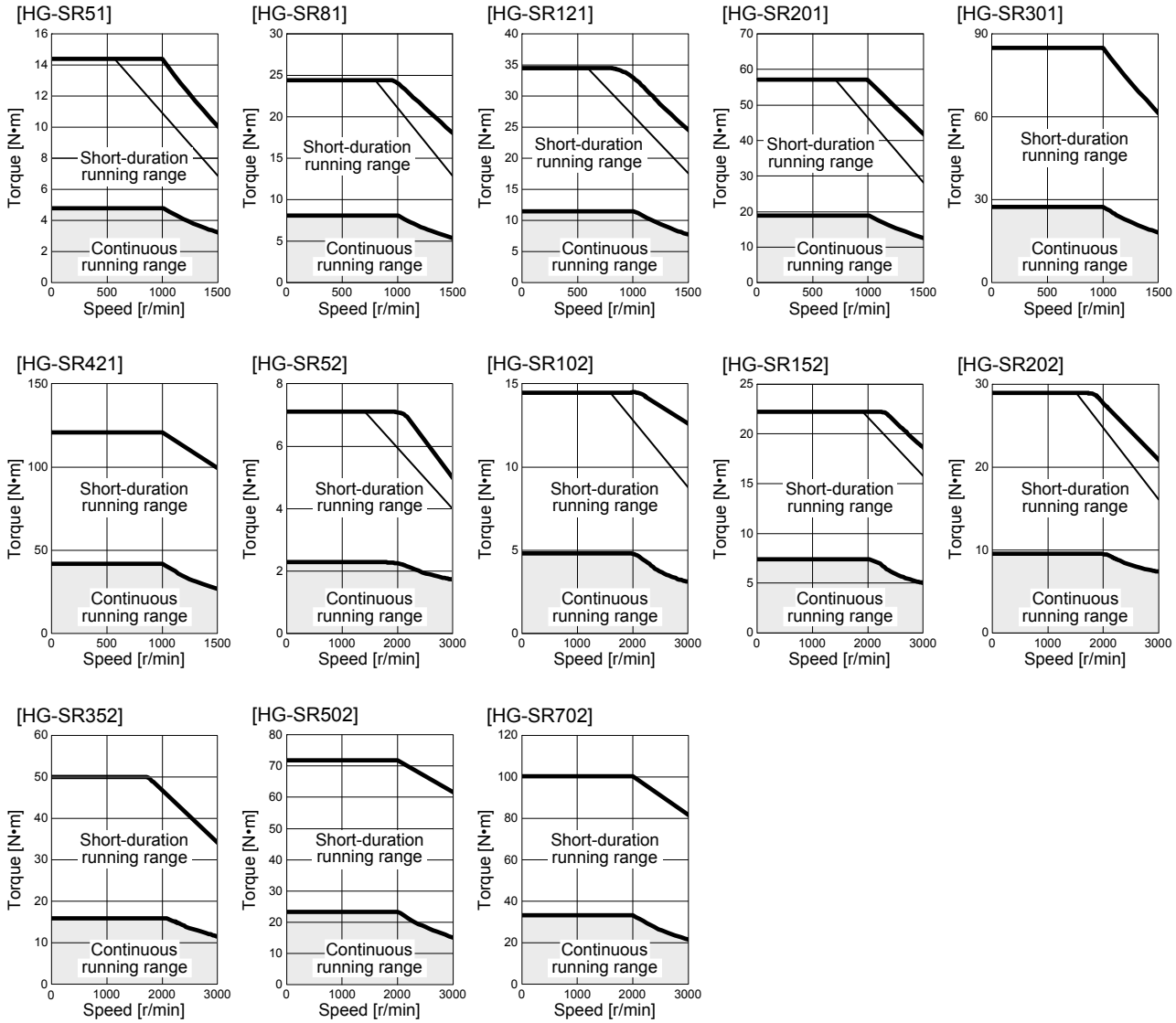

(2) 3-phase 400 V AC

When the power supply input of the servo amplifier are 3-phase 400 V AC, the torque characteristic is indicated by the heavy line. For the 3-phase 380 V AC power supply, part of the torque characteristic is indicated by the thin line.

[HG-SR524]

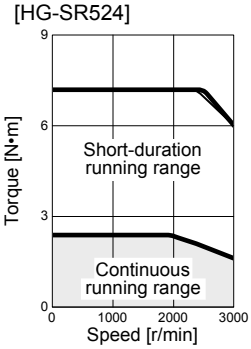

[HG-SR1024]

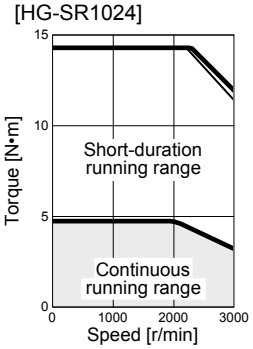

[HG-SR1524]

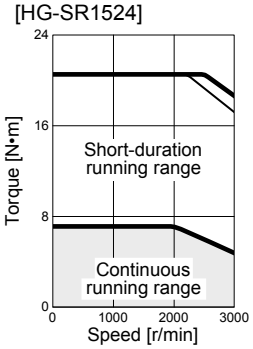

[HG-SR2024]

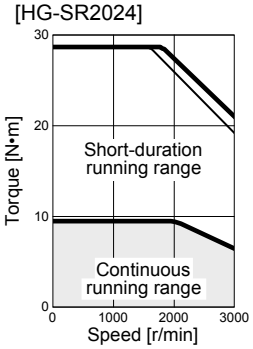

[HG-SR3524]

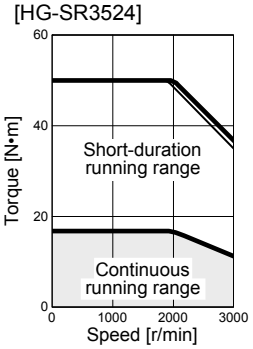

[HG-SR5024]

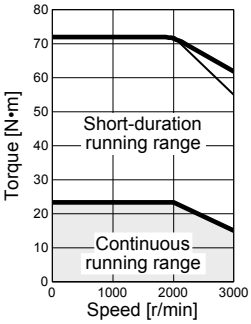

[HG-SR7024]

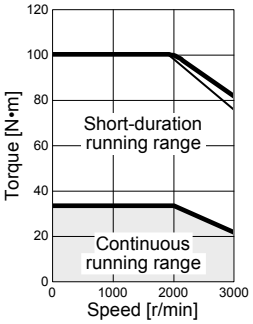

7.4 Electromagnetic brake characteristics

⚠CAUTION	●The electromagnetic brake is provided to prevent a drop at a power failure or servo alarm occurrence during vertical drive or to hold a shaft at a stop. Do not use it for normal braking (including braking at servo-lock). ●Before operating the servo motor, be sure to confirm that the electromagnetic brake operates properly. ●The operation time of the electromagnetic brake differs depending on the power supply circuit you use. Be sure to check the operation delay time with a real machine.

The characteristics of the electromagnetic brake provided for the servo motor with an electromagnetic brake are indicated below.

Item \ Servo motor		HG-SR series	
		51B/81B/52(4)B/ 102(4)B/152(4)B	121B/201B/301B/421B/ 202(4)B/352(4)B/502(4)B/ 702(4)B
Type (Note 1)		Spring actuated type safety brake	
Rated voltage (Note 4)		24 V DC $^{0}_{-10\%}$	
Power consumption [W] at 20 °C		20	34
Coil resistance (Note 6) [Ω]		29.0	16.8
Inductance (Note 6) [H]		0.80	1.10
Brake static friction torque [N•m]		8.5	44
Release delay time (Note 2) [s]		0.04	0.1
Braking delay time (Note 2) [s]	DC off	0.03	0.03
Permissible braking work	Per braking [J]	400	4500
	Per hour [J]	4000	45000
Brake looseness at servo motor shaft (Note 5) [degrees]		0.2 to 0.6	0.2 to 0.6
Brake life (Note 3)	Number of brakings [times]	20000	20000
	Work per braking [J]	200	1000
Selection example of surge absorbers to be used (Note 7, 8)	For the suppressed voltage 125 V	TND20V-680KB	
	For the suppressed voltage 350 V	TND10V-221KB	

Note 1. There is no manual release mechanism. When it is necessary to hand-turn the servo motor shaft for machine centering, etc., use a separate 24 V DC power supply to release the brake electrically.
2. The value for initial on gap at 20 °C.
3. The brake gap will increase as the brake lining wears, but the gap is not adjustable.
The brake life indicated is the number of braking cycles after which adjustment will be required.
4. Always prepare a power supply exclusively used for the electromagnetic brake.
5. These are design values. These are not guaranteed values.
6. These are measured values. These are not guaranteed values.
7. Select the electromagnetic brake control relay properly, considering the characteristics of the electromagnetic brake and surge absorber. When you use a diode for a surge absorber, the electromagnetic braking time will be longer.
8. Manufactured by Nippon Chemi-Con Corporation.

7.5 Servo motors with special shafts

The servo motors with special shafts indicated by the symbol (K) in the table are available. K is the symbol attached to the servo motor model names.

Servo motor	Shaft shape
	Key shaft (without key)
HG-SR_(B)K	K

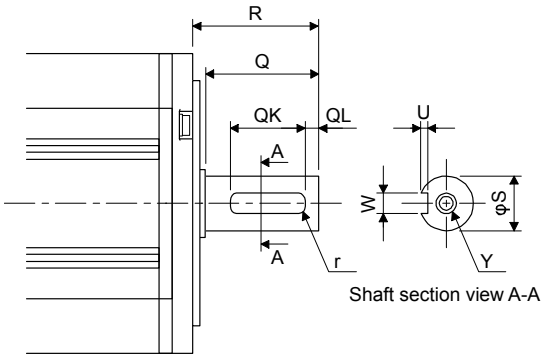

Key shaft (without key)

Variable dimension table

[Unit: mm]

Servo motor	Variable dimensions								
	S	R	Q	W	QK	QL	U	r	Y
HG-SR51(B)K HG-SR81(B)K HG-SR52(4)(B)K HG-SR102(4)(B)K HG-SR152(4)(B)K	24h6	55	50	$8^{0}_{-0.036}$	36	5	$4^{+0.2}_{0}$	4	M8 Screw hole depth 20
HG-SR121(B)K HG-SR201(B)K HG-SR301(B)K HG-SR421(B)K HG-SR202(4)(B)K HG-SR352(4)(B)K HG-SR502(4)(B)K HG-SR702(4)(B)K	$35^{+0.010}_{0}$	79	75	$10^{0}_{-0.036}$	55	5	$5^{+0.2}_{0}$	5	M8 Screw hole depth 20

7.6 Geared servo motors

⚠CAUTION	●Geared servo motors must be mounted in the specified direction. Otherwise, it can leak oil, leading to a fire or malfunction. ●For the geared servo motor, remove the oil before transportation and installation. Tipping over the reducer filled with oil can cause oil leakage.

Servo motors are available with a reducer designed for general industrial machines and high precision applications.
Servo motors with an electromagnetic brake are also available.

7.6.1 For general industrial machines (G1/G1H)

(1) Reduction ratio
The following table indicates the reduction ratios and reducer frame numbers of the geared servo motor for general industrial machines.

Servo motor	Reduction ratio						
	1/6	1/11	1/17	1/29	1/35	1/43	1/59
HG-SR52(4)(B)G1(H)	6100				6120		
HG-SR102(4)(B)G1(H)	6120					6130	6160
HG-SR152(4)(B)G1(H)	6120			6130		6160	
HG-SR202(4)(B)G1(H)	6120			6165			
HG-SR352(4)(B)G1(H)	6135			6165		6175	
HG-SR502(4)(B)G1(H)	6165			6180			6185
HG-SR702(4)(B)G1(H)	6165	6170		6180		6195	

(2) Specifications

Item		Description
Mounting method		Refer to (2) (b) in this section.
Mounting direction		Refer to (2) (b) in this section.
Lubrication method		Refer to (2) (b)/(c) in this section.
	Recommended products (Note 1)	Refer to (2) (c) in this section.
Output shaft rotating direction		Opposite direction to the servo motor output shaft
Backlash (Note 5)		40 minutes to 2 ° at reducer output shaft (Note 4)
Permissible load inertia moment ratio (when converting into the servo motor shaft) (Note 2)		4 times or less
Maximum torque		Three times of the servo motor rated torque
Maximum speed (servo motor shaft)		Refer to (2) (a) in this section.
IP rating (reducer area)		IP44 equivalent
Reducer efficiency (Note 3)		85% to 94%

Note 1. Already packed with grease.
2. If the above indicated value is exceeded, please contact your local sales office.
3. The reducer efficiency differs depending on the reduction ratio. Also, it changes depending on the operating conditions such as the output torque, speed and rotation, temperature, etc. The numerical value in the table is a typical value in the rated torque, rated speed and rotation and typical temperature, and not a guaranteed value.
4. These values are design values and not guaranteed values.
5. The backlash can be converted: 1 min = 0.0167 °

(a) Maximum speed

Servo motor	Reduction ratio						
	1/6	1/11	1/17	1/29	1/35	1/43	1/59
HG-SR52(4)(B)G1(H)							
HG-SR102(4)(B)G1(H)	3000 r/min (permissible instantaneous speed: 3450 r/min)						
HG-SR152(4)(B)G1(H)							
HG-SR202(4)(B)G1(H)							
HG-SR352(4)(B)G1(H)	2000 r/min (permissible instantaneous speed: 2300 r/min)						
HG-SR502(4)(B)G1(H)							
HG-SR702(4)(B)G1(H)							

(b) Lubrication method and mounting direction

Oil lubrication cannot be used in applications where the servo motor will move. Specify grease lubrication.

For grease lubrication, the reducer is already grease-packed. For oil lubrication, pack the reducer with oil on the customer side.

Mounting direction	Shaft any direction		Shaft horizontal		Shaft downward		Shaft upward	
Reducer model / Reducer frame No.	CNHM (Foot-mounting)	CNVM (Flange-mounting)	CHHM (Foot-mounting)	CHVM (Flange-mounting)	CVHM (Foot-mounting)	CVVM (Flange-mounting)	CWHM (Foot-mounting)	CWVM (Flange-mounting)
6100	Grease	Grease						
6120	Grease	Grease						
6130/6135			(Note) Oil	(Note) Oil	(Note) Oil	(Note) Oil	Grease	Grease
6160/6165			(Note) Oil	(Note) Oil	(Note) Oil	(Note) Oil	Grease	Grease
6170/6175			Oil	Oil	Oil	Oil		
6180/6185			Oil	Oil	Oil	Oil		
6195			Oil	Oil	Oil	Oil		

Note. Grease-lubricated type is also available as optional products.

(c) Recommended lubricants

1) Grease

Albania Grease RA (Shell)

2) Lubricating oil

POINT

- For the handling, maintenance, and inspection of the reducer, refer to the instruction manual "Cyclo® 6000" of Sumitomo Heavy Industries, Ltd. packed with the product or check their website.
- Since the oil-lubricated models are shipped without oil, make sure to fill oil up to the upper red line of the oil gauge before operation.

Ambient temperature [°C]	COSMO OIL	JX Nippon Oil & Energy	Idemitsu Kosan	Shell	Esso	Exxon Mobil	Japan Energy
-10 to 5	COSMO GEAR SE68	BONNOC M68 DIAMOND GEAR LUBE SP68	DAPHNE SUPER GEAR OIL 68	Omala Oils 68	SPARTAN EP68	Mobilgear 626 (ISOVG68)	JOMO Reductus 68
0 to 35	COSMO GEAR SE100/150	BONNOC M100/150 DIAMOND GEAR LUBE SP100/150	DAPHNE SUPER GEAR OIL 100/150	Omala Oils 100/150	SPARTAN EP100/150	Mobilgear 627/629 (ISOVG100/150)	JOMO Reductus 100/150
30 to 50	COSMO GEAR SE200/320/460	BONNOC M200 to 460 DIAMOND GEAR LUBE SP220 to 460		Omala Oils 200 to 460	SPARTAN EP220 to 460	Mobilgear 630 to 634 (ISOVG220 to 460)	JOMO Reductus 200 to 460

Lubricating oil fill amount

Reducer frame No.	Fill amount [L]	
	Horizontal type	Vertical type
6130/6135	0.7	1.1
6160/6165	1.4	1.0
6170/6175	1.9	1.9
6180/6185	2.5	2.0
6195	4.0	2.7

(d) Changing intervals

1) Grease

Maintenance-free. (Limited to the case where the grease-lubricated type is standard)

2) Lubricating oil

Changing intervals	Operation hours per day	
	Less than 10 hours	10 hours to 24 hours
First time	500 hours	
Second time and later	Half year	2500 hours

(3) Permissible loads of servo motor shaft

The permissible radial load in the table is the value measured at the center of the reducer output shaft.

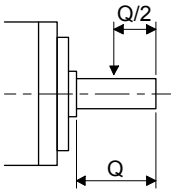

Q: Length of axis (Refer to section 7.7.3 to 7.7.6.)

Servo motor	Reduction ratio	Reducer frame No.	Permissible load (Note)	
			Permissible radial load [N]	Permissible thrust load [N]
HG-SR52(4)(B)G1(H)	1/6	6100	2058	1470
	1/11		2391	1470
	1/17		2832	1470
	1/29		3273	1470
	1/35	6120	5253	2940
	1/43		5253	2940
	1/59		5880	2940
HG-SR102(4)(B)G1(H)	1/6	6120	2842	2352
	1/11		3273	2764
	1/17		3646	2940
	1/29		4410	2940
	1/35		5253	2940
	1/43	6130	6047	3920
	1/59	6160	9741	6860
HG-SR152(4)(B)G1(H)	1/6	6120	2842	2352
	1/11		3273	2764
	1/17		3646	2940
	1/29	6130	5135	3920
	1/35		6047	3920
	1/43	6160	8555	6860
	1/59		9741	6860
HG-SR202(4)(B)G1(H)	1/6	6120	2842	2352
	1/11		3273	2764
	1/17		3646	2940
	1/29	6165	7291	6860
	1/35		8555	6860
	1/43		8555	6860
	1/59		9741	6860

Servo motor	Reduction ratio	Reducer frame No.	Permissible load (Note)	
			Permissible radial load [N]	Permissible thrust load [N]
HG-SR352(4)(B)G1(H)	1/6	6135	3332	3920
	1/11		3871	3920
	1/17		4420	3920
	1/29	6165	7291	6860
	1/35		8555	6860
	1/43	6175	11662	9800
	1/59		13132	9800
HG-SR502(4)(B)G1(H)	1/6	6165	5448	5000
	1/11		5488	6292
	1/17		6468	6860
	1/29	6180	13426	13720
	1/35		16072	13720
	1/43		16072	13720
	1/59	6185	16072	13720
HG-SR702(4)(B)G1(H)	1/6	6165	7526	5000
	1/11	6170	7526	8085
	1/17		8683	9673
	1/29	6180	13426	13720
	1/35		16072	13720
	1/43	6195	22540	19600
	1/59		22540	19600

Note. Do not subject the shaft to load greater than the value.
The value in the table assumes that the load is applied independently.

7.6.2 For high precision applications (G5/G7)

(1) Reduction ratio

The symbols (20A, 30A, 50A) in the following table indicate the model numbers of the reducers assembled to the servo motors. Geared servo motors having the indicated reducer model numbers are available. The reducer model number indicates _ _ _ of the reducer model HPG-_ _ _-05.

Servo motor	Reduction ratio				
	1/5	1/11	1/21	1/33	1/45
HG-SR52(4)(B)G5 HG-SR52(4)(B)G7	20A		32A		
HG-SR102(4)(B)G5 HG-SR102(4)(B)G7	20A	32A		50A	
HG-SR152(4)(B)G5 HG-SR152(4)(B)G7	20A	32A	50A		
HG-SR202(4)(B)G5 HG-SR202(4)(B)G7	32A		50A		
HG-SR352(4)(B)G5 HG-SR352(4)(B)G7	32A	50A			
HG-SR502(4)(B)G5 HG-SR502(4)(B)G7	50A				
HG-SR702(4)(B)G5 HG-SR702(4)(B)G7	50A				

(2) Specifications

Item		Description
Mounting method		Flange mounting
Mounting direction		In any directions
Lubrication method		Grease lubrication (already packed)
	Packed with	Reducer model number 20A, 32A: Harmonic grease SK-2 (Harmonic Drive Systems) Reducer model number 50A: Epiknock grease AP(N)2 (JX Nippon Oil & Energy)
Output shaft rotating direction		Same as the servo motor output shaft direction.
Backlash (Note 3)		3 minutes or less at reducer output shaft
Permissible load to motor inertia ratio (when converting into the servo motor shaft) (Note 1)		10 times or less
Maximum torque		Three times of the servo motor rated torque
Maximum speed (servo motor shaft)		3000 r/min (permissible instantaneous speed: 3450 r/min)
IP rating (reducer area)		IP44 equivalent
Reducer efficiency (Note 2)		77% to 92%

Note 1. If the above indicated value is exceeded, please contact your local sales office.
2. The reducer efficiency differs depending on the reduction ratio. Also, it changes depending on the operating conditions such as the output torque, speed and rotation, temperature, etc. The numerical value in the table is a typical value in the rated torque, rated speed and rotation and typical temperature, and not a guaranteed value.
3. The backlash can be converted: 1 min = 0.0167 °

(3) Permissible loads of servo motor shaft

The radial load point of a high precision reducer is as shown below.

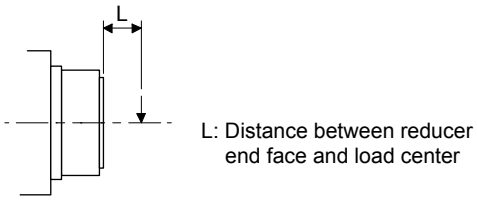

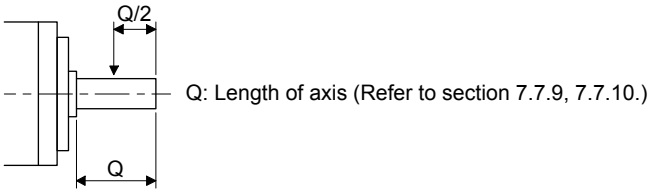

Flange-mounting flange output type for high precision application (G5)

Flange-mounting shaft output type for high precision application (G7)

Servo motor	Reduction ratio	Reducer model number	Radial load point L [mm]	Permissible load (Note)	
				Permissible radial load [N]	Permissible thrust load [N]
HG-SR52(4)(B)G5 HG-SR52(4)(B)G7	1/5	20A	32	416	1465
	1/11		32	527	1856
	1/21	32A	57	1094	4359
	1/33		57	1252	4992
	1/45		57	1374	5478
HG-SR102(4)(B)G5 HG-SR102(4)(B)G7	1/5	20A	32	416	1465
	1/11	32A	57	901	3590
	1/21		57	1094	4359
	1/33	50A	62	2929	10130
	1/45		62	3215	11117
HG-SR152(4)(B)G5 HG-SR152(4)(B)G7	1/5	20A	32	416	1465
	1/11	32A	57	901	3590
	1/21	50A	62	2558	8845
	1/33		62	2929	10130
	1/45		62	3215	11117
HG-SR202(4)(B)G5 HG-SR202(4)(B)G7	1/5	32A	57	711	2834
	1/11		57	901	3590
	1/21	50A	62	2558	8845
	1/33		62	2929	10130
	1/45		62	3215	11117
HG-SR352(4)(B)G5 HG-SR352(4)(B)G7	1/5	32A	57	711	2834
	1/11	50A	62	2107	7285
	1/21		62	2558	8845
HG-SR502(4)(B)G5 HG-SR502(4)(B)G7	1/5	50A	62	1663	5751
	1/11		62	2107	7285
HG-SR702(4)(B)G5 HG-SR702(4)(B)G7	1/5	50A	62	1663	5751

Note. Do not subject the shaft to load greater than the value.
The value in the table assumes that the load is applied independently.

(4) Servo motor with special shaft

Servo motors with special shafts having keyway (with single pointed keys) are available for the flange-mounting shaft output type for high precision applications (G7).

[Unit: mm]

Servo motor	Reducer model number	Q	φS	W	T	QK	U	Y
HG-SR_(4)(B)G7K	20A	42	25h7	8	7	36	4	M6 screw hole depth 12
	32A	82	40h7	12	8	70	5	M10 screw hole depth 20
	50A	82	50h7	14	9	70	5.5	

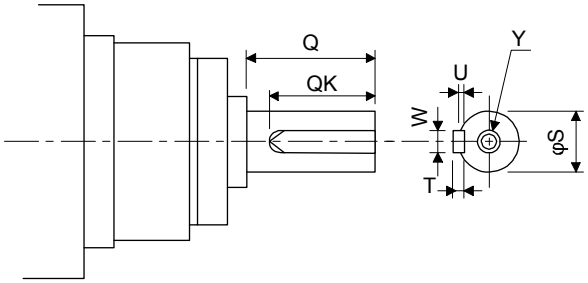

7.7 Dimensions

Moment of inertia on the table is the value calculated by converting the total value of moment of inertia for servo motor, reducer, and electromagnetic brake with servo motor shaft.
The dimensions without tolerances are general tolerance.
The outer frame of the reducer is a material surface such as casting. Its actual dimensions may be 1 mm to 3 mm larger than the drawing dimensions. Design the machine-side with allowances.

7.7.1 Standard (without electromagnetic brake and reducer)

Model	Output [kW]	Moment of inertia J [× 10^{-4} kg•m^2]	Mass [kg]
HG-SR52 HG-SR524	0.5	7.26	4.8

[Unit: mm]

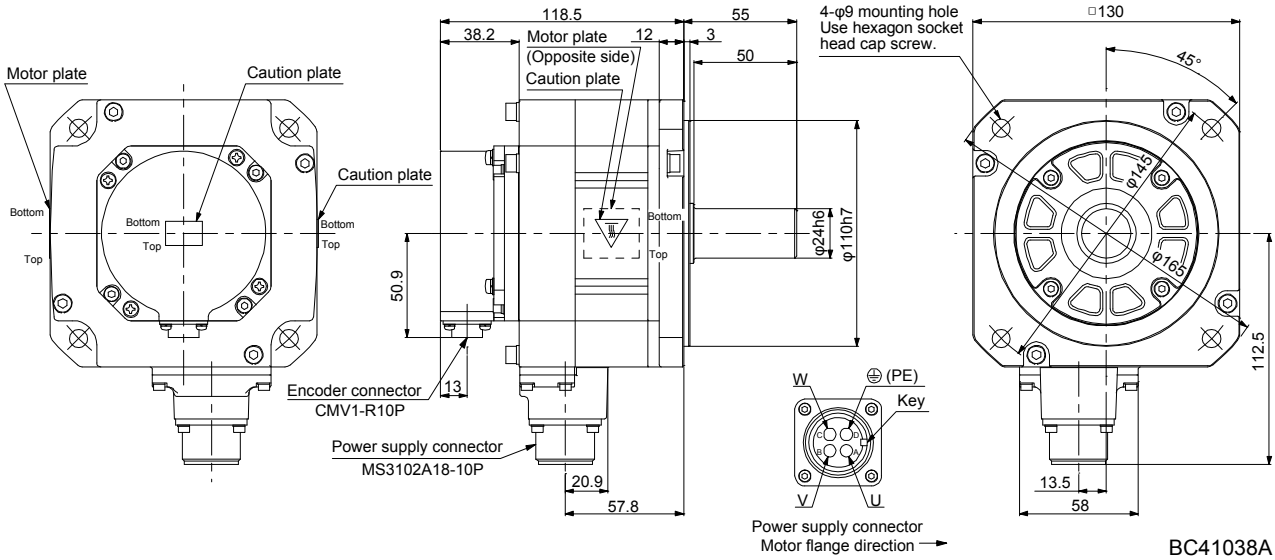

BC41038A

Model	Output [kW]	Moment of inertia J [× 10^{-4} kg•m^2]	Mass [kg]
HG-SR51	0.5	11.6	6.2
HG-SR102 HG-SR1024	1.0		

[Unit: mm]

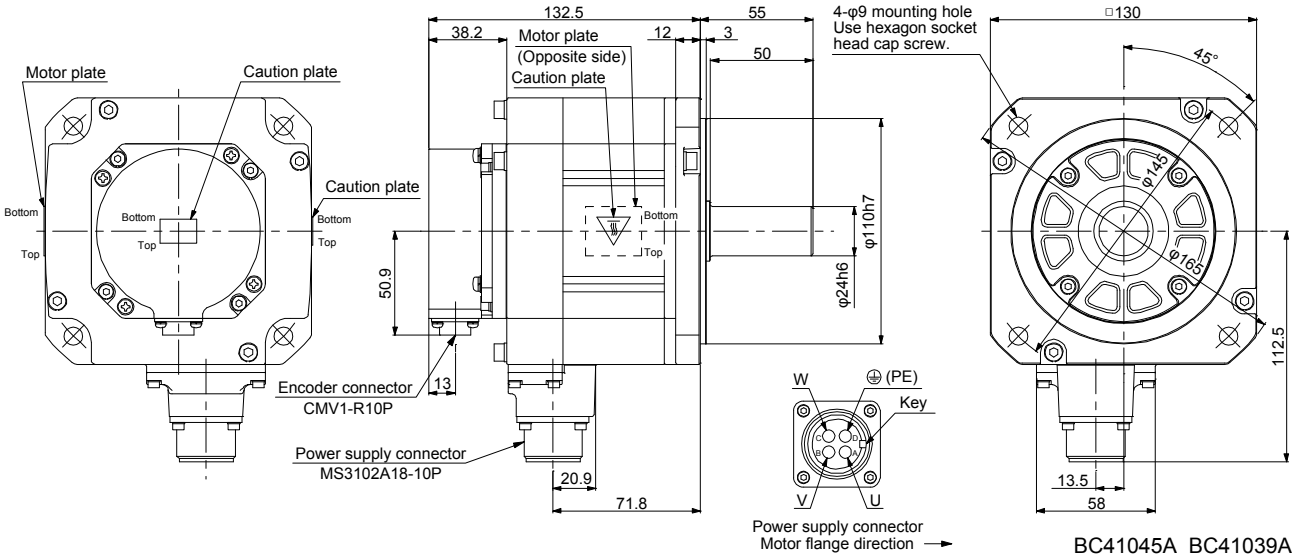

BC41045A BC41039A

Model	Output [kW]	Moment of inertia J [× 10^{-4} kg•m^2]	Mass [kg]
HG-SR81	0.85	16.0	7.3
HG-SR152 HG-SR1524	1.5		

[Unit: mm]

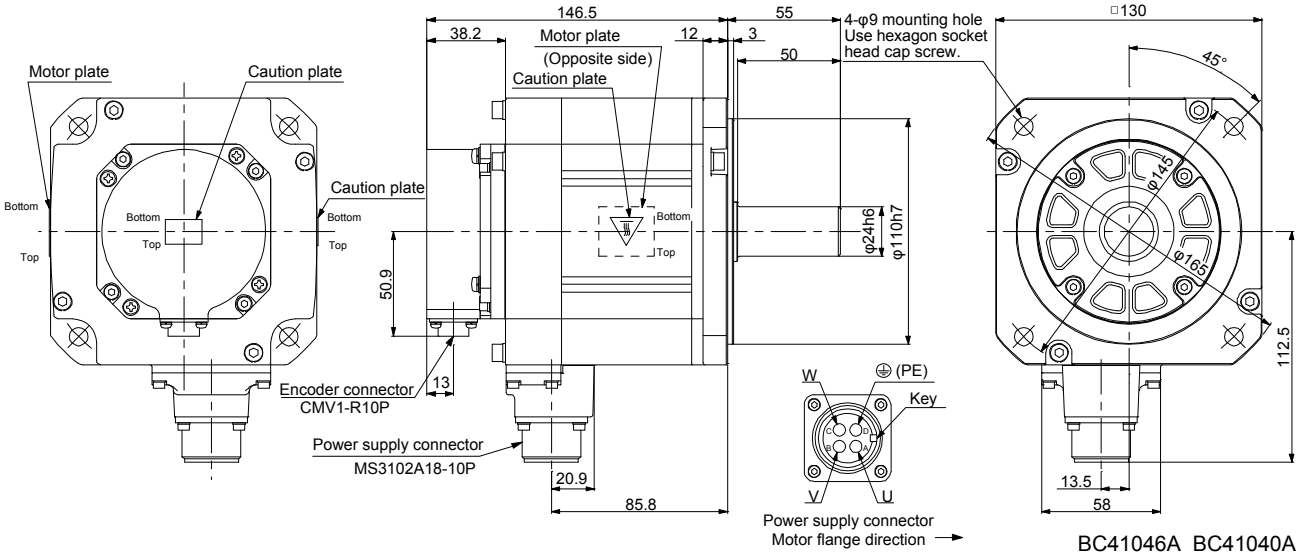

BC41046A BC41040A

Model	Output [kW]	Moment of inertia J [× 10^{-4} kg•m^2]	Mass [kg]
HG-SR121	1.2	46.8	11
HG-SR202 HG-SR2024	2.0		

[Unit: mm]

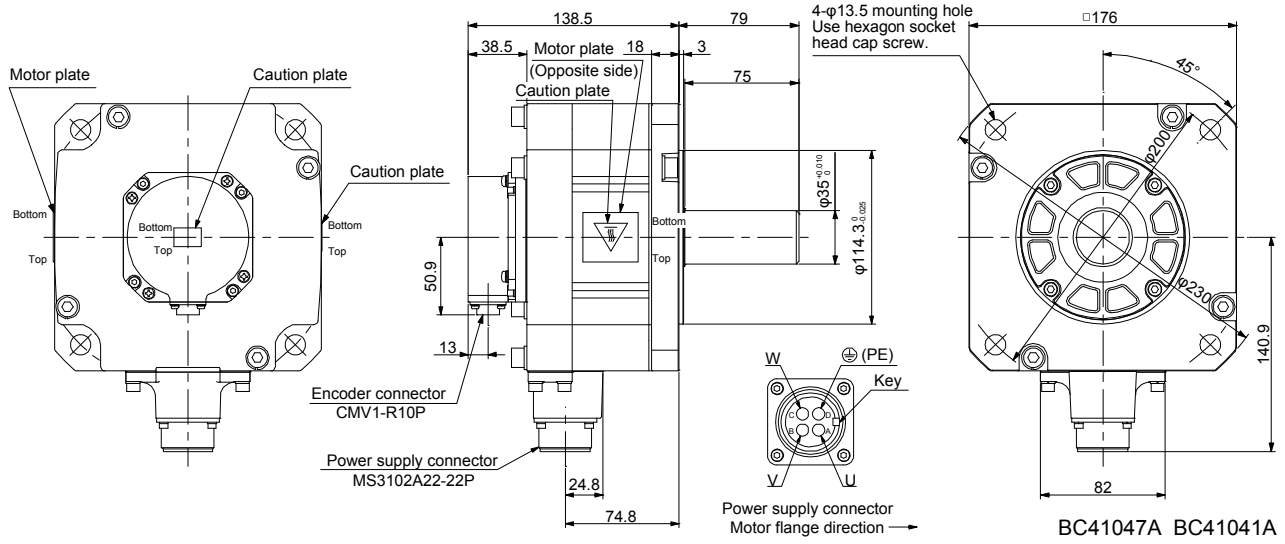

BC41047A BC41041A

Model	Output [kW]	Moment of inertia J [× 10^{-4} kg•m^2]	Mass [kg]
HG-SR201	2.0	78.6	16
HG-SR352 HG-SR3524	3.5		

[Unit: mm]

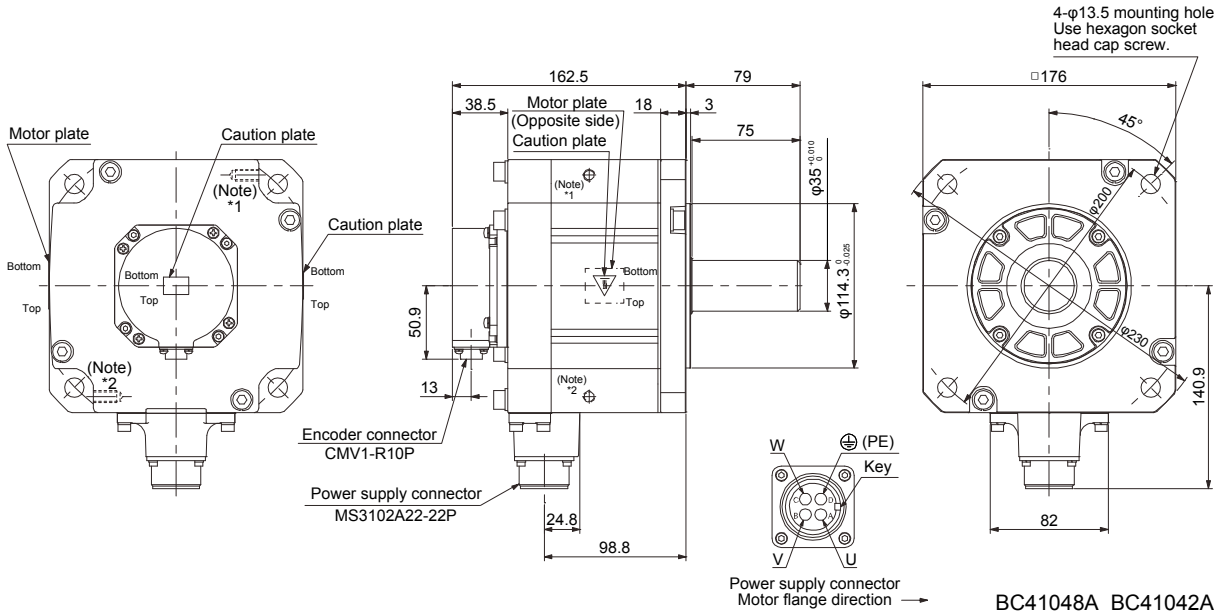

BC41048A BC41042A

Note. *1 and *2 are screw hole for eyebolt (M8).

Model	Output [kW]	Moment of inertia J [× 10^{-4} kg•m^2]	Mass [kg]
HG-SR301	3.0	99.7	20
HG-SR502 HG-SR5024	5.0		

[Unit: mm]

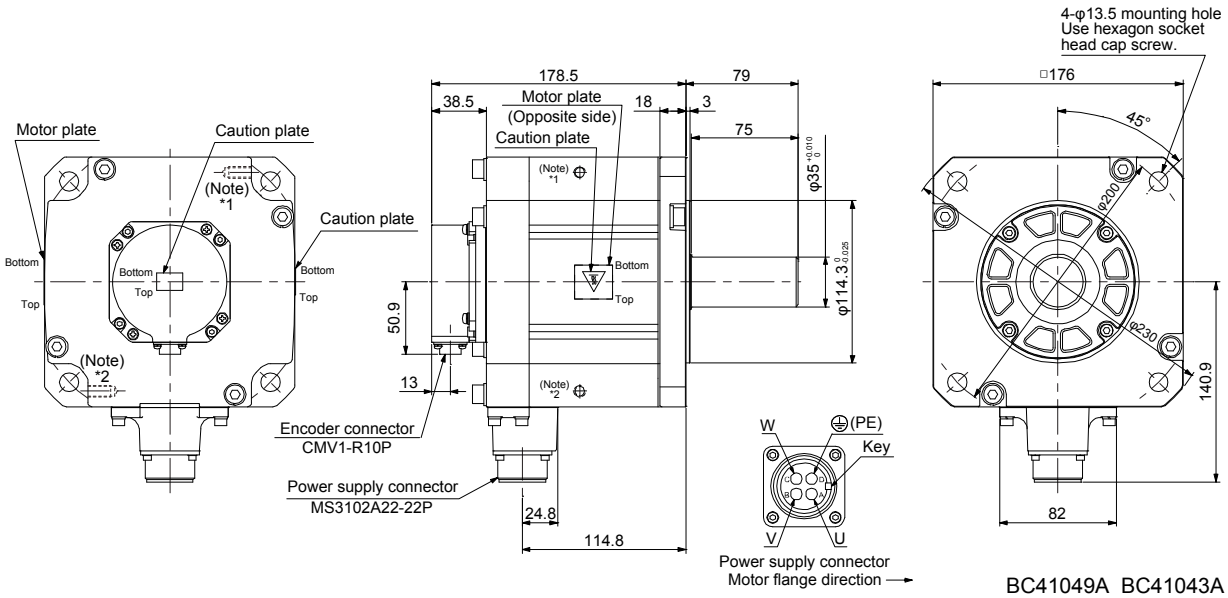

BC41049A BC41043A

Note. *1 and *2 are screw hole for eyebolt (M8).

Model	Output [kW]	Moment of inertia J [× 10^{-4} kg•m^2]	Mass [kg]
HG-SR421	4.2	151	27
HG-SR702 HG-SR7024	7.0		

[Unit: mm]

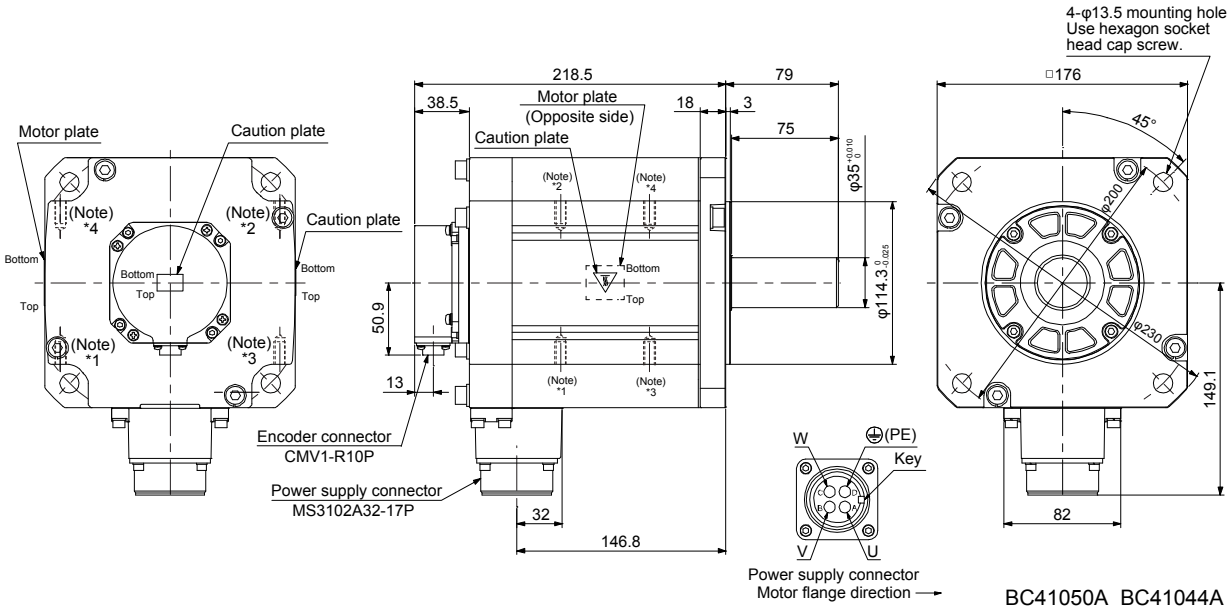

Note. *1, *2, *3, and *4 are screw hole for eyebolt (M8).

7.7.2 With an electromagnetic brake

Model	Output [kW]	Brake static friction torque [N•m]	Moment of inertia J [× 10^{-4} kg•m^2]	Mass [kg]
HG-SR52B HG-SR524B	0.5	8.5	9.48	6.7

[Unit: mm]

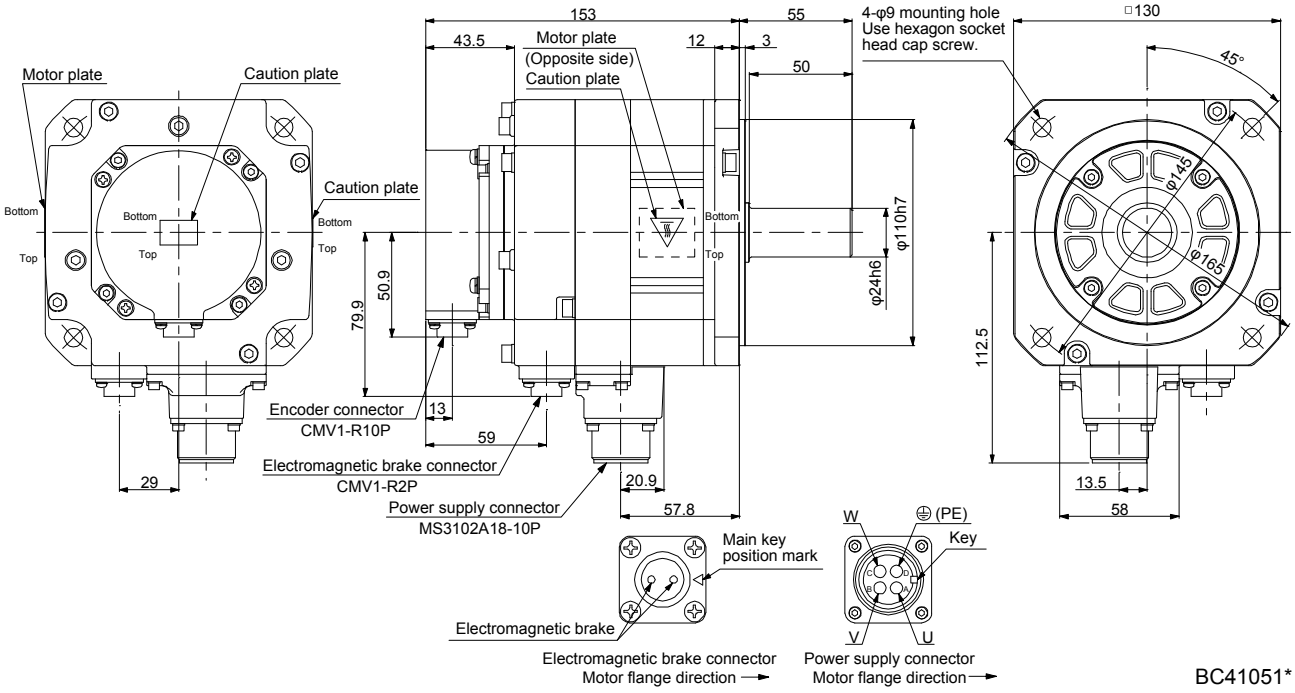

Model	Output [kW]	Brake static friction torque [N•m]	Moment of inertia J [× 10^{-4} kg•m^2]	Mass [kg]
HG-SR51B	0.5	8.5	13.8	8.2
HG-SR102B HG-SR1024B	1.0			

[Unit: mm]

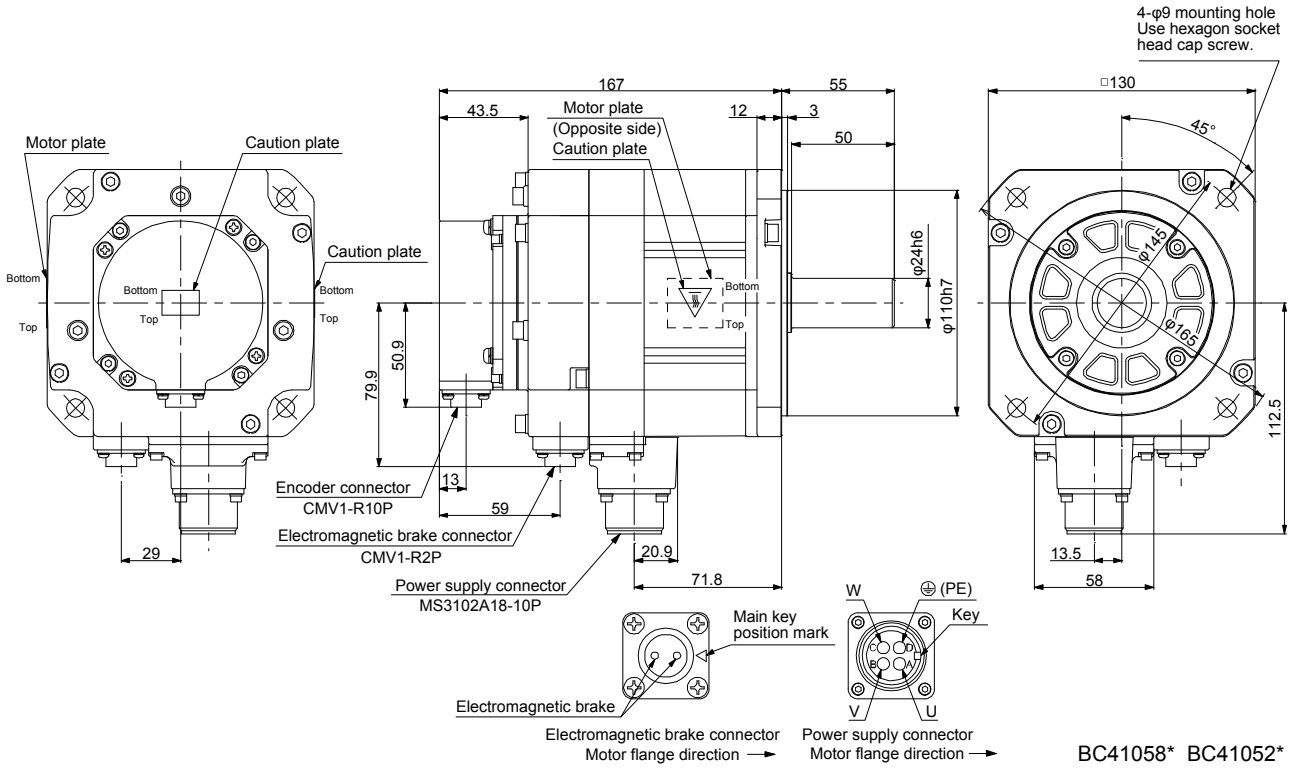

Model	Output [kW]	Brake static friction torque [N•m]	Moment of inertia J [× 10^{-4} kg•m^2]	Mass [kg]
HG-SR81B	0.85	8.5	18.2	9.3
HG-SR152B HG-SR1524B	1.5			

[Unit: mm]

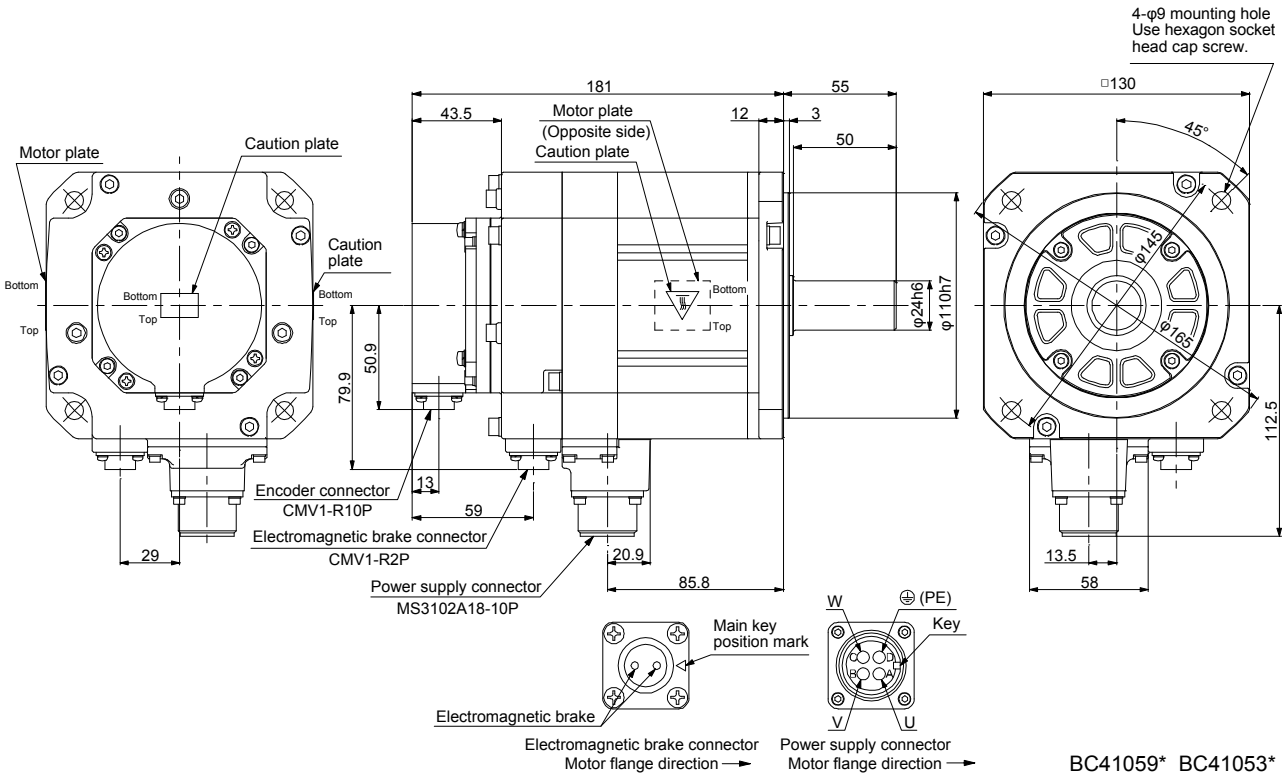

BC41059* BC41053*

Model	Output [kW]	Brake static friction torque [N•m]	Moment of inertia J [× 10^{-4} kg•m^2]	Mass [kg]
HG-SR121B	1.2	44	56.5	17
HG-SR202B HG-SR2024B	2.0			

[Unit: mm]

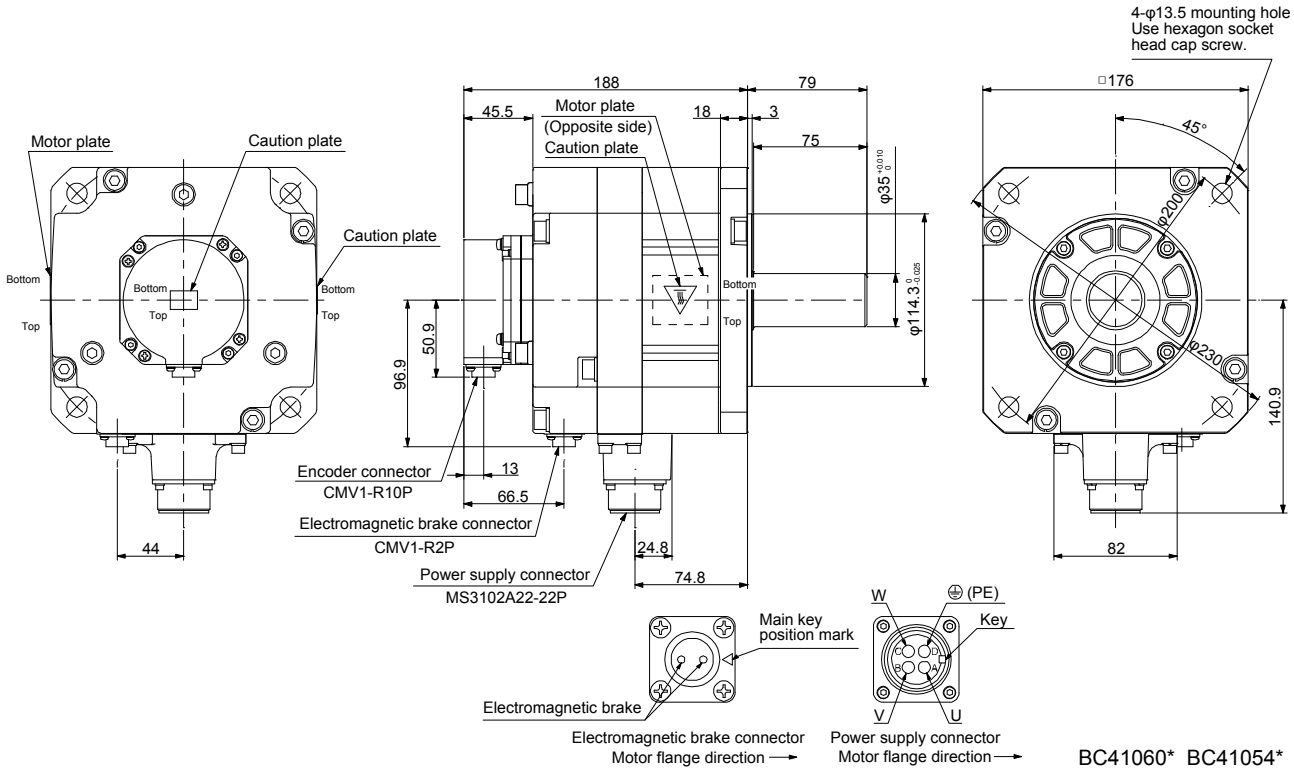

BC41060* BC41054*

Model	Output [kW]	Brake static friction torque [N•m]	Moment of inertia J [× 10^{-4} kg•m^2]	Mass [kg]
HG-SR201B	2.0	44	88.2	22
HG-SR352B HG-SR3524B	3.5			

[Unit: mm]

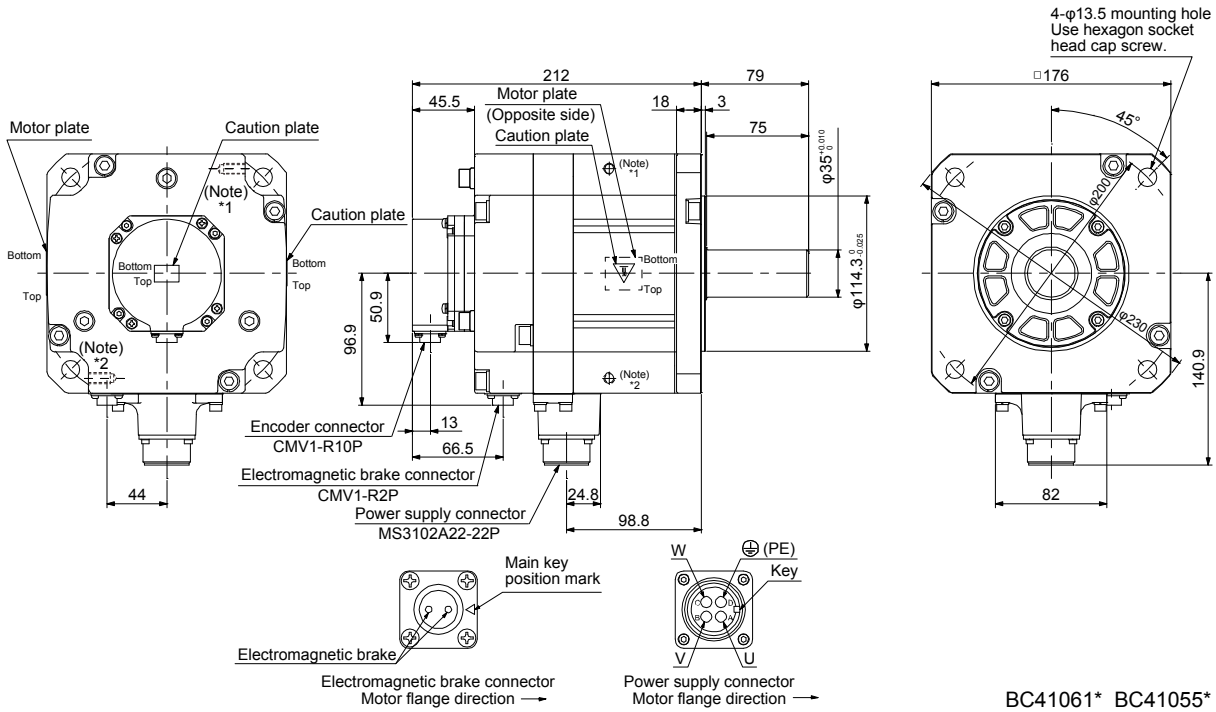

BC41061* BC41055*

Note. *1 and *2 are screw hole for eyebolt (M8).

Model	Output [kW]	Brake static friction torque [N•m]	Moment of inertia J [× 10^{-4} kg•m^2]	Mass [kg]
HG-SR301B	3.0	44	109	26
HG-SR502B HG-SR5024B	5.0			

[Unit: mm]

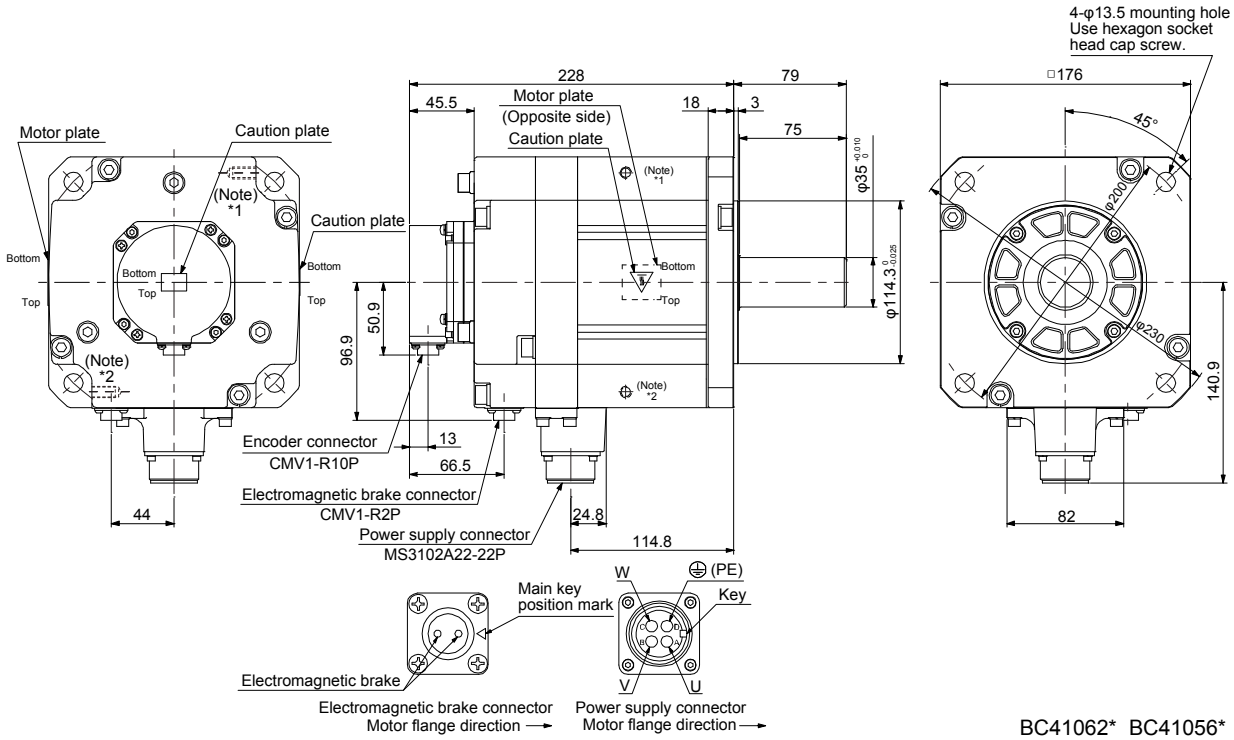

BC41062* BC41056*

Note. *1 and *2 are screw hole for eyebolt (M8).

Model	Output [kW]	Brake static friction torque [N•m]	Moment of inertia J [× 10^{-4} kg•m^2]	Mass [kg]
HG-SR421B	4.2	44	161	33
HG-SR702B HG-SR7024B	7.0			

[Unit: mm]

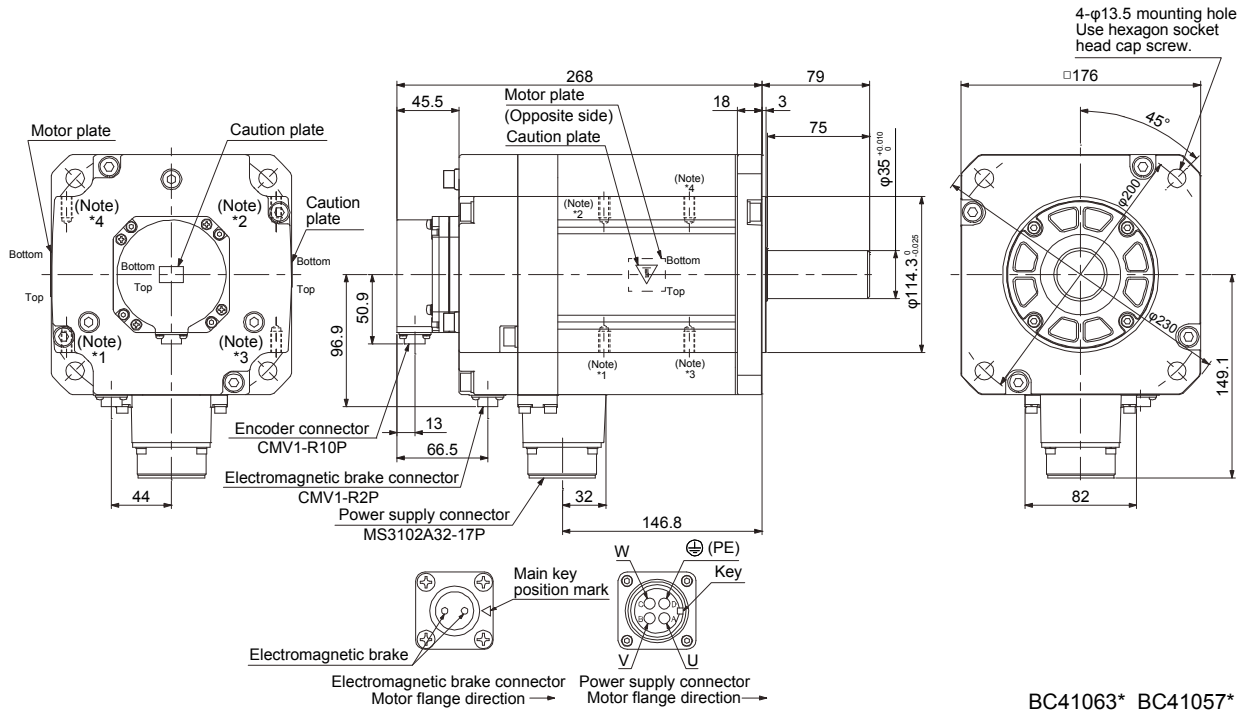

BC41063* BC41057*

Note. *1, *2, *3, and *4 are screw hole for eyebolt (M8).

7.7.3 For general industrial machine with a reducer (without an electromagnetic brake)

Model	Output [kW]	Reducer model	Reduction ratio	Moment of inertia J [× 10^{-4} kg•m^2]	Mass [kg]
HG-SR52G1 HG-SR524G1	0.5	CNVM-6100	1/6	8.08	18
			1/11	7.65	
			1/17	7.53	
			1/29	7.47	

[Unit: mm]

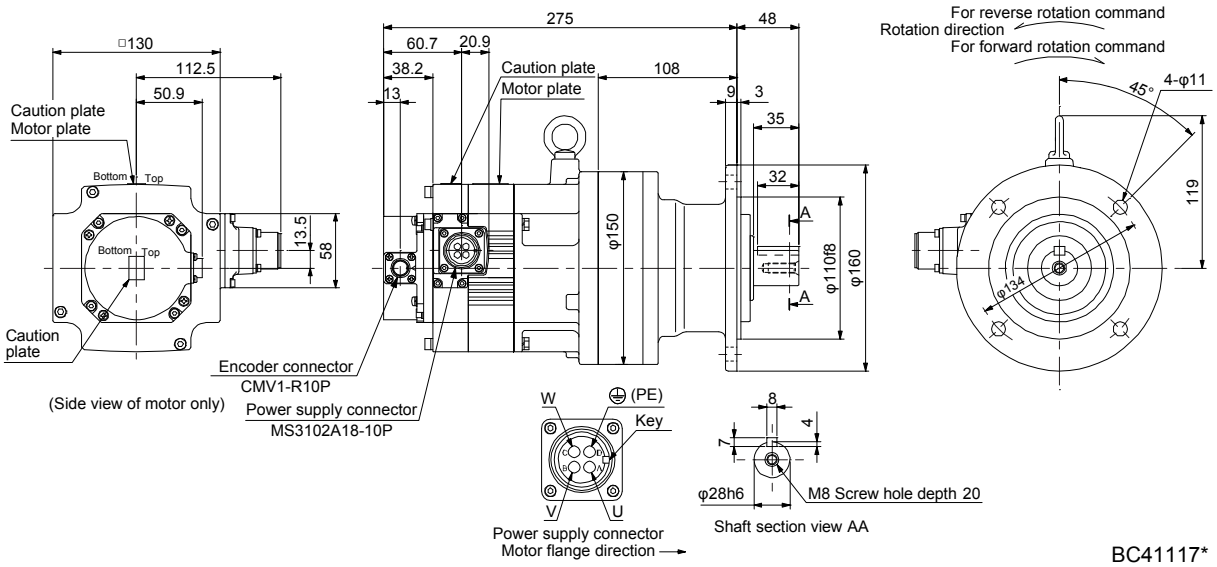

BC41117*

Model	Output [kW]	Reducer model	Reduction ratio	Moment of inertia J [× 10^{-4} kg•m^2]	Mass [kg]
HG-SR52G1 HG-SR524G1	0.5	CNVM-6120	1/35	8.26	27
			1/43	8.22	
			1/59	8.18	

[Unit: mm]

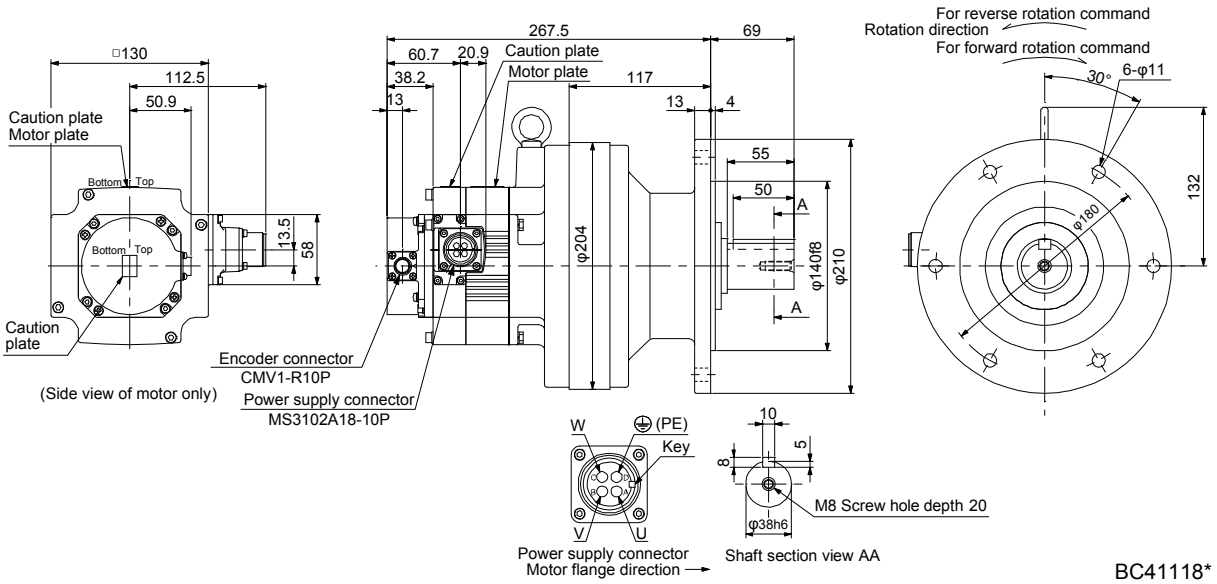

BC41118*

Model	Output [kW]	Reducer model	Reduction ratio	Moment of inertia J [× 10^{-4} kg•m^2]	Mass [kg]
HG-SR102G1 HG-SR1024G1	1.0	CNVM-6120	1/6	14.8	30
			1/11	13.3	
			1/17	12.9	
			1/29	12.6	
			1/35	12.6	

[Unit: mm]

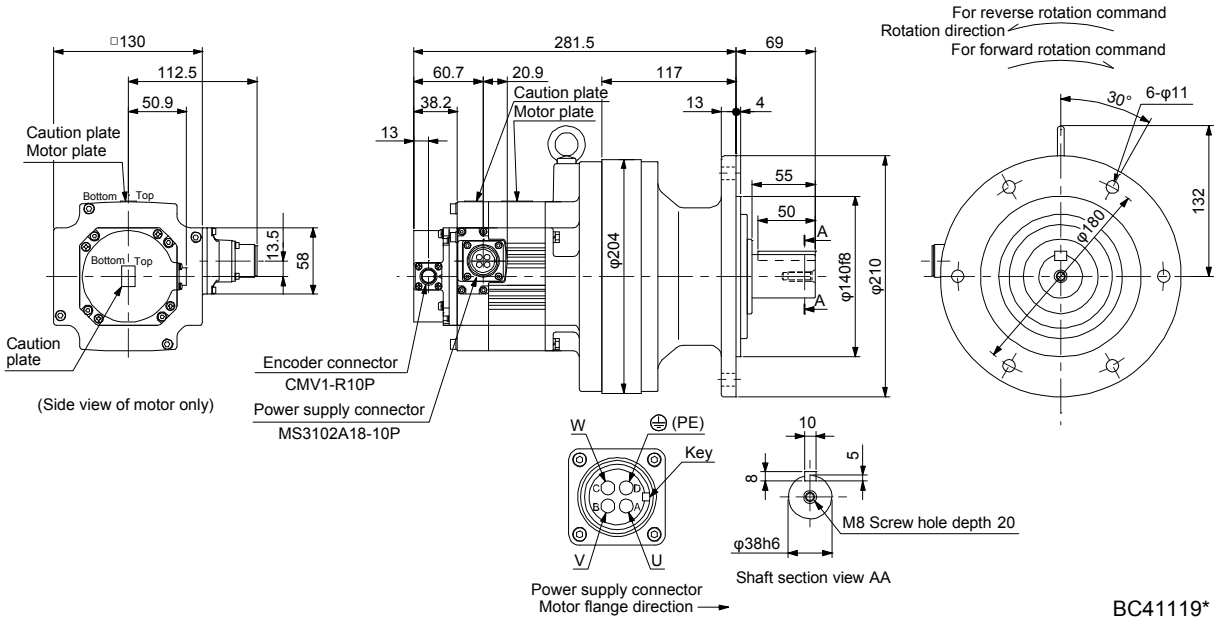

BC41119*

Model	Output [kW]	Reducer model	Reduction ratio	Moment of inertia J [× 10^{-4} kg•m^2]	Mass [kg]
HG-SR102G1 HG-SR1024G1	1.0	CHVM-6130	1/43	13.8	49

[Unit: mm]

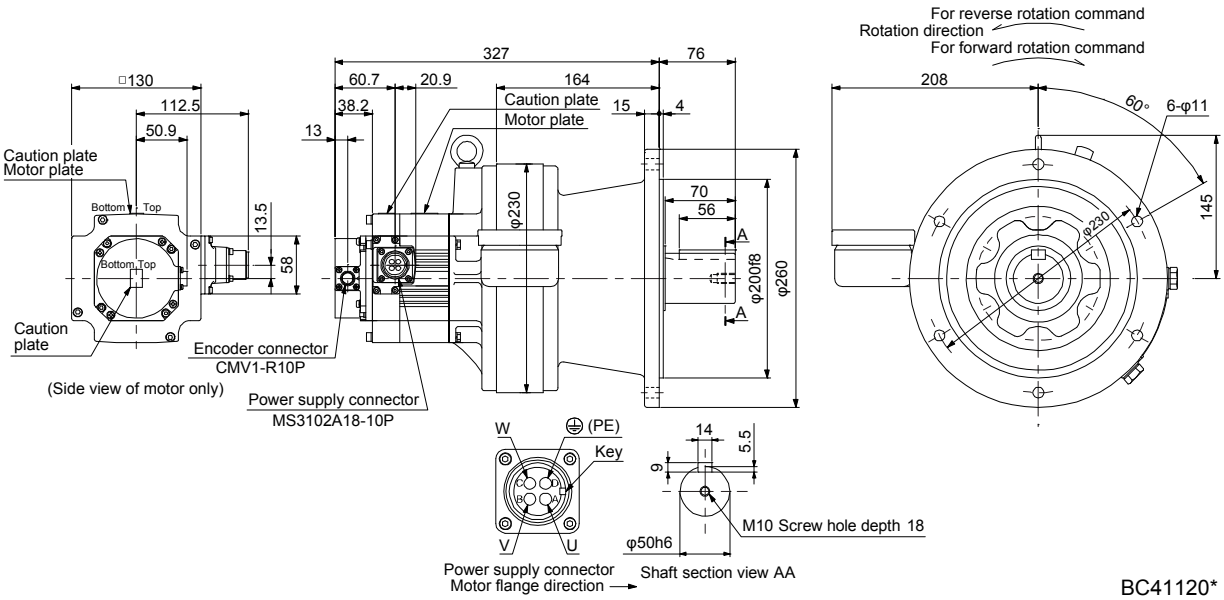

BC41120*

Model	Output [kW]	Reducer model	Reduction ratio	Moment of inertia J [× 10^{-4} kg•m^2]	Mass [kg]
HG-SR102G1 HG-SR1024G1	1.0	CHVM-6160	1/59	19.1	81

[Unit: mm]

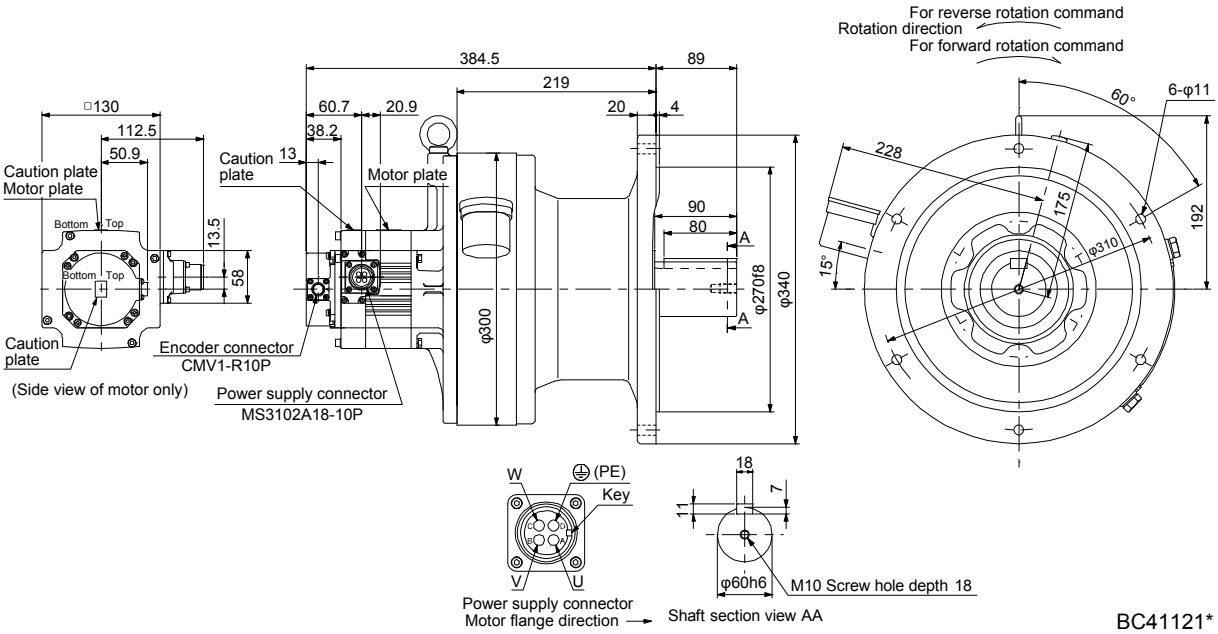

BC41121*

Model	Output [kW]	Reducer model	Reduction ratio	Moment of inertia J [× 10^{-4} kg•m^2]	Mass [kg]
HG-SR152G1 HG-SR1524G1	1.5	CNVM-6120	1/6	19.2	31
			1/11	17.7	
			1/17	17.3	

[Unit: mm]

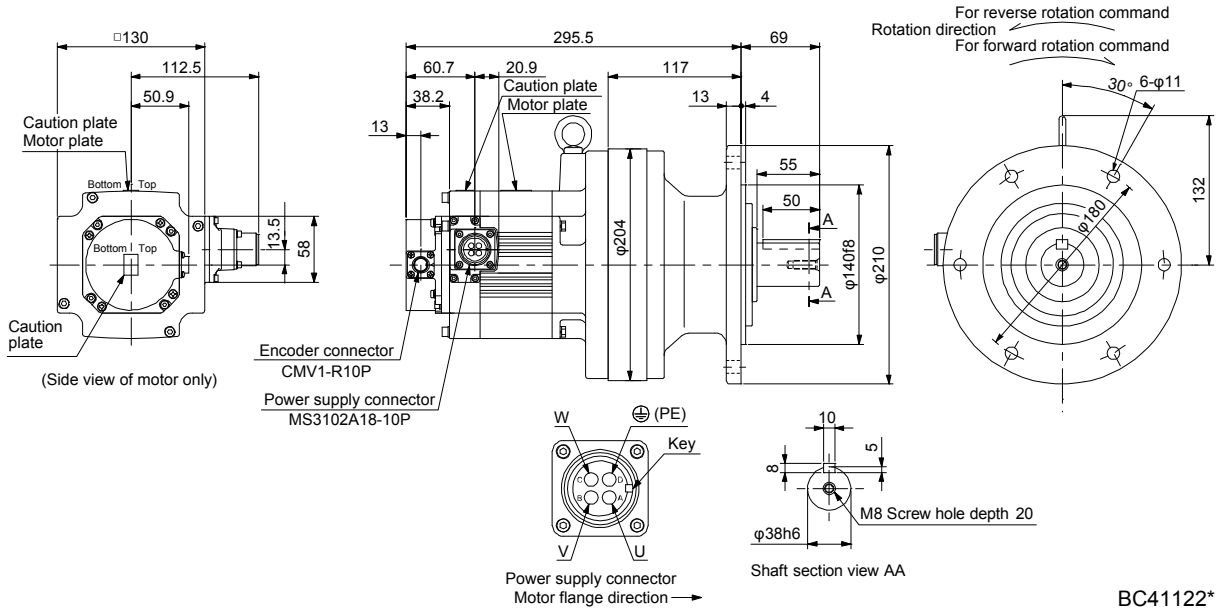

BC41122*

Model	Output [kW]	Reducer model	Reduction ratio	Moment of inertia J [× 10^{-4} kg•m^2]	Mass [kg]
HG-SR152G1	1.5	CHVM-6130	1/29	18.4	50
HG-SR1524G1			1/35	18.3	

[Unit: mm]

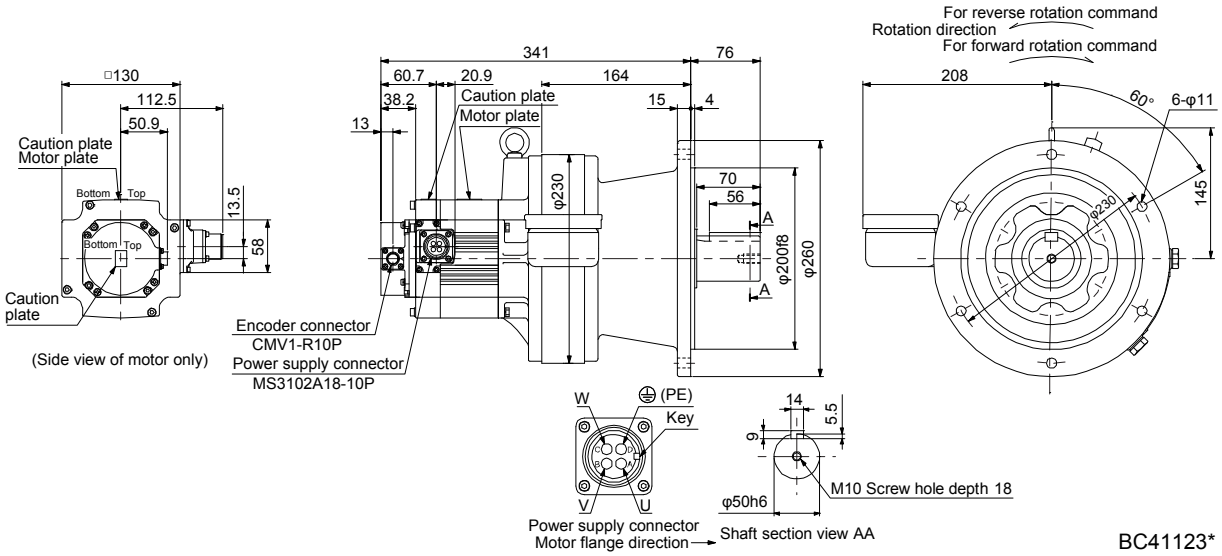

BC41123*

Model	Output [kW]	Reducer model	Reduction ratio	Moment of inertia J [× 10^{-4} kg•m^2]	Mass [kg]
HG-SR152G1	1.5	CHVM-6160	1/43	23.6	82
HG-SR1524G1			1/59	23.5	

[Unit: mm]

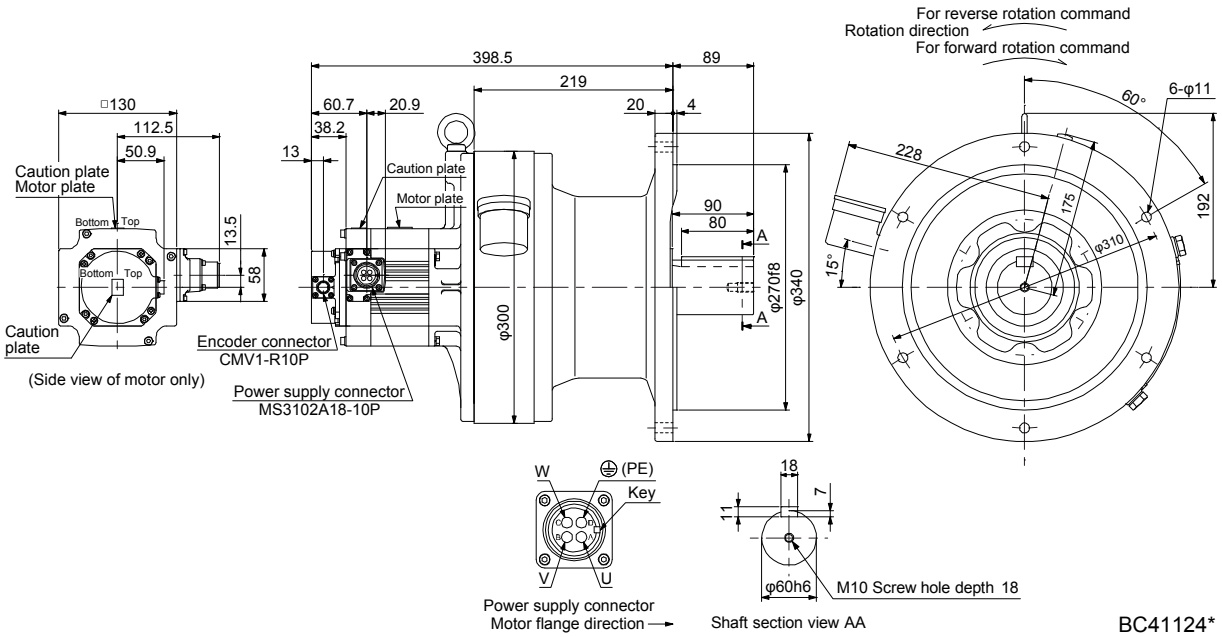

BC41124*

Model	Output [kW]	Reducer model	Reduction ratio	Moment of inertia J [× 10^{-4} kg•m^2]	Mass [kg]
HG-SR202G1 HG-SR2024G1	2.0	CNVM-6120	1/6	50.0	36
			1/11	48.4	
			1/17	48.1	

[Unit: mm]

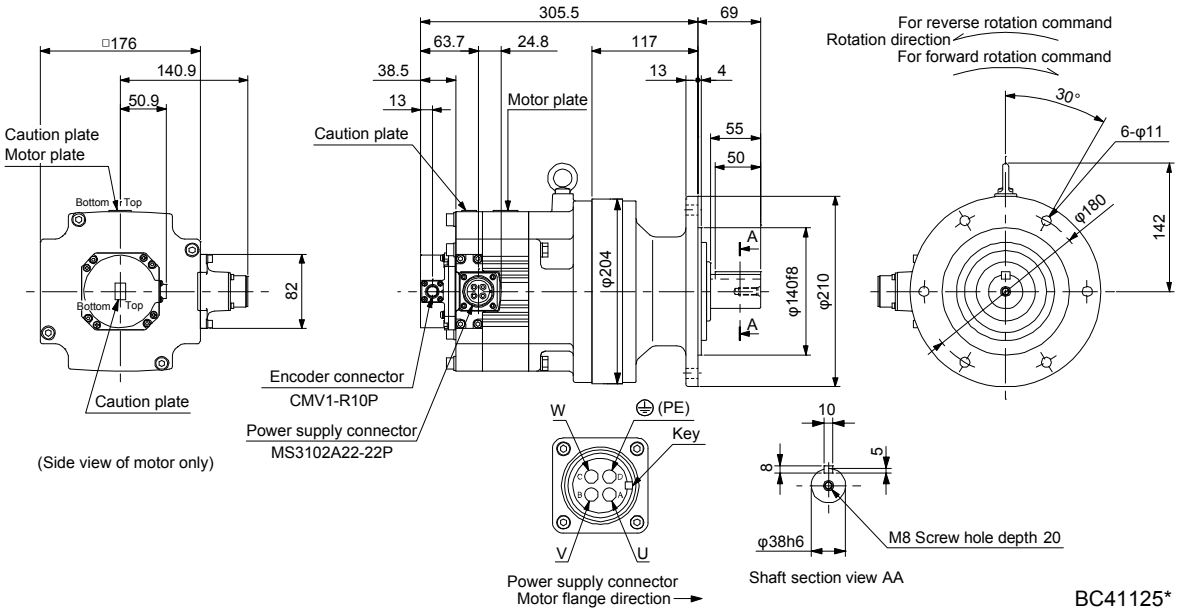

BC41125*

Model	Output [kW]	Reducer model	Reduction ratio	Moment of inertia J [× 10^{-4} kg•m^2]	Mass [kg]
HG-SR202G1 HG-SR2024G1	2.0	CHVM-6165	1/29	54.8	87
			1/35	54.5	
			1/43	54.3	
			1/59	54.2	

[Unit: mm]

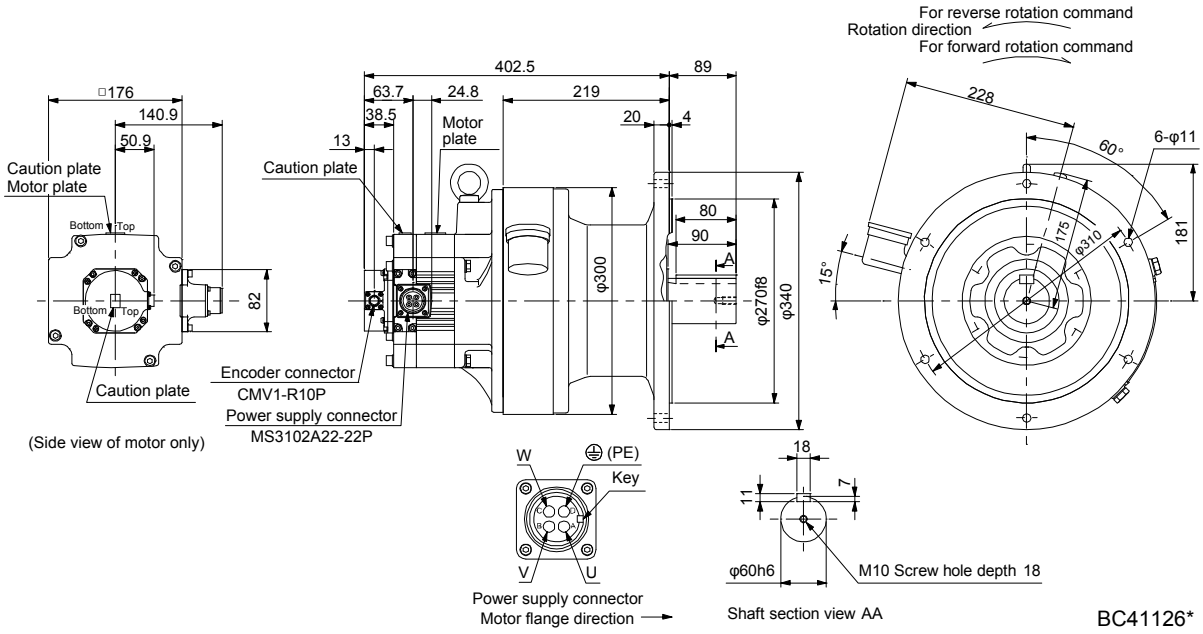

BC41126*

Model	Output [kW]	Reducer model	Reduction ratio	Moment of inertia J [× 10^{-4} kg•m^2]	Mass [kg]
HG-SR352G1 HG-SR3524G1	3.5	CHVM-6135	1/6	87.1	60
			1/11	82.8	
			1/17	81.5	

[Unit: mm]

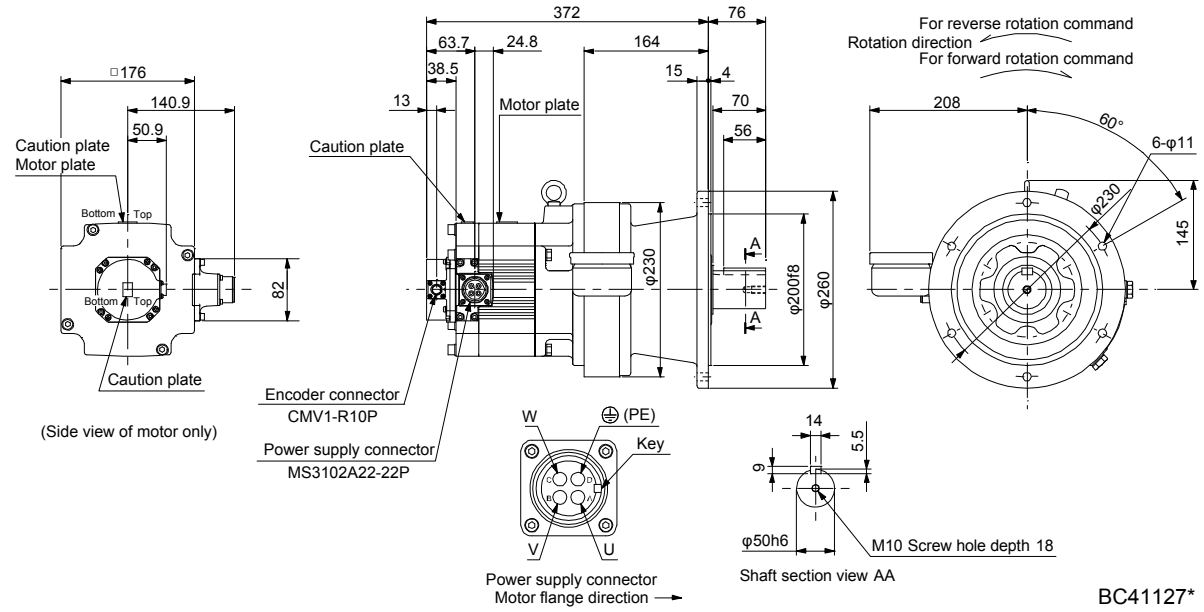

Model	Output [kW]	Reducer model	Reduction ratio	Moment of inertia J [× 10^{-4} kg•m^2]	Mass [kg]
HG-SR352G1 HG-SR3524G1	3.5	CHVM-6165	1/29	86.6	92
			1/35	86.3	

[Unit: mm]

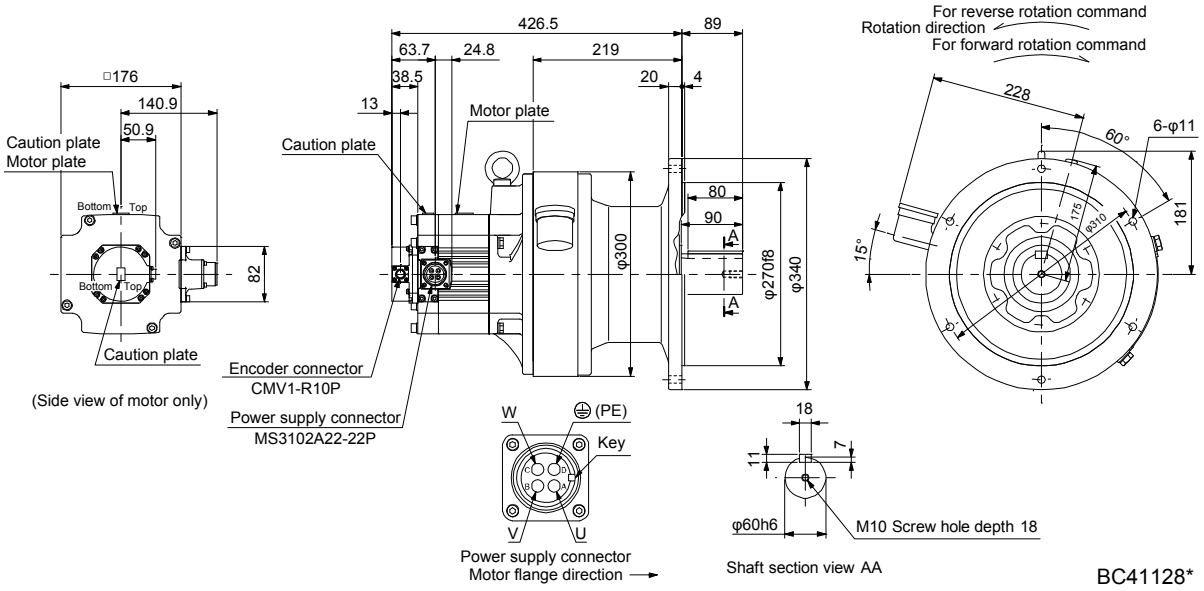

Model	Output [kW]	Reducer model	Reduction ratio	Moment of inertia J [× 10^{-4} kg•m^2]	Mass [kg]
HG-SR352G1	3.5	CHVM-6175	1/43	105	134
HG-SR3524G1			1/59	104	

[Unit: mm]

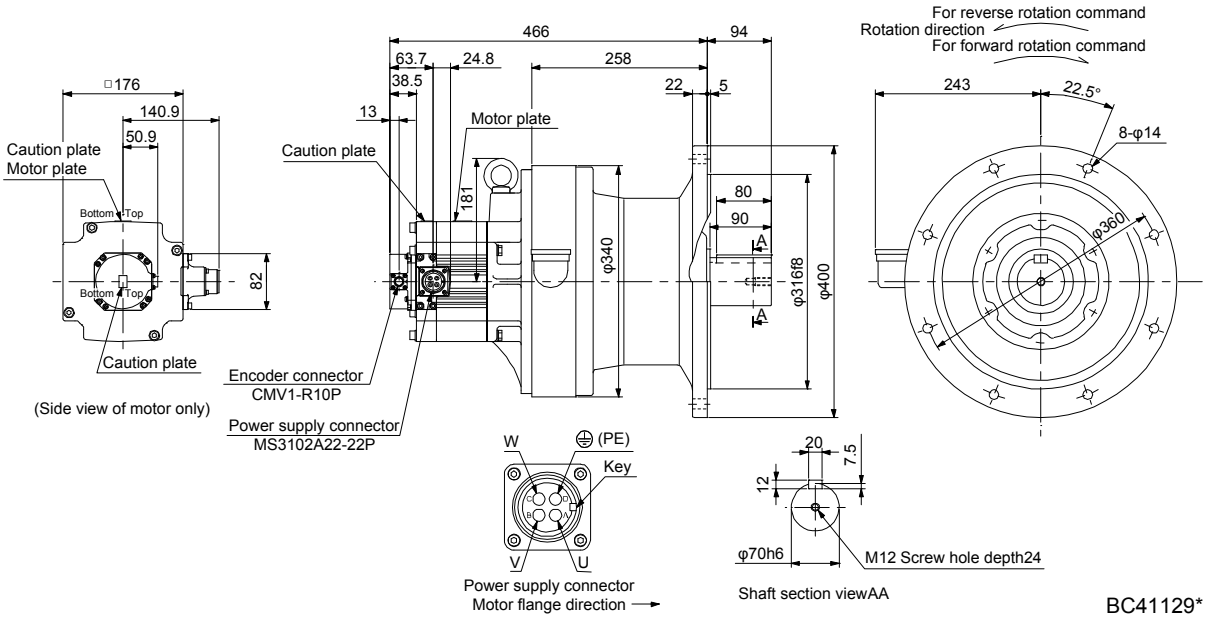

BC41129*

Model	Output [kW]	Reducer model	Reduction ratio	Moment of inertia J [× 10^{-4} kg•m^2]	Mass [kg]
HG-SR502G1	5.0	CHVM-6165	1/6	126	96
HG-SR5024G1			1/11	114	
			1/17	110	

[Unit: mm]

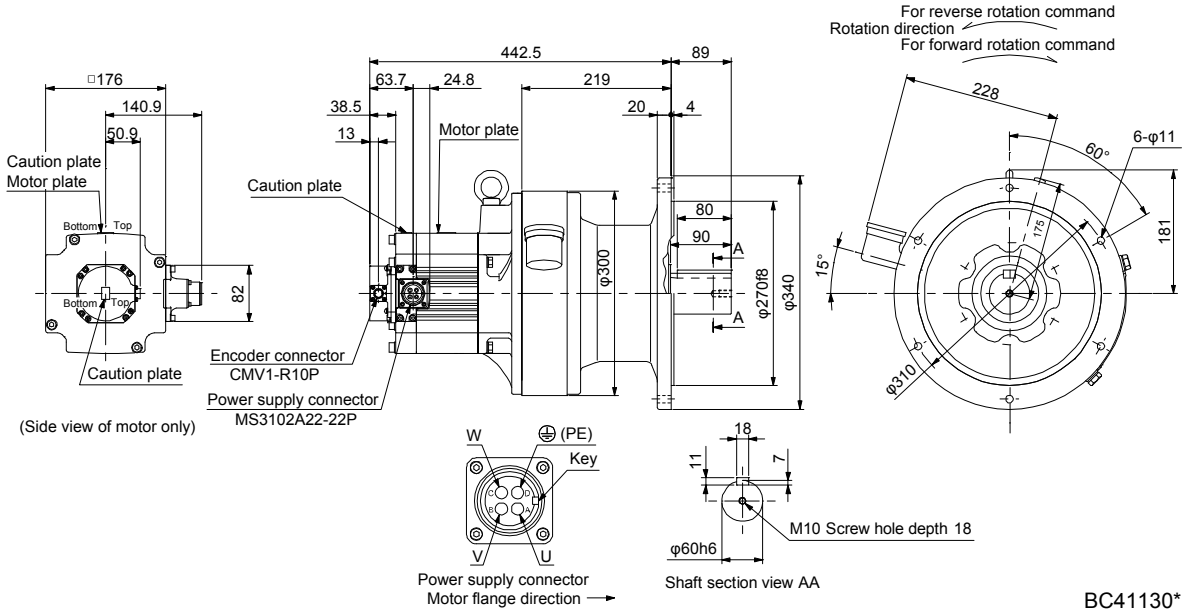

BC41130*

Model	Output [kW]	Reducer model	Reduction ratio	Moment of inertia J [× 10^{-4} kg•m^2]	Mass [kg]
HG-SR502G1 HG-SR5024G1	5.0	CHVM-6180	1/29	141	165
			1/35	140	
			1/43	139	

[Unit: mm]

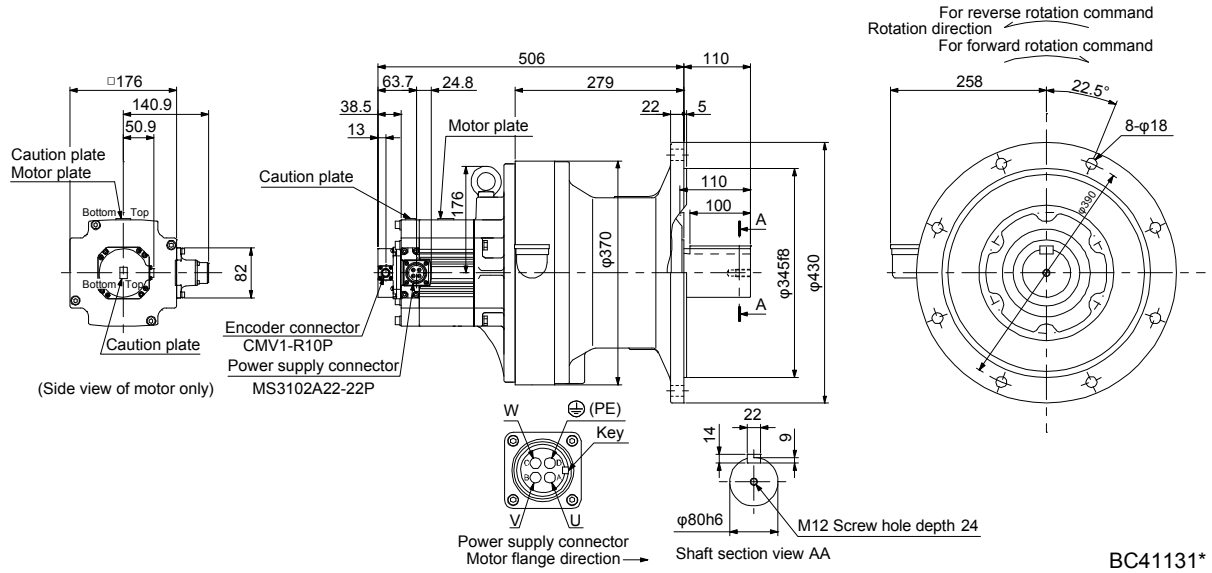

BC41131*

Model	Output [kW]	Reducer model	Reduction ratio	Moment of inertia J [× 10^{-4} kg•m^2]	Mass [kg]
HG-SR502G1 HG-SR5024G1	5.0	CHVM-6185	1/59	138	165

[Unit: mm]

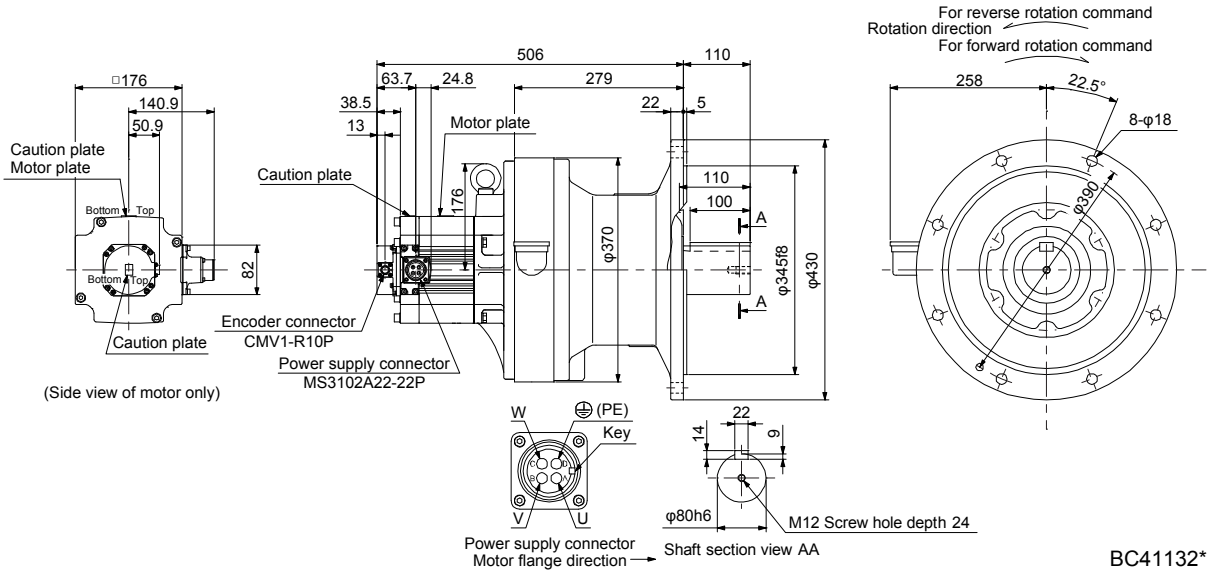

BC41132*

Model	Output [kW]	Reducer model	Reduction ratio	Moment of inertia J [× 10^{-4} kg•m^2]	Mass [kg]
HG-SR702G1 HG-SR7024G1	7.0	CHVM-6165	1/6	177	103

[Unit: mm]

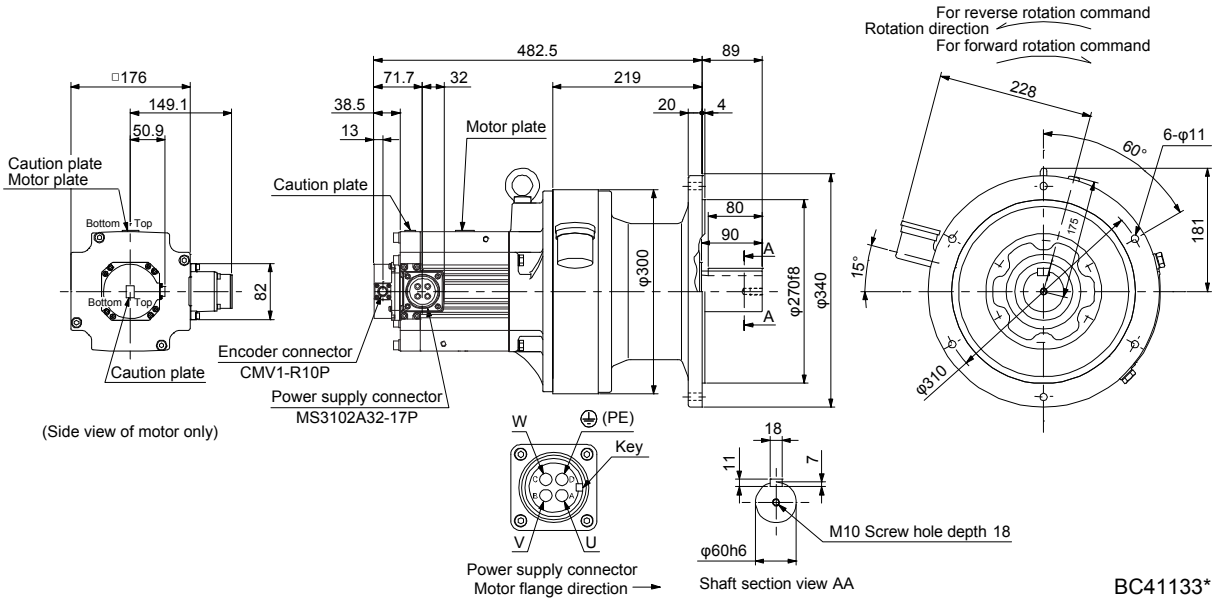

Model	Output [kW]	Reducer model	Reduction ratio	Moment of inertia J [× 10^{-4} kg•m^2]	Mass [kg]
HG-SR702G1 HG-SR7024G1	7.0	CHVM-6170	1/11	190	145
			1/17	182	

[Unit: mm]

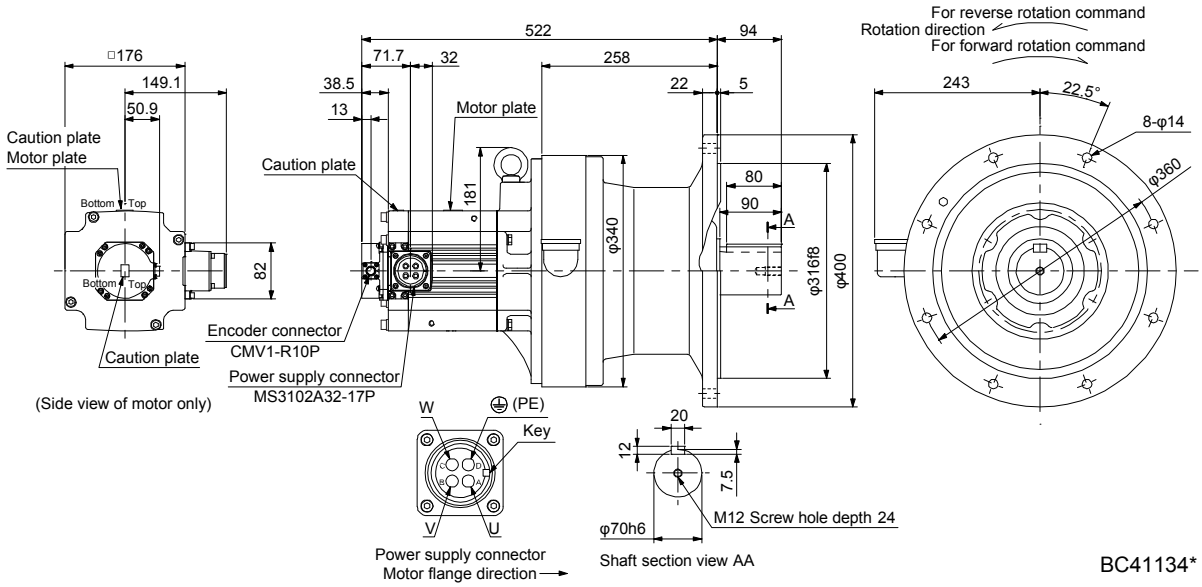

Model	Output [kW]	Reducer model	Reduction ratio	Moment of inertia J [× 10^{-4} kg•m^2]	Mass [kg]
HG-SR702G1	7.0	CHVM-6180	1/29	192	172
HG-SR7024G1			1/35	192	

[Unit: mm]

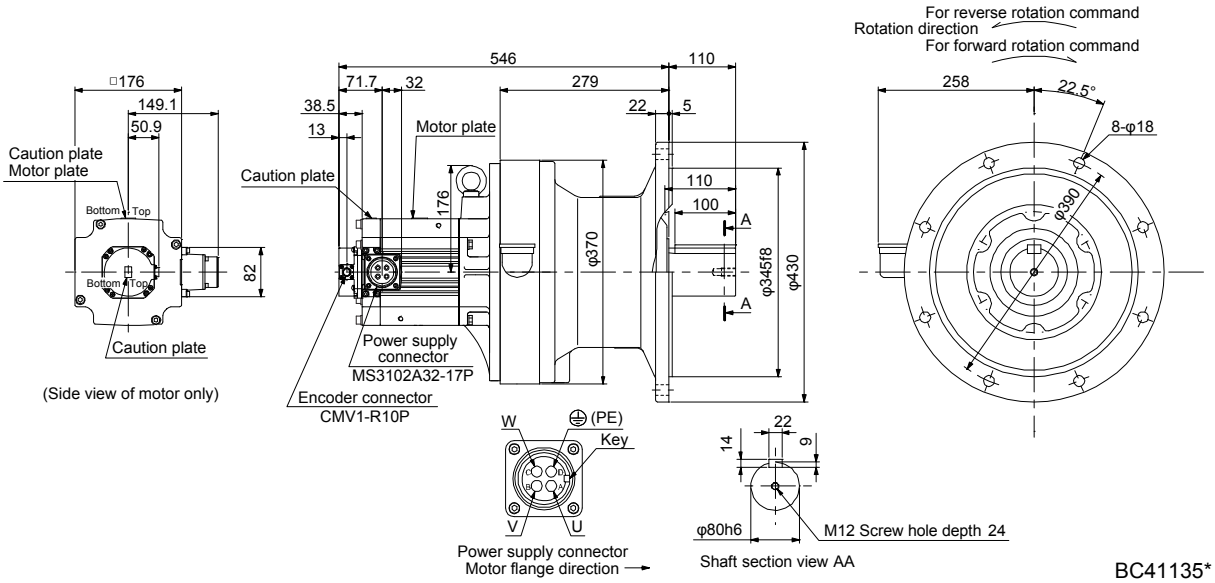

BC41135*

Model	Output [kW]	Reducer model	Reduction ratio	Moment of inertia J [× 10^{-4} kg•m^2]	Mass [kg]
HG-SR702G1	7.0	CHVM-6195	1/43	267	240
HG-SR7024G1			1/59	266	

[Unit: mm]

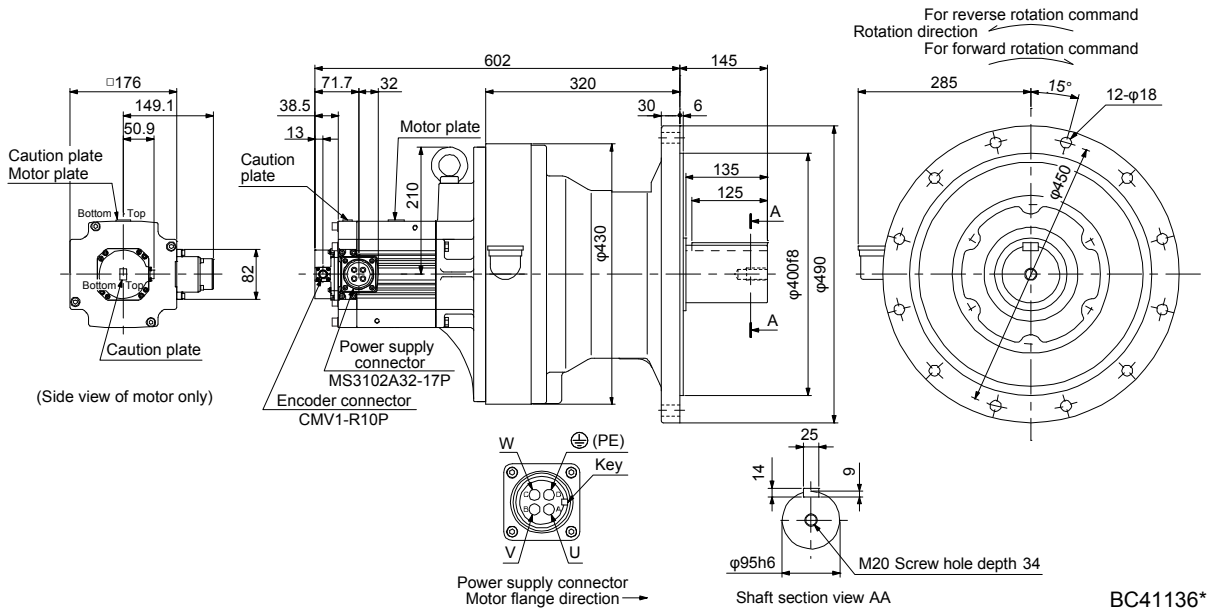

BC41136*

7.7.4 For general industrial machine with a reducer (with an electromagnetic brake)

Model	Output [kW]	Reducer model	Reduction ratio	Brake static friction torque [N•m]	Moment of inertia J [× 10^{-4} kg•m^2]	Mass [kg]
HG-SR52BG1 HG-SR524BG1	0.5	CNVM-6100	1/6	8.5	10.3	20
			1/11		9.85	
			1/17		9.73	
			1/29		9.67	

[Unit: mm]

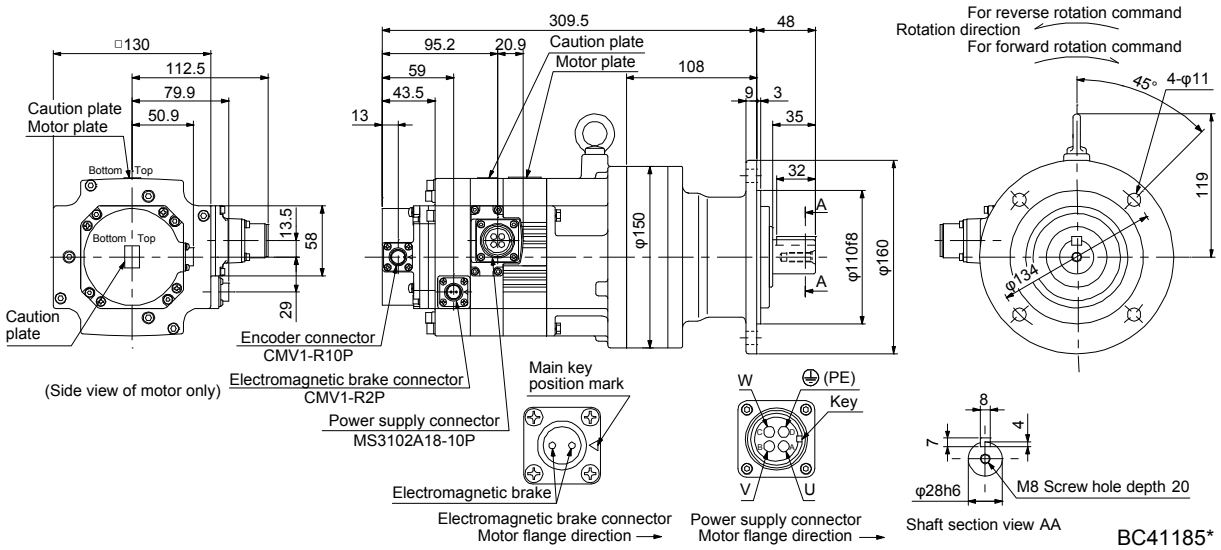

Model	Output [kW]	Reducer model	Reduction ratio	Brake static friction torque [N•m]	Moment of inertia J [× 10^{-4} kg•m^2]	Mass [kg]
HG-SR52BG1 HG-SR524BG1	0.5	CNVM-6120	1/35	8.5	10.5	29
			1/43		10.4	
			1/59		10.4	

[Unit: mm]

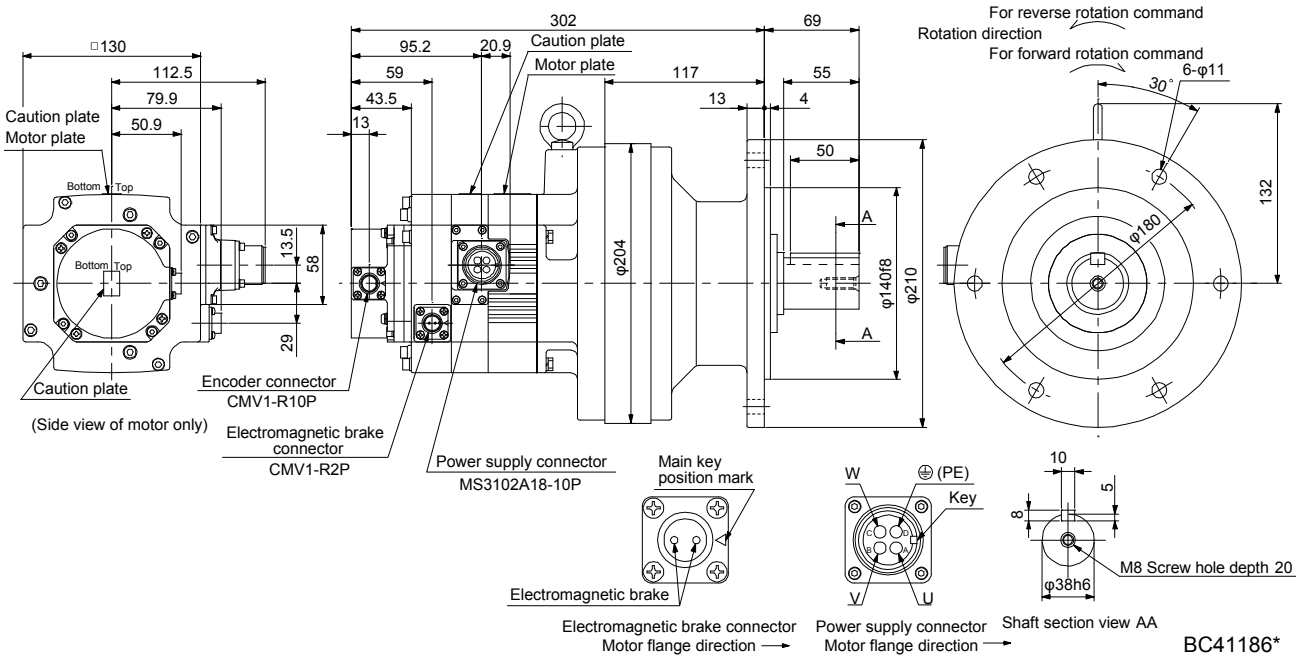

Model	Output [kW]	Reducer model	Reduction ratio	Brake static friction torque [N•m]	Moment of inertia J [× 10^{-4} kg•m^2]	Mass [kg]
HG-SR102BG1 HG-SR1024BG1	1.0	CNVM-6120	1/6	8.5	17.0	32
			1/11		15.5	
			1/17		15.1	
			1/29		14.8	
			1/35		14.8	

[Unit: mm]

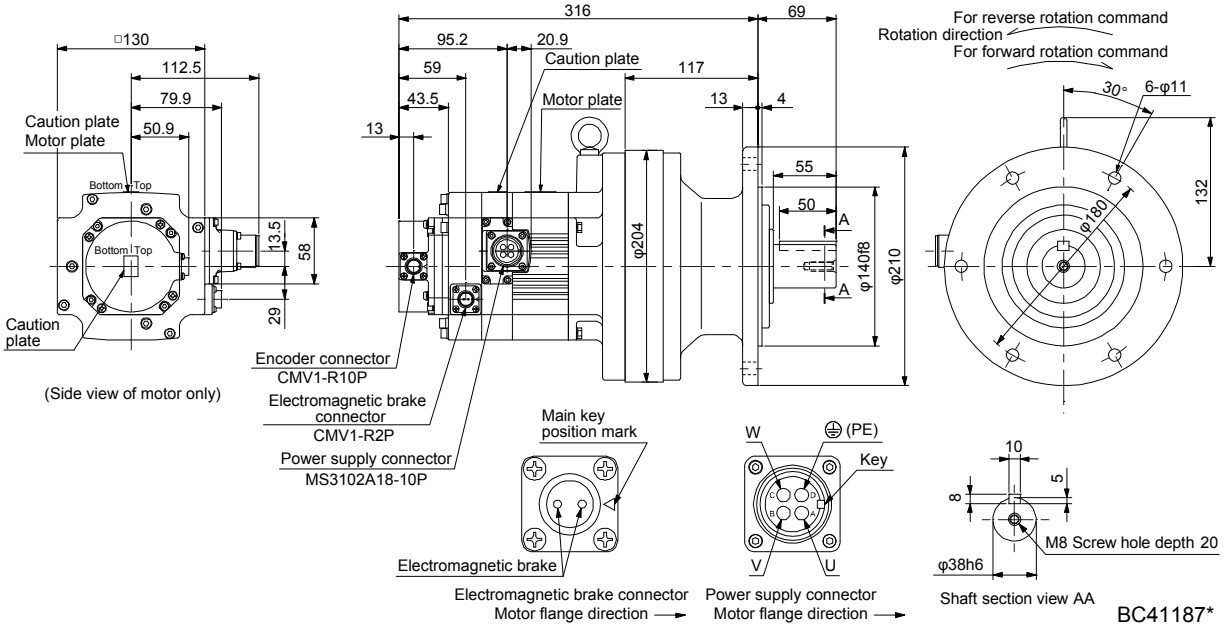

Model	Output [kW]	Reducer model	Reduction ratio	Brake static friction torque [N•m]	Moment of inertia J [× 10^{-4} kg•m^2]	Mass [kg]
HG-SR102BG1 HG-SR1024BG1	1.0	CHVM-6130	1/43	8.5	16.0	51

[Unit: mm]

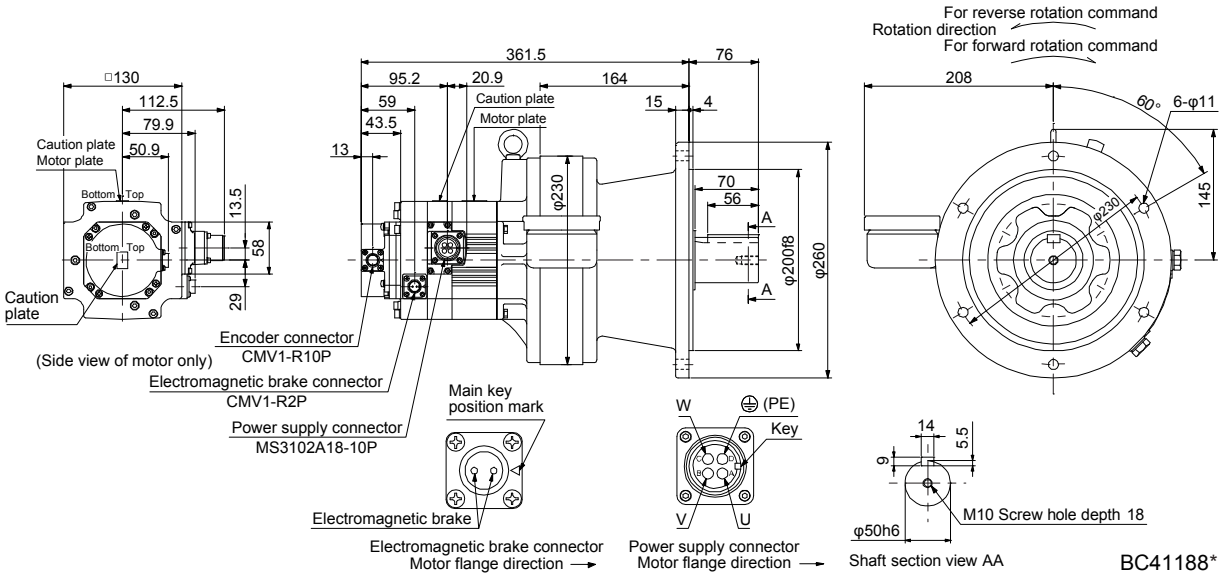

Model	Output [kW]	Reducer model	Reduction ratio	Brake static friction torque [N•m]	Moment of inertia J [× 10^{-4} kg•m^2]	Mass [kg]
HG-SR102BG1 HG-SR1024BG1	1.0	CHVM-6160	1/59	8.5	21.3	83

[Unit: mm]

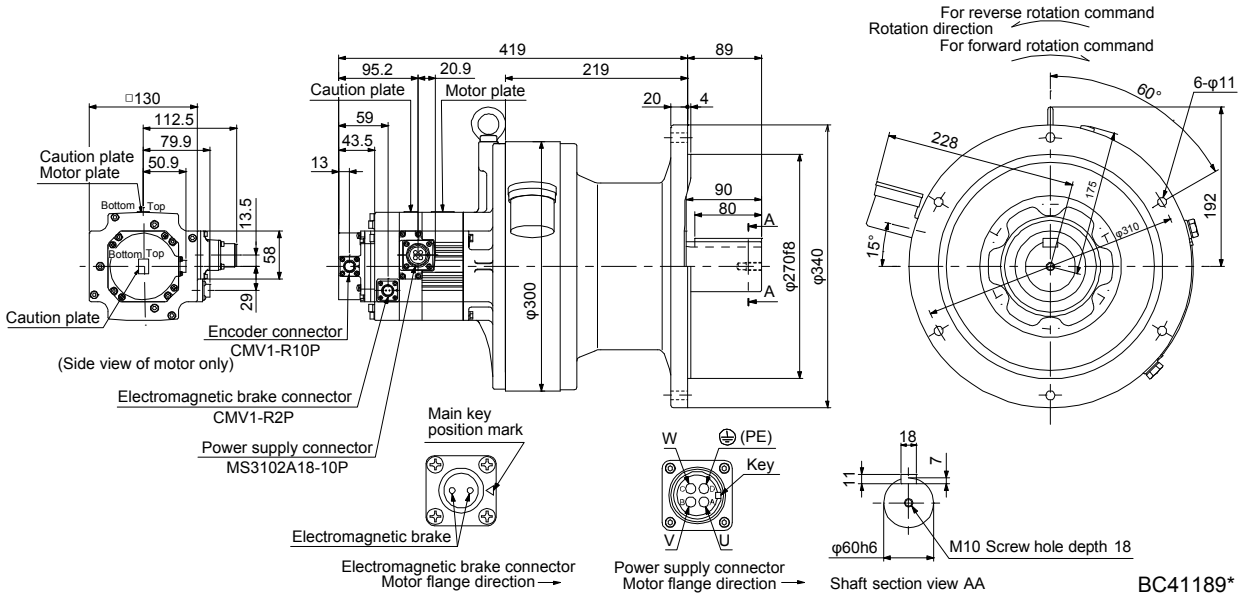

Model	Output [kW]	Reducer model	Reduction ratio	Brake static friction torque [N•m]	Moment of inertia J [× 10^{-4} kg•m^2]	Mass [kg]
HG-SR152BG1 HG-SR1524BG1	1.5	CNVM-6120	1/6	8.5	21.4	33
			1/11		19.9	
			1/17		19.5	

[Unit: mm]

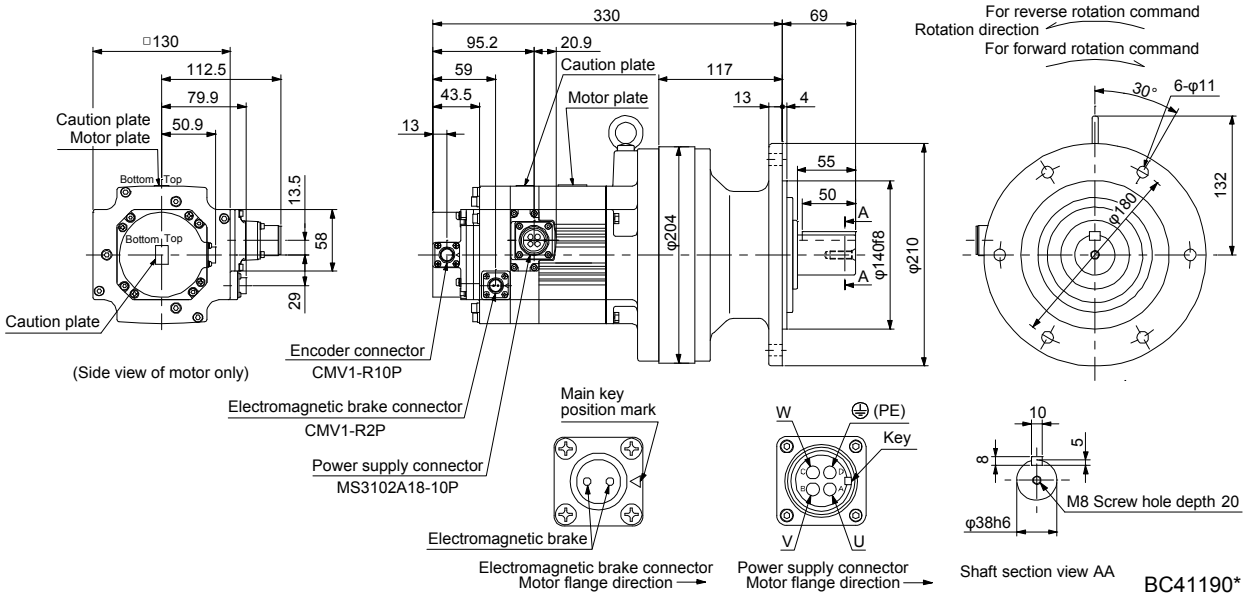

Model	Output [kW]	Reducer model	Reduction ratio	Brake static friction torque [N•m]	Moment of inertia J [× 10^{-4} kg•m^2]	Mass [kg]
HG-SR152BG1	1.5	CHVM-6130	1/29	8.5	20.6	52
HG-SR1524BG1			1/35		20.5	

[Unit: mm]

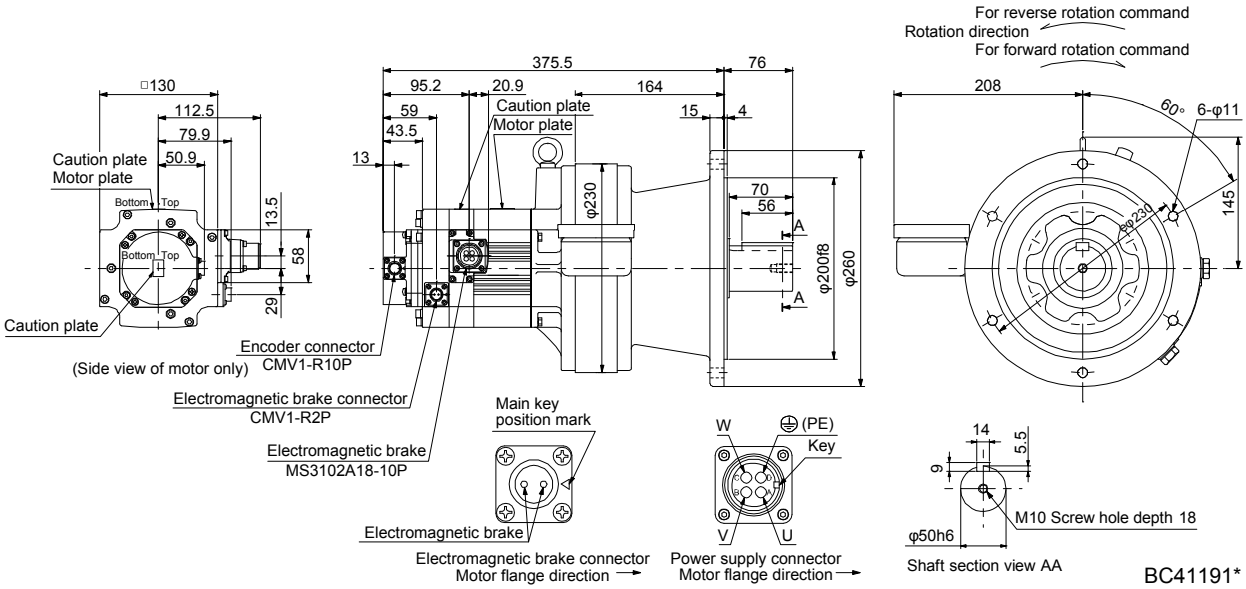

Model	Output [kW]	Reducer model	Reduction ratio	Brake static friction torque [N•m]	Moment of inertia J [× 10^{-4} kg•m^2]	Mass [kg]
HG-SR152BG1	1.5	CHVM-6160	1/43	8.5	25.8	84
HG-SR1524BG1			1/59		25.7	

[Unit: mm]

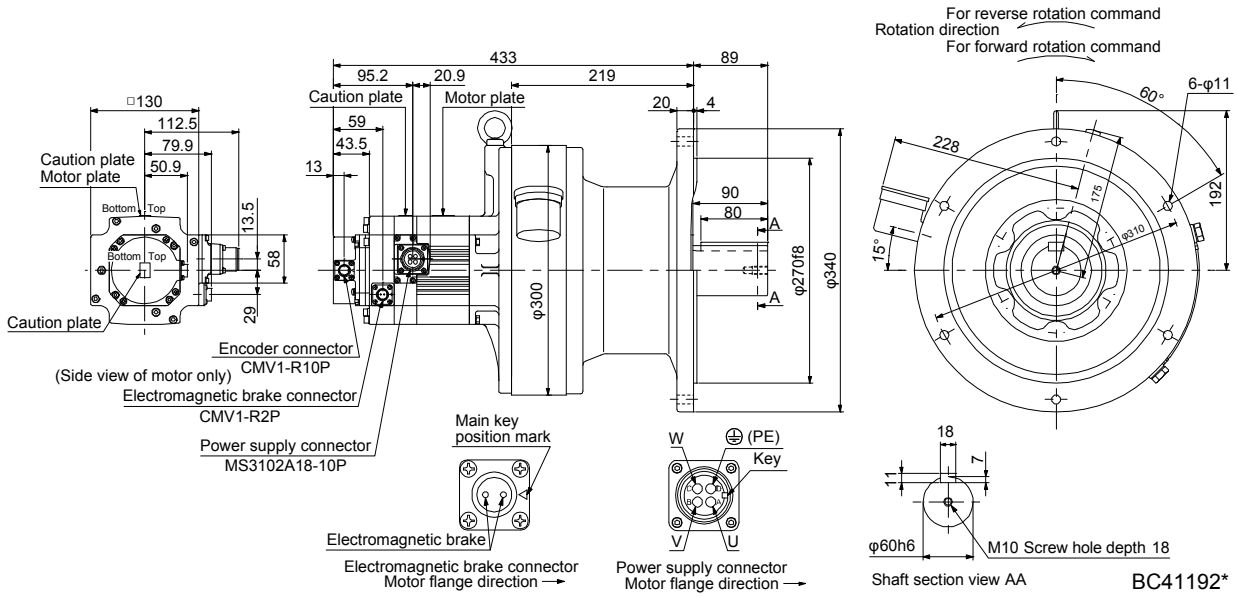

Model	Output [kW]	Reducer model	Reduction ratio	Brake static friction torque [N•m]	Moment of inertia J [× 10^{-4} kg•m^2]	Mass [kg]
HG-SR202BG1 HG-SR2024BG1	2.0	CNVM-6120	1/6	44	59.4	42
			1/11		57.8	
			1/17		57.5	

[Unit: mm]

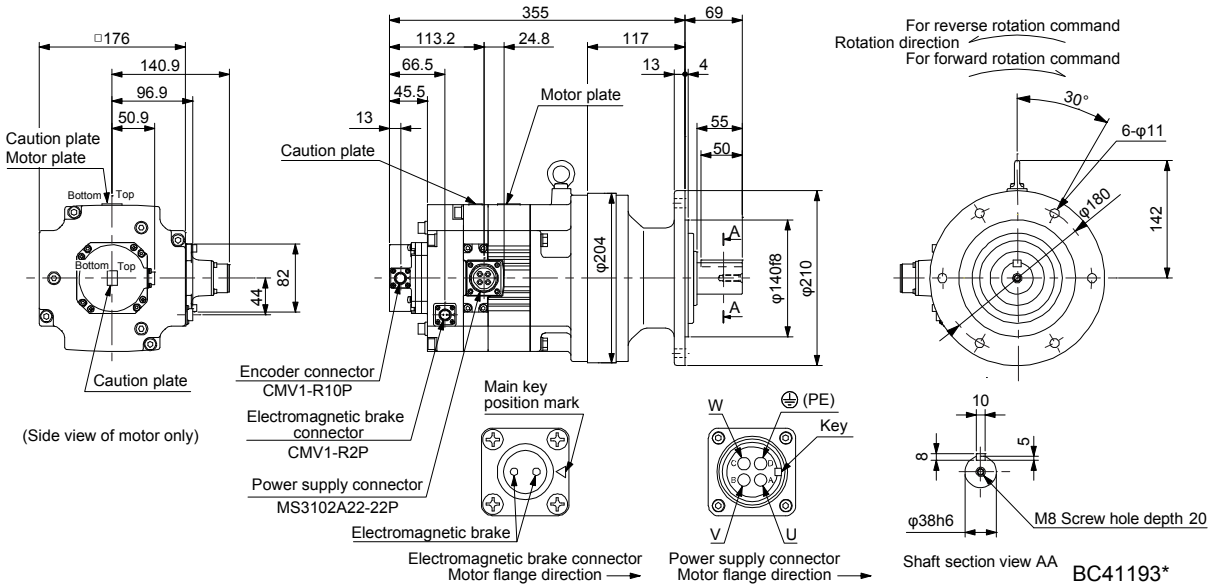

Model	Output [kW]	Reducer model	Reduction ratio	Brake static friction torque [N•m]	Moment of inertia J [× 10^{-4} kg•m^2]	Mass [kg]
HG-SR202BG1 HG-SR2024BG1	2.0	CHVM-6165	1/29	44	64.2	93
			1/35		63.9	
			1/43		63.7	
			1/59		63.6	

[Unit: mm]

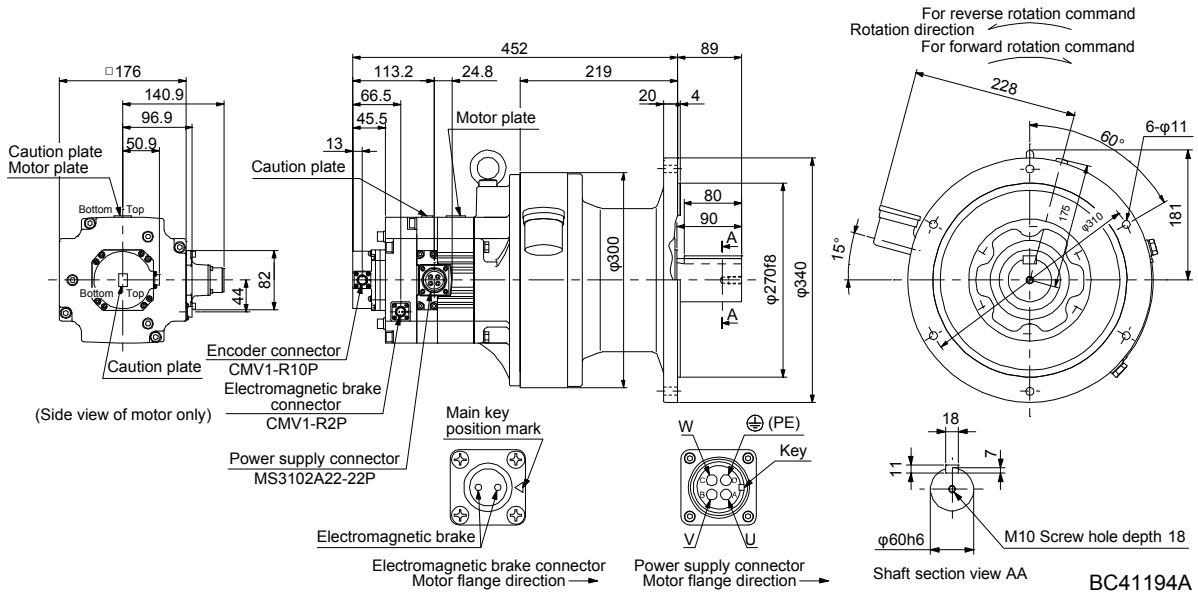

Model	Output [kW]	Reducer model	Reduction ratio	Brake static friction torque [N•m]	Moment of inertia J [× 10^{-4} kg•m^2]	Mass [kg]
HG-SR352BG1 HG-SR3524BG1	3.5	CHVM-6135	1/6	44	96.5	66
			1/11		92.2	
			1/17		90.9	

[Unit: mm]

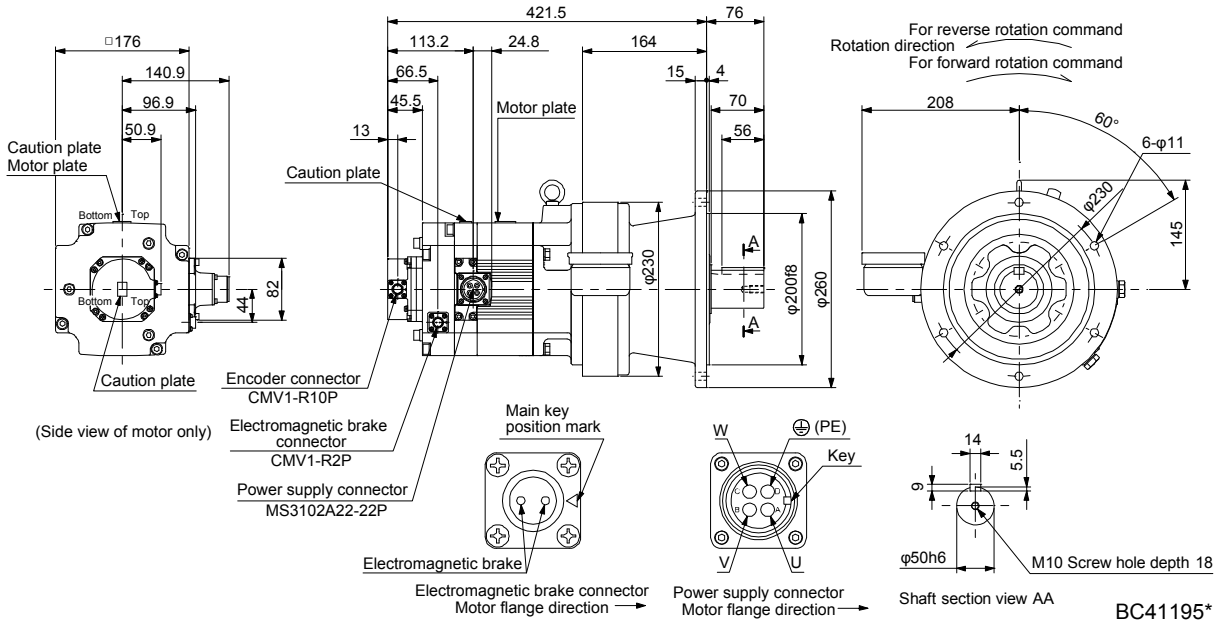

Model	Output [kW]	Reducer model	Reduction ratio	Brake static friction torque [N•m]	Moment of inertia J [× 10^{-4} kg•m^2]	Mass [kg]
HG-SR352BG1 HG-SR3524BG1	3.5	CHVM-6165	1/29	44	96.0	98
			1/35		95.7	

[Unit: mm]

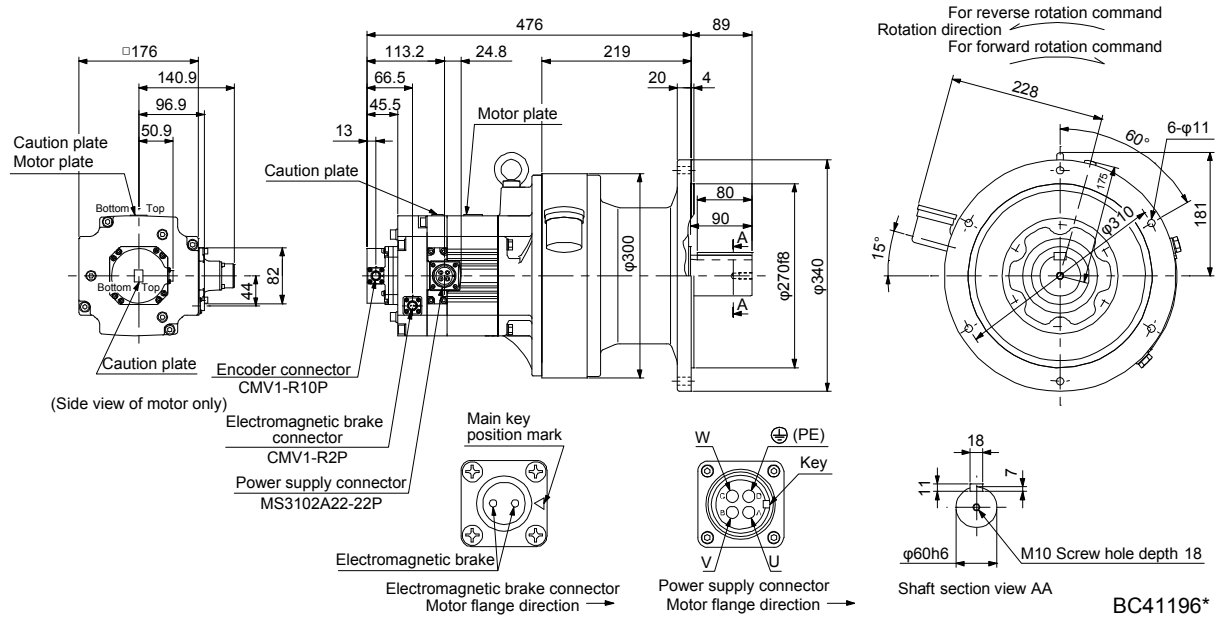

Model	Output [kW]	Reducer model	Reduction ratio	Brake static friction torque [N•m]	Moment of inertia J [× 10^{-4} kg•m^2]	Mass [kg]
HG-SR352BG1 HG-SR3524BG1	3.5	CHVM-6175	1/43	44	114	140
			1/59		113	

[Unit: mm]

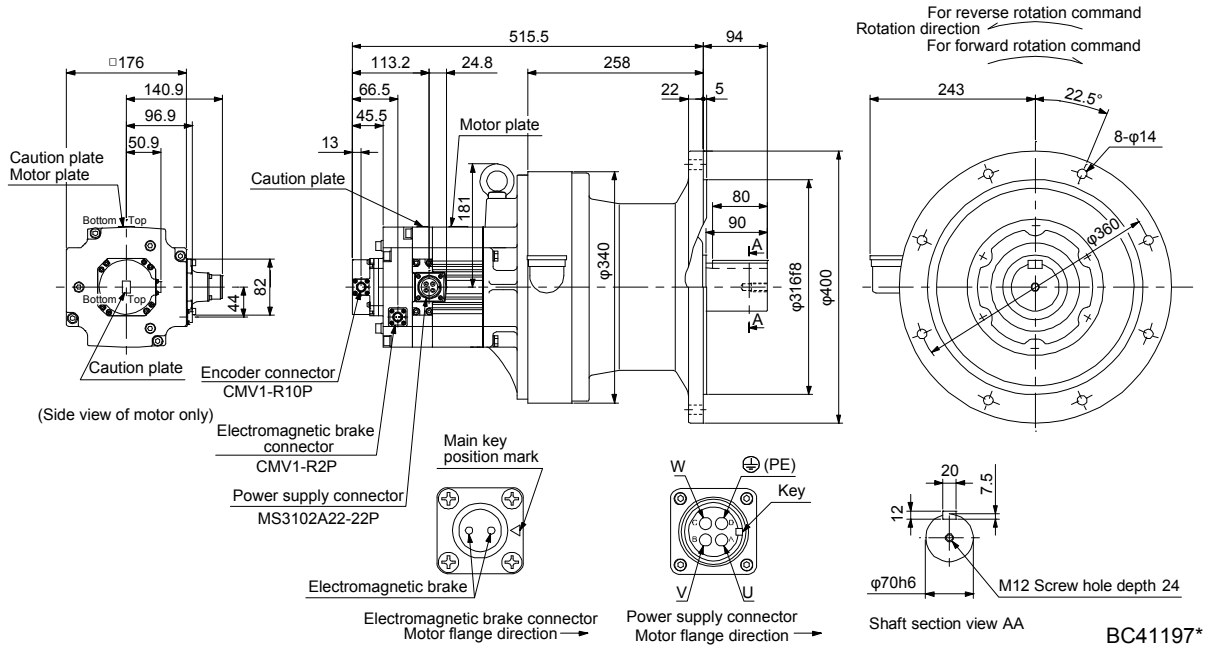

Model	Output [kW]	Reducer model	Reduction ratio	Brake static friction torque [N•m]	Moment of inertia J [× 10^{-4} kg•m^2]	Mass [kg]
HG-SR502BG1 HG-SR5024BG1	5.0	CHVM-6165	1/6	44	135	102
			1/11		123	
			1/17		119	

[Unit: mm]

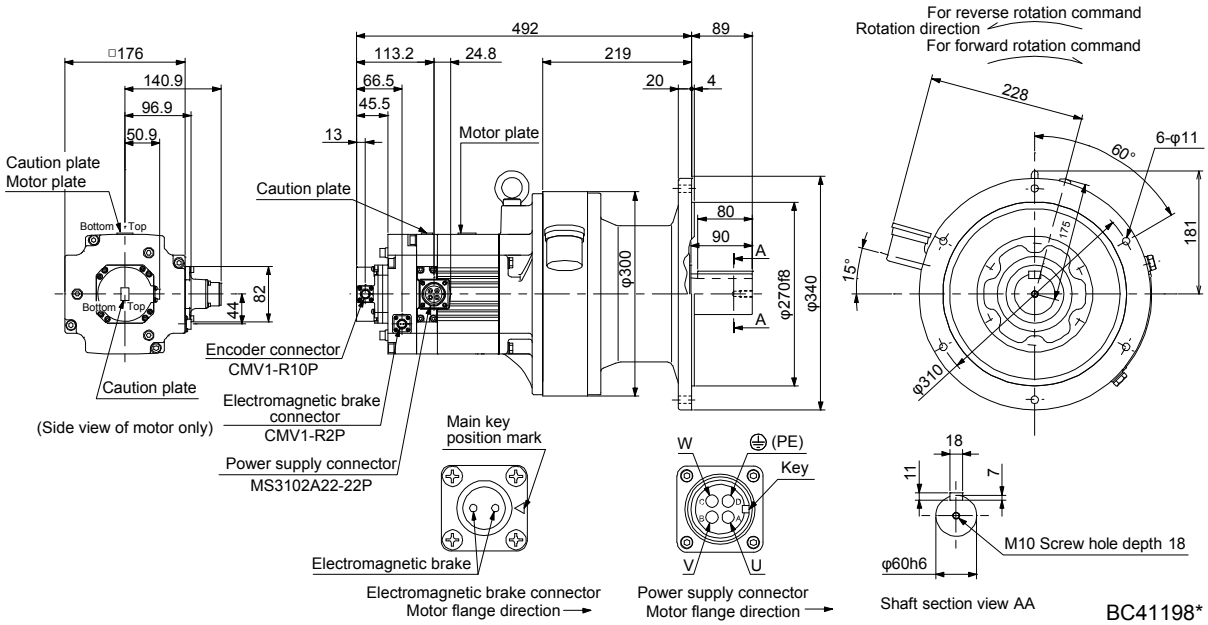

Model	Output [kW]	Reducer model	Reduction ratio	Brake static friction torque [N•m]	Moment of inertia J [× 10^{-4} kg•m^2]	Mass [kg]
HG-SR502BG1 HG-SR5024BG1	5.0	CHVM-6180	1/29	44	150	171
			1/35		150	
			1/43		149	

[Unit: mm]

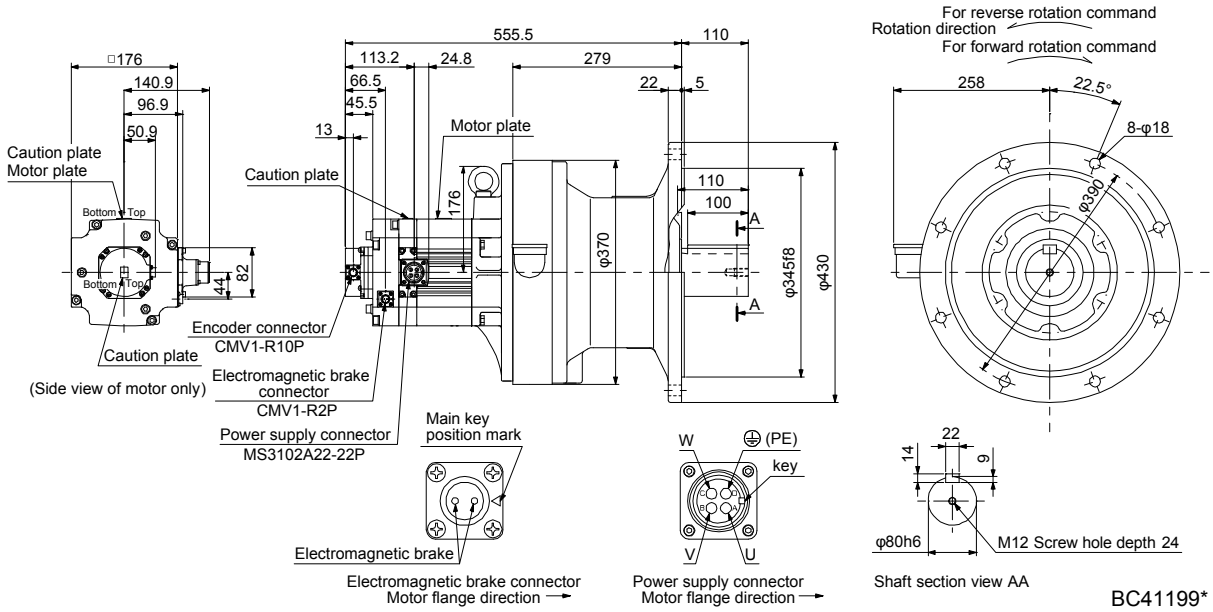

BC41199*

Model	Output [kW]	Reducer model	Reduction ratio	Brake static friction torque [N•m]	Moment of inertia J [× 10^{-4} kg•m^2]	Mass [kg]
HG-SR502BG1 HG-SR5024BG1	5.0	CHVM-6185	1/59	44	147	171

[Unit: mm]

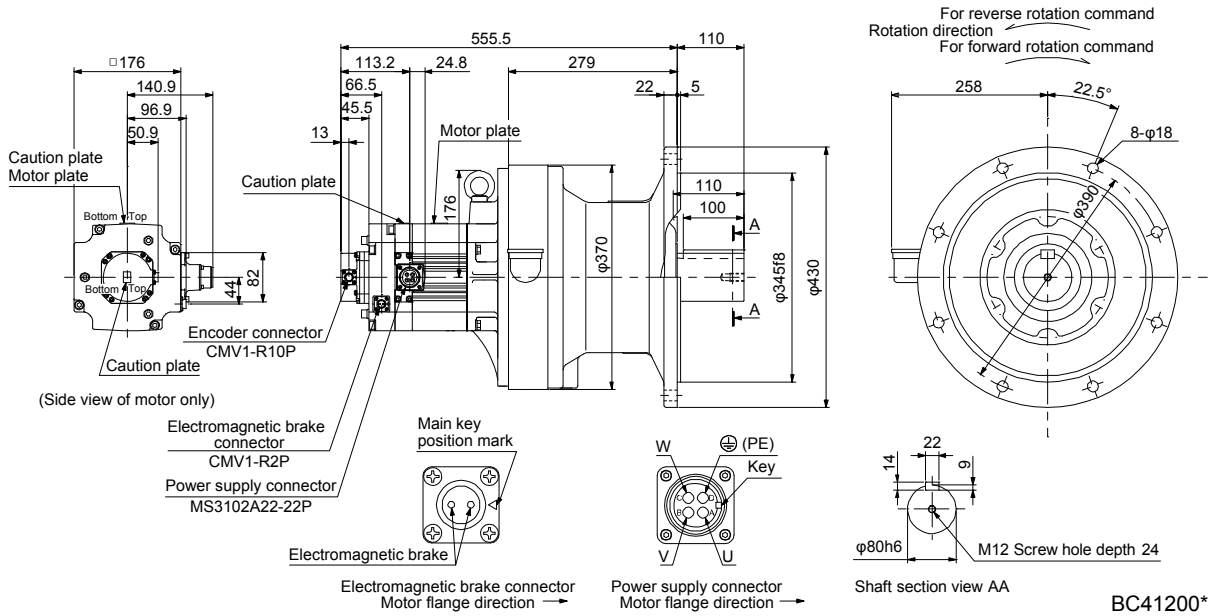

BC41200*

Model	Output [kW]	Reducer model	Reduction ratio	Brake static friction torque [N•m]	Moment of inertia J [× 10^{-4} kg•m^2]	Mass [kg]
HG-SR702BG1 HG-SR7024BG1	7.0	CHVM-6165	1/6	44	187	109

[Unit: mm]

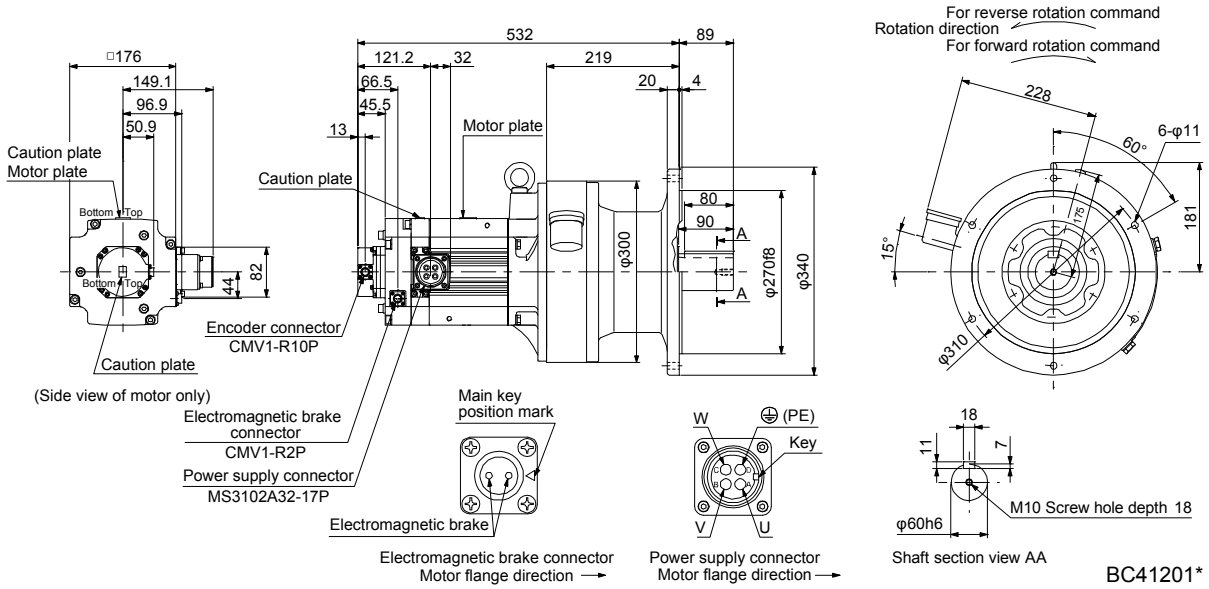

Model	Output [kW]	Reducer model	Reduction ratio	Brake static friction torque [N•m]	Moment of inertia J [× 10^{-4} kg•m^2]	Mass [kg]
HG-SR702BG1	7.0	CHVM-6170	1/11	44	199	151
HG-SR7024BG1			1/17		192	

[Unit: mm]

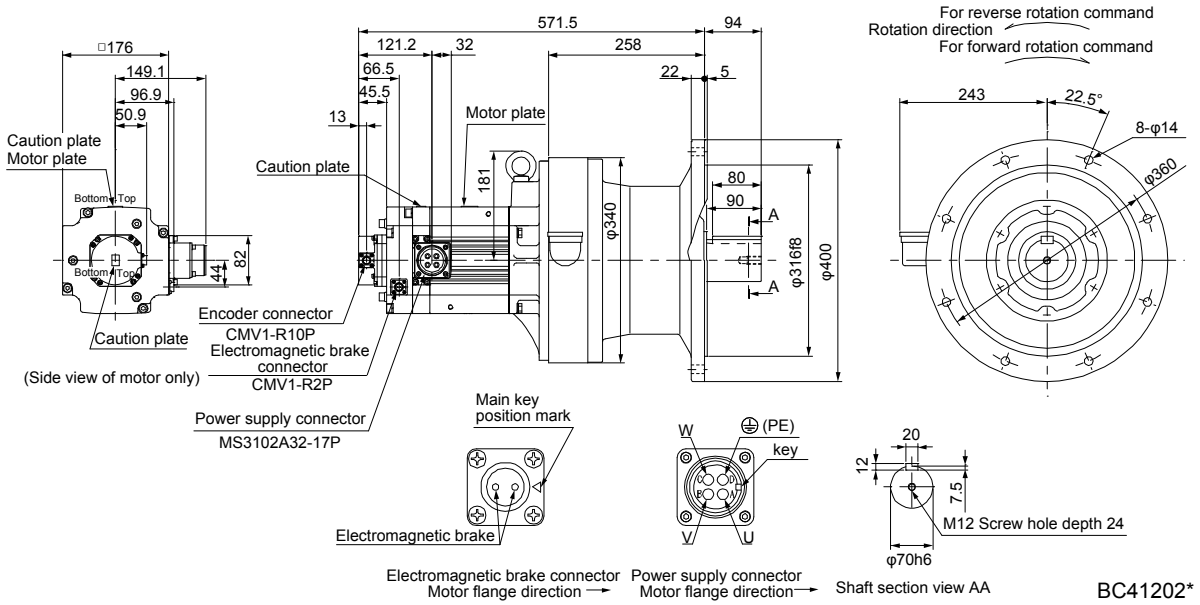

Model	Output [kW]	Reducer model	Reduction ratio	Brake static friction torque [N•m]	Moment of inertia J [× 10^{-4} kg•m^2]	Mass [kg]
HG-SR702BG1	7.0	CHVM-6180	1/29	44	202	178
HG-SR7024BG1			1/35		201	

[Unit: mm]

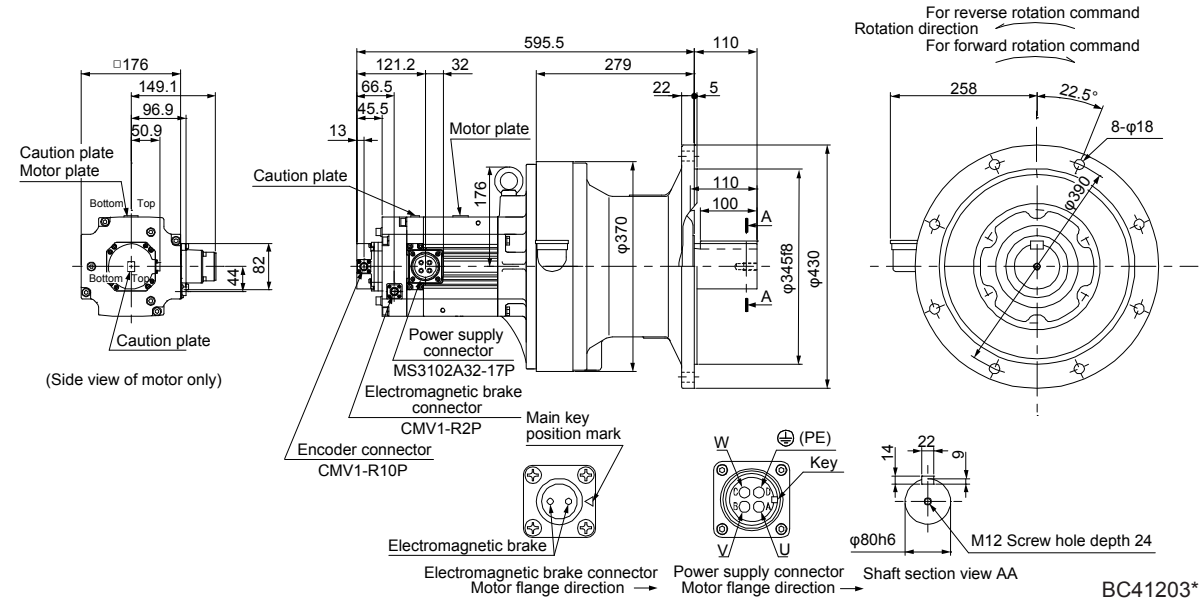

Model	Output [kW]	Reducer model	Reduction ratio	Brake static friction torque [N•m]	Moment of inertia J [× 10^{-4} kg•m^2]	Mass [kg]
HG-SR702BG1	7.0	CHVM-6195	1/43	44	277	246
HG-SR7024BG1			1/59		275	

[Unit: mm]

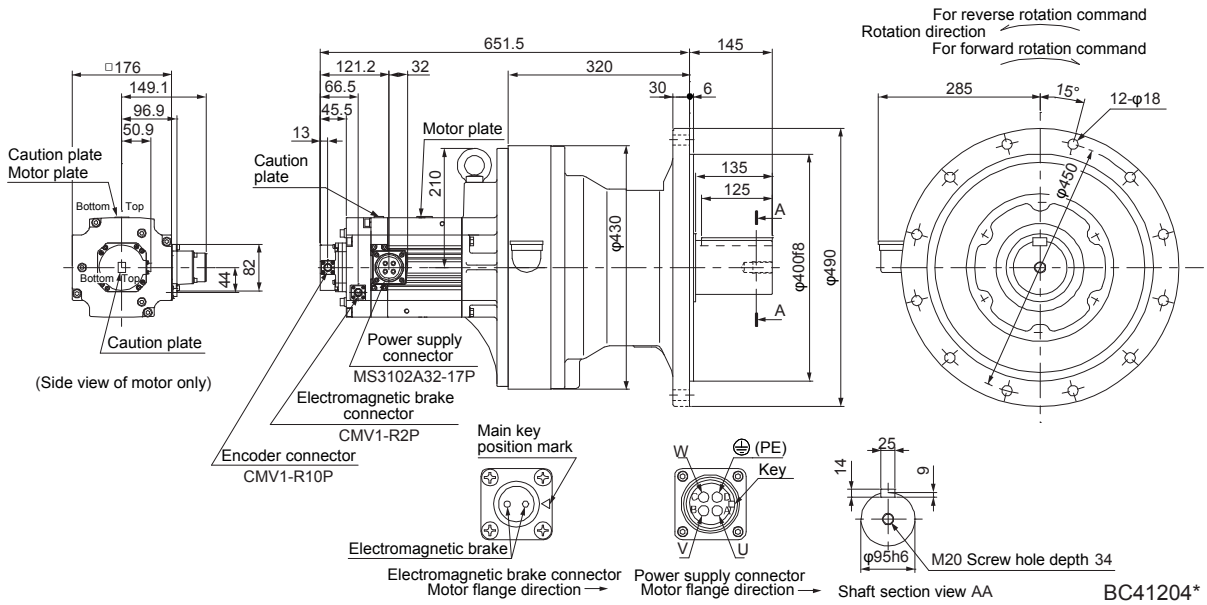

7.7.5 For general industrial machine with a reducer (foot-mounting/without an electromagnetic brake)

Model	Output [kW]	Reducer model	Reduction ratio	Moment of inertia J [× 10^{-4} kg•m^2]	Mass [kg]
HG-SR52G1H HG-SR524G1H	0.5	CNHM-6100	1/6	8.08	20
			1/11	7.65	
			1/17	7.53	
			1/29	7.47	

[Unit: mm]

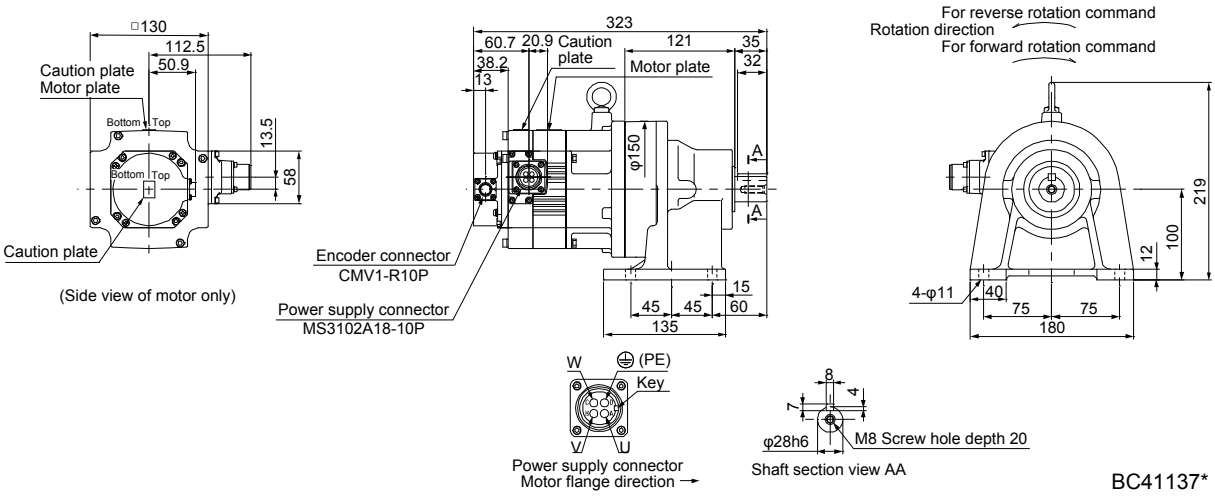

BC41137*

Model	Output [kW]	Reducer model	Reduction ratio	Moment of inertia J [× 10^{-4} kg•m^2]	Mass [kg]
HG-SR52G1H HG-SR524G1H	0.5	CNHM-6120	1/35	8.26	28
			1/43	8.22	
			1/59	8.18	

[Unit: mm]

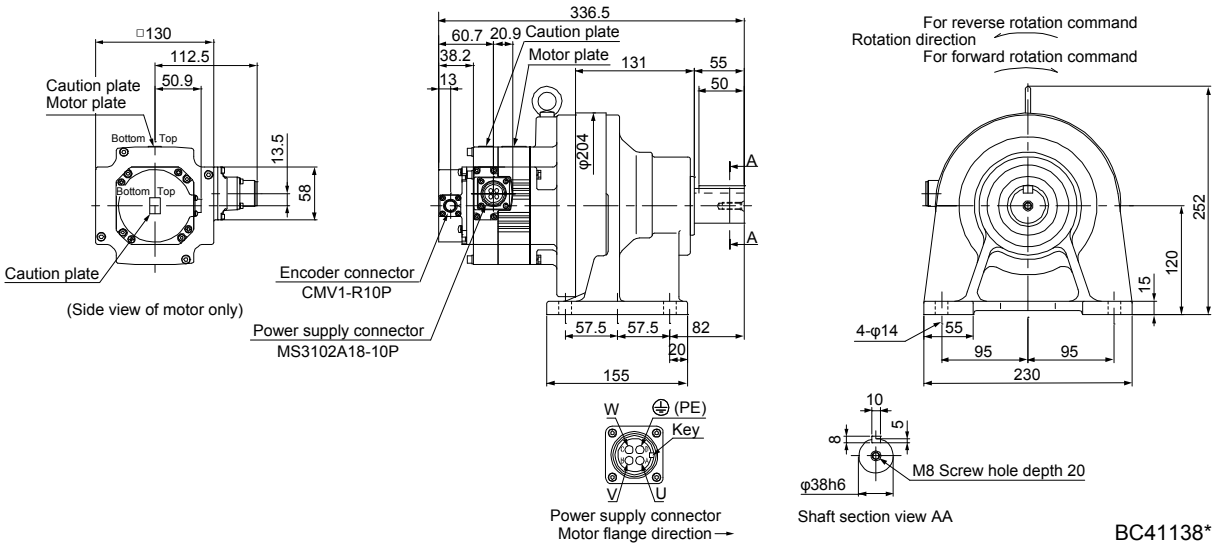

BC41138*

Model	Output [kW]	Reducer model	Reduction ratio	Moment of inertia J [× 10^{-4} kg•m^2]	Mass [kg]
HG-SR102G1H HG-SR1024G1H	1.0	CNHM-6120	1/6	14.8	31
			1/11	13.3	
			1/17	12.9	
			1/29	12.6	
			1/35	12.6	

[Unit: mm]

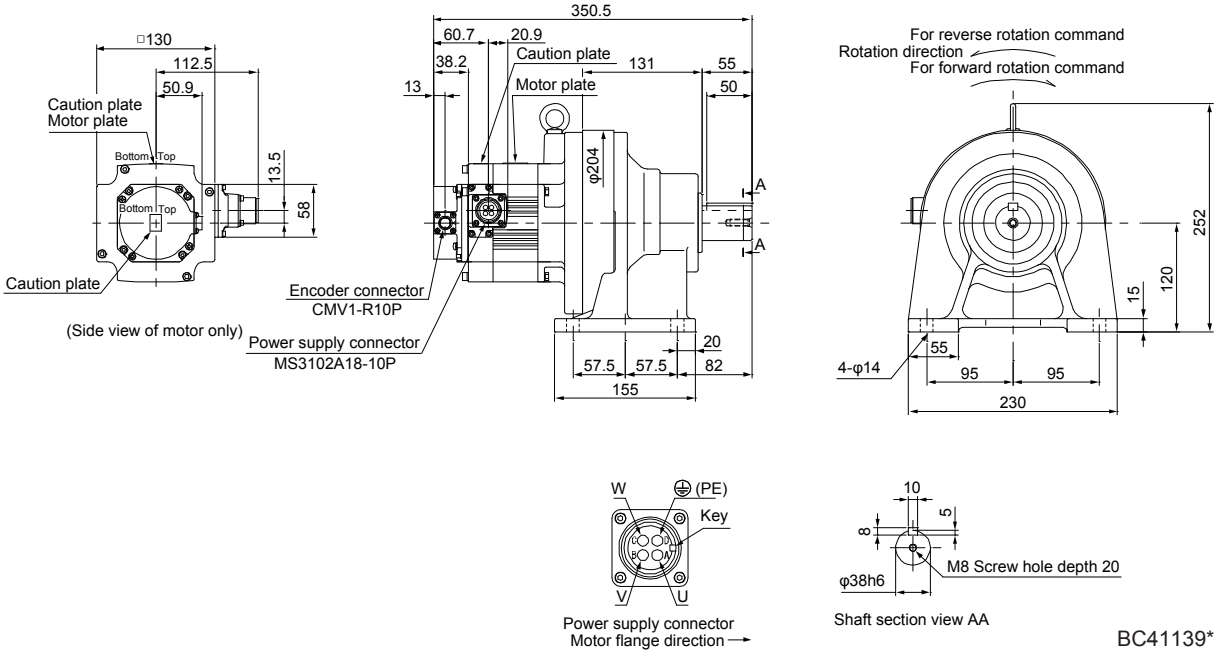

BC41139*

Model	Output [kW]	Reducer model	Reduction ratio	Moment of inertia J [× 10^{-4} kg•m^2]	Mass [kg]
HG-SR102G1H HG-SR1024G1H	1.0	CHHM-6130	1/43	13.8	50

[Unit: mm]

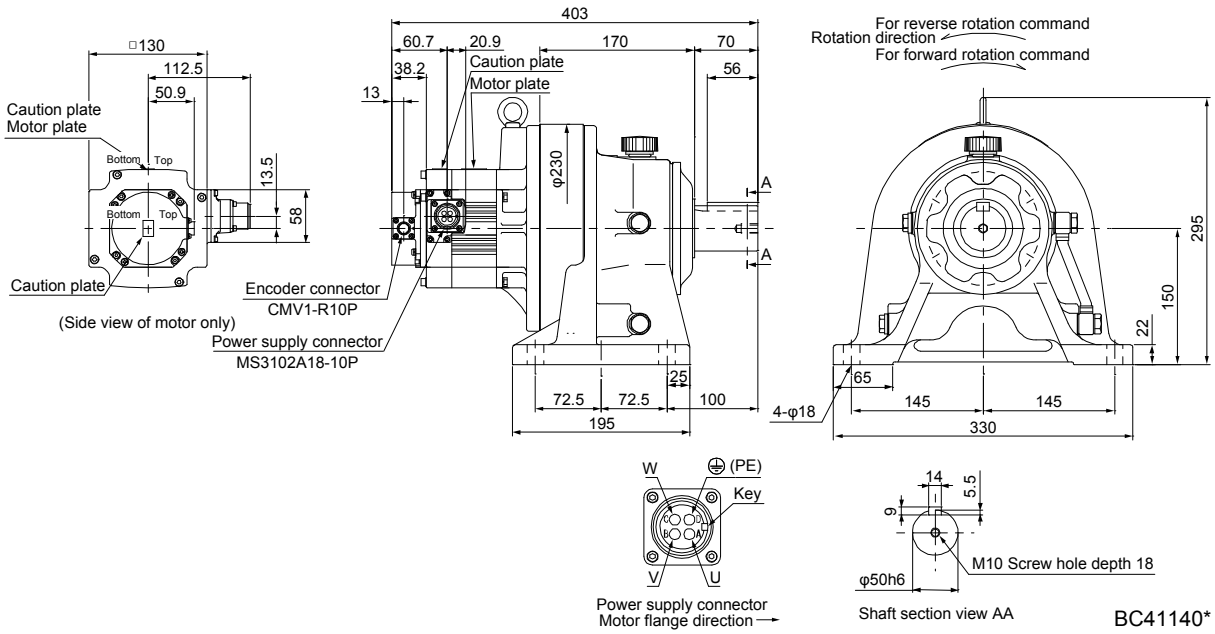

BC41140*

Model	Output [kW]	Reducer model	Reduction ratio	Moment of inertia J [× 10^{-4} kg•m^2]	Mass [kg]
HG-SR102G1H HG-SR1024G1H	1.0	CHHM-6160	1/59	19.1	86

[Unit: mm]

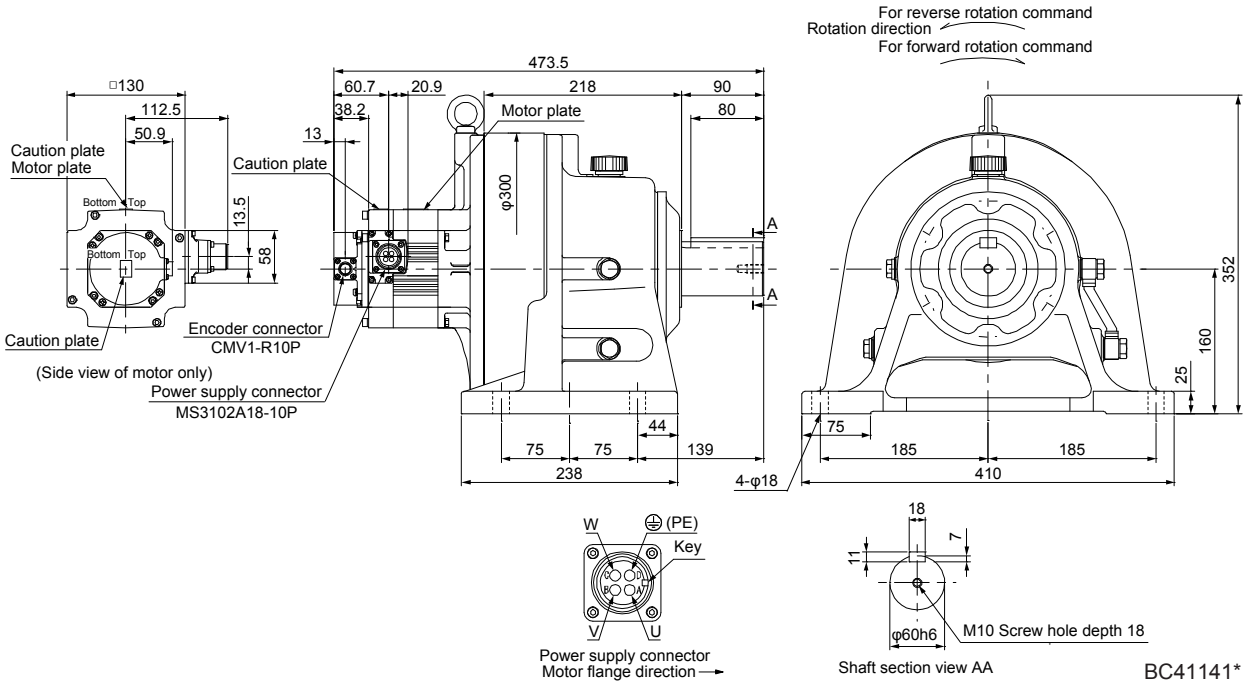

Model	Output [kW]	Reducer model	Reduction ratio	Moment of inertia J [× 10^{-4} kg•m^2]	Mass [kg]
HG-SR152G1H HG-SR1524G1H	1.5	CNHM-6120	1/6	19.2	32
			1/11	17.7	
			1/17	17.3	

[Unit: mm]

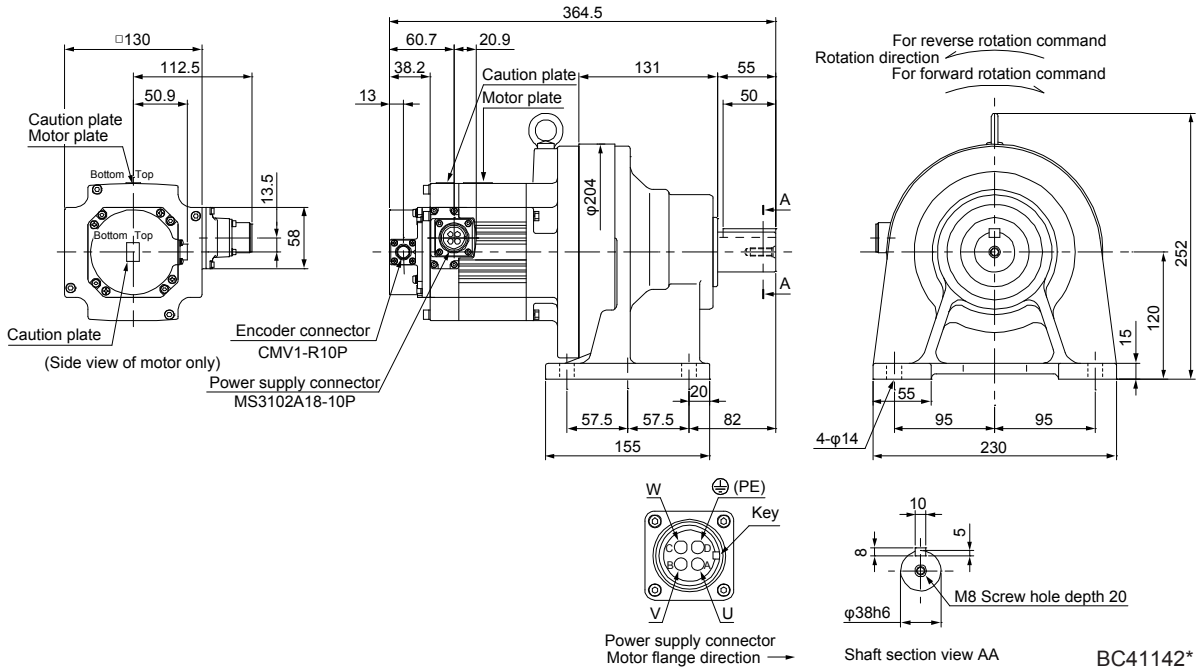

Model	Output [kW]	Reducer model	Reduction ratio	Moment of inertia J [× 10^{-4} kg•m^2]	Mass [kg]
HG-SR152G1H	1.5	CHHM-6130	1/29	18.4	51
HG-SR1524G1H			1/35	18.3	

[Unit: mm]

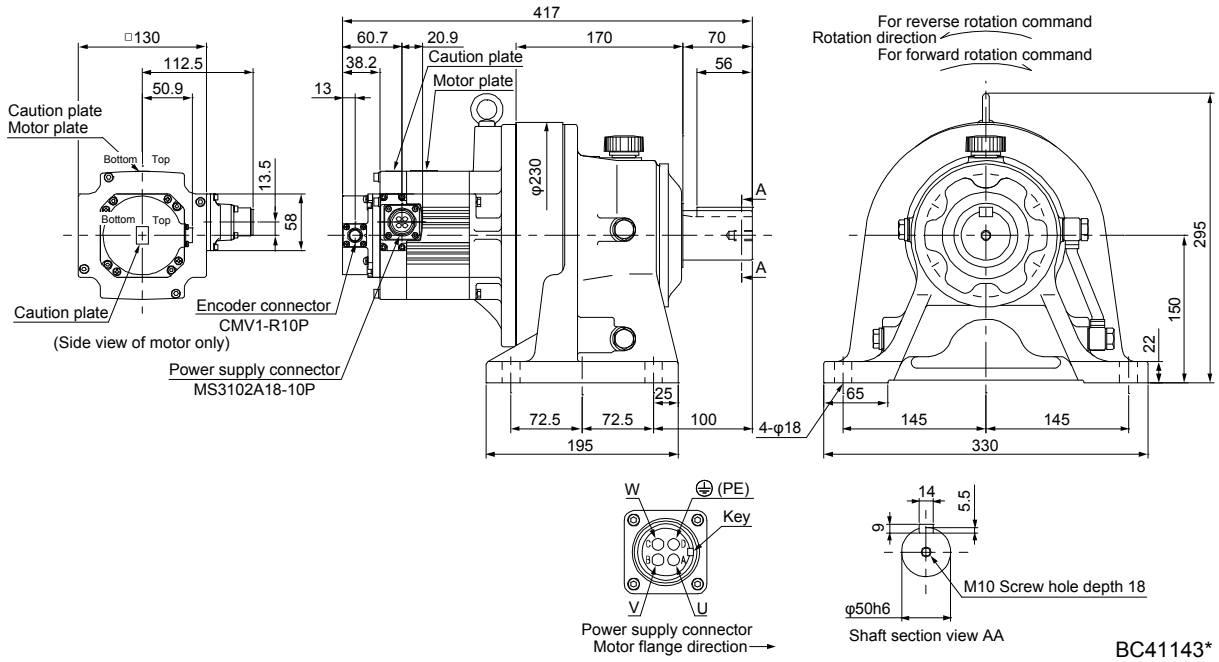

BC41143*

Model	Output [kW]	Reducer model	Reduction ratio	Moment of inertia J [× 10^{-4} kg•m^2]	Mass [kg]
HG-SR152G1H	1.5	CHHM-6160	1/43	23.6	87
HG-SR1524G1H			1/59	23.5	

[Unit: mm]

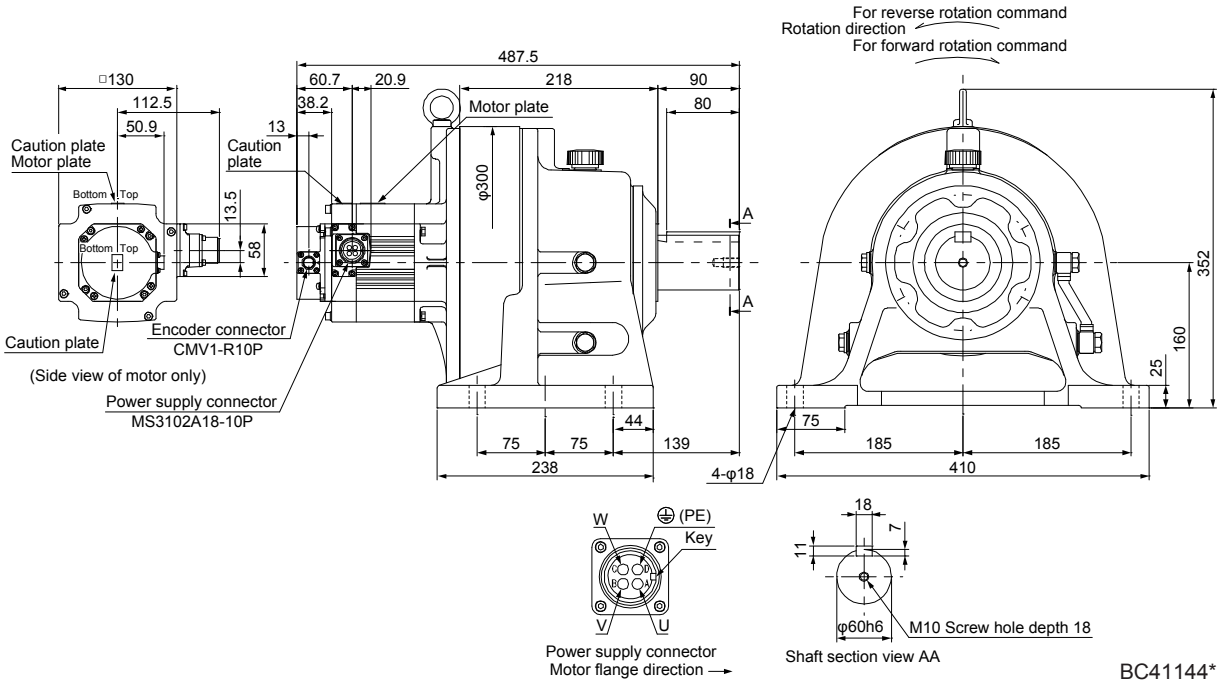

BC41144*

Model	Output [kW]	Reducer model	Reduction ratio	Moment of inertia J [× 10^{-4} kg•m^2]	Mass [kg]
HG-SR202G1H HG-SR2024G1H	2.0	CNHM-6120	1/6	50.0	37
			1/11	48.4	
			1/17	48.1	

[Unit: mm]

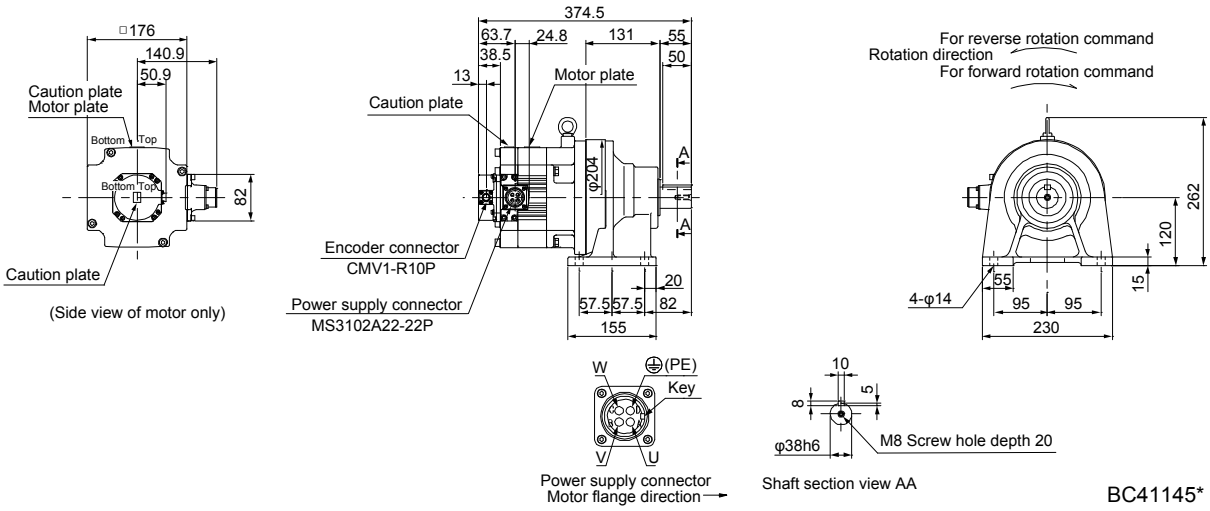

BC41145*

Model	Output [kW]	Reducer model	Reduction ratio	Moment of inertia J [× 10^{-4} kg•m^2]	Mass [kg]
HG-SR202G1H HG-SR2024G1H	2.0	CHHM-6165	1/29	54.8	92
			1/35	54.5	
			1/43	54.3	
			1/59	54.2	

[Unit: mm]

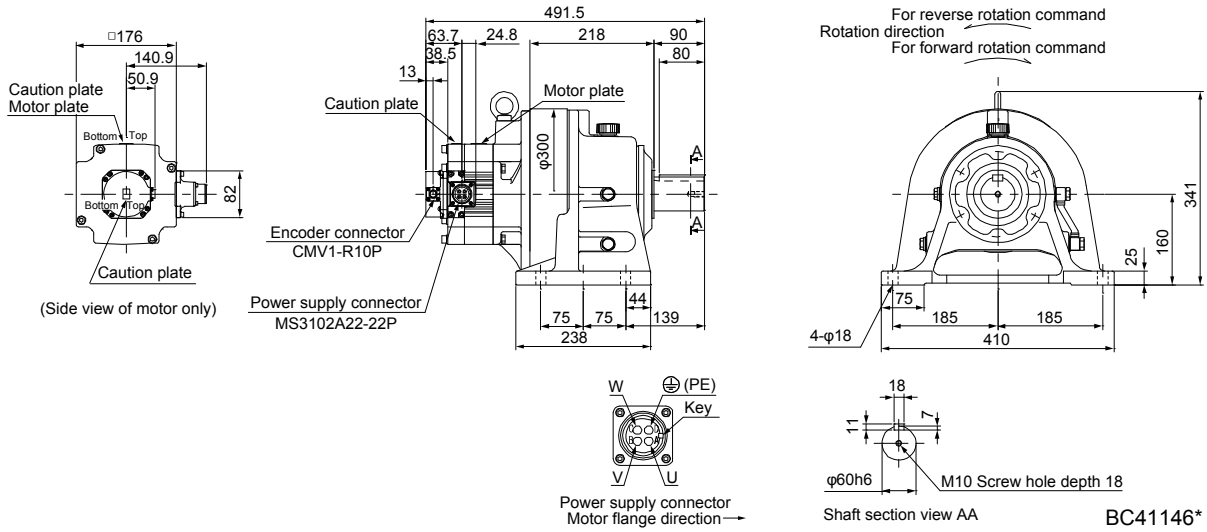

BC41146*

Model	Output [kW]	Reducer model	Reduction ratio	Moment of inertia J [× 10^{-4} kg•m^2]	Mass [kg]
HG-SR352G1H HG-SR3524G1H	3.5	CHHM-6135	1/6	87.1	61
			1/11	82.8	
			1/17	81.5	

[Unit: mm]

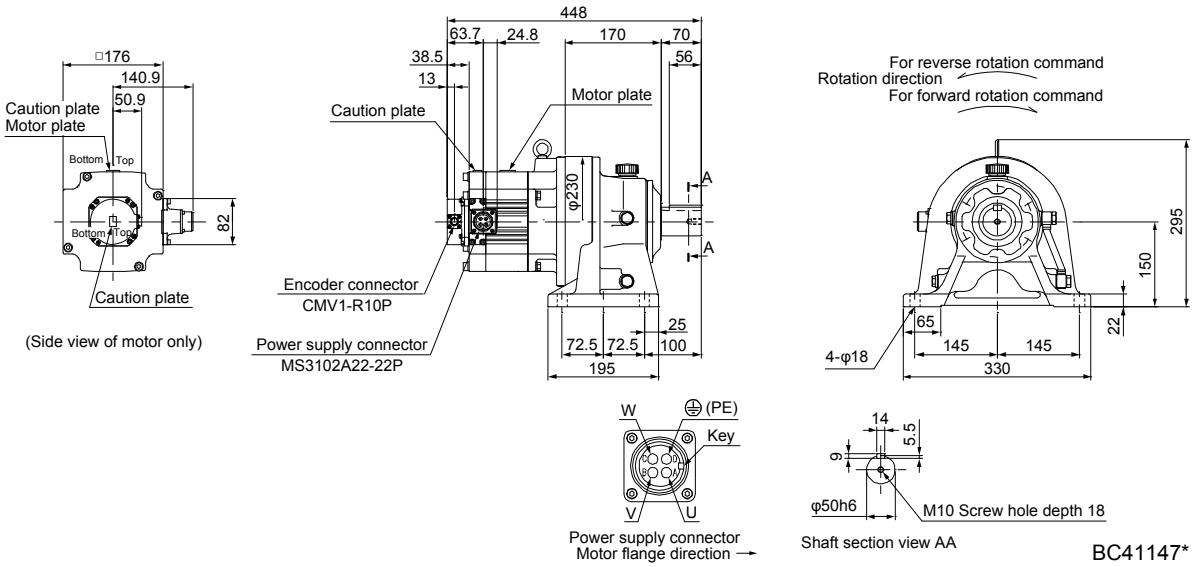

BC41147*

Model	Output [kW]	Reducer model	Reduction ratio	Moment of inertia J [× 10^{-4} kg•m^2]	Mass [kg]
HG-SR352G1H HG-SR3524G1H	3.5	CHHM-6165	1/29	86.6	97
			1/35	86.3	

[Unit: mm]

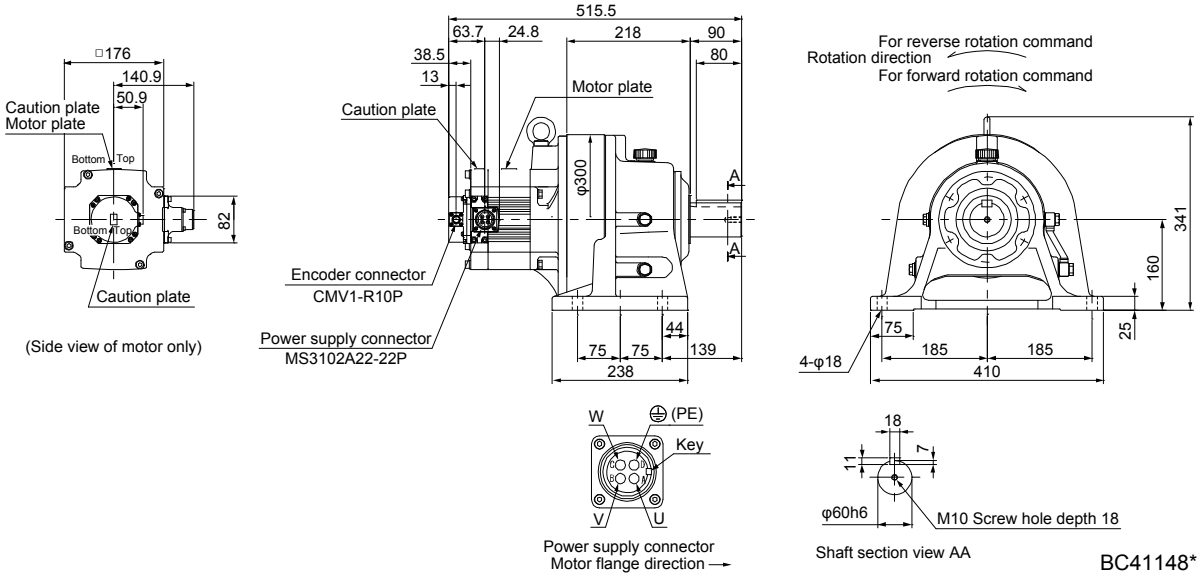

BC41148*

Model	Output [kW]	Reducer model	Reduction ratio	Moment of inertia J [× 10^{-4} kg•m^2]	Mass [kg]
HG-SR352G1H HG-SR3524G1H	3.5	CHHM-6175	1/43	105	137
			1/59	104	

[Unit: mm]

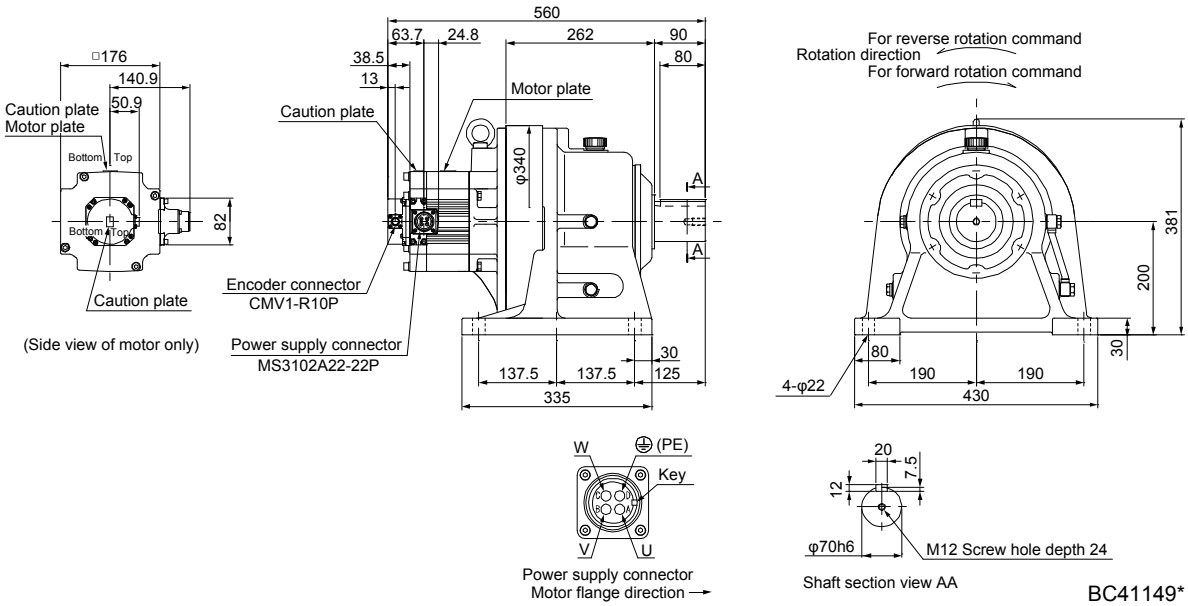

BC41149*

Model	Output [kW]	Reducer model	Reduction ratio	Moment of inertia J [× 10^{-4} kg•m^2]	Mass [kg]
HG-SR502G1H HG-SR5024G1H	5.0	CHHM-6165	1/6	126	101
			1/11	114	
			1/17	110	

[Unit: mm]

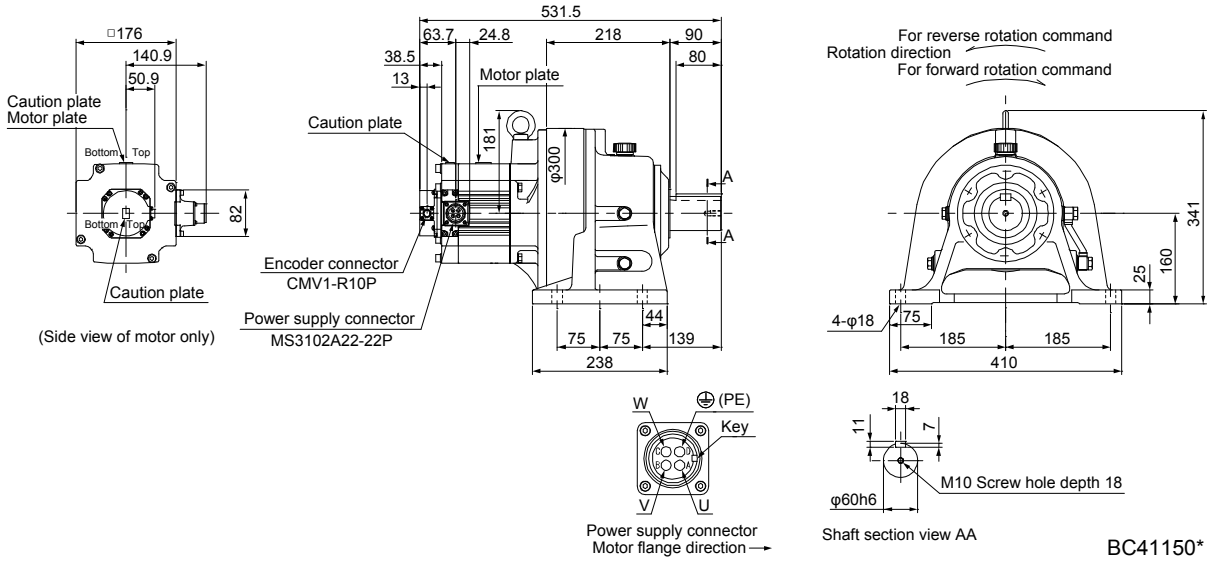

BC41150*

Model	Output [kW]	Reducer model	Reduction ratio	Moment of inertia J [× 10^{-4} kg•m^2]	Mass [kg]
HG-SR502G1H HG-SR5024G1H	5.0	CHHM-6180	1/29	141	178
			1/35	140	
			1/43	139	

[Unit: mm]

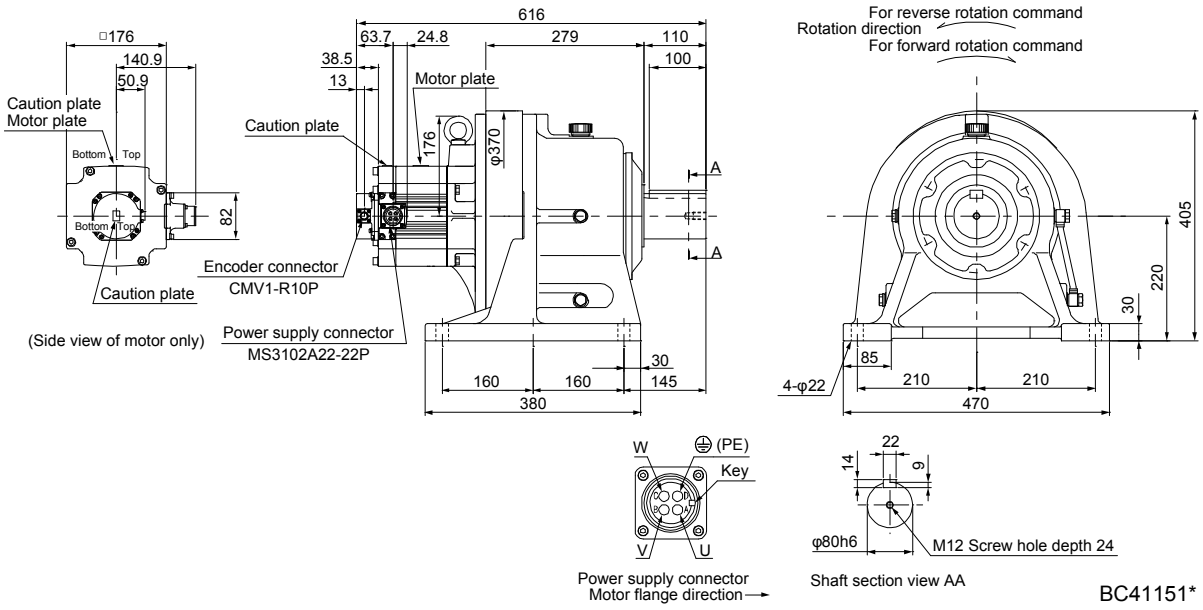

BC41151*

Model	Output [kW]	Reducer model	Reduction ratio	Moment of inertia J [× 10^{-4} kg•m^2]	Mass [kg]
HG-SR502G1H HG-SR5024G1H	5.0	CHHM-6185	1/59	138	178

[Unit: mm]

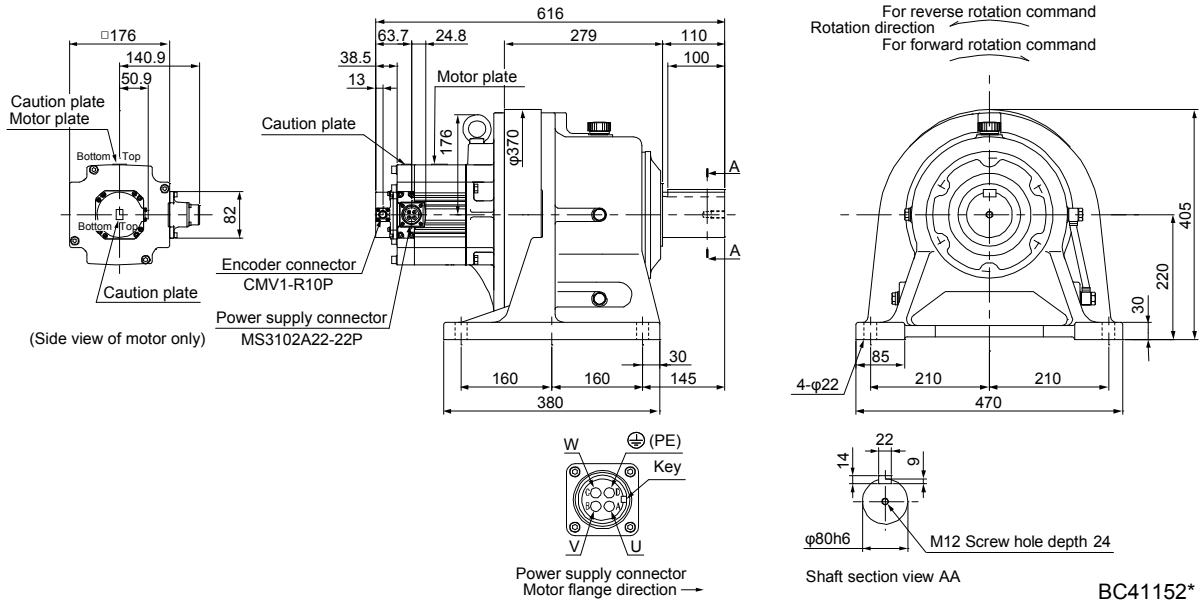

BC41152*

Model	Output [kW]	Reducer model	Reduction ratio	Moment of inertia J [× 10^{-4} kg•m^2]	Mass [kg]
HG-SR702G1H HG-SR7024G1H	7.0	CHHM-6165	1/6	177	108

[Unit: mm]

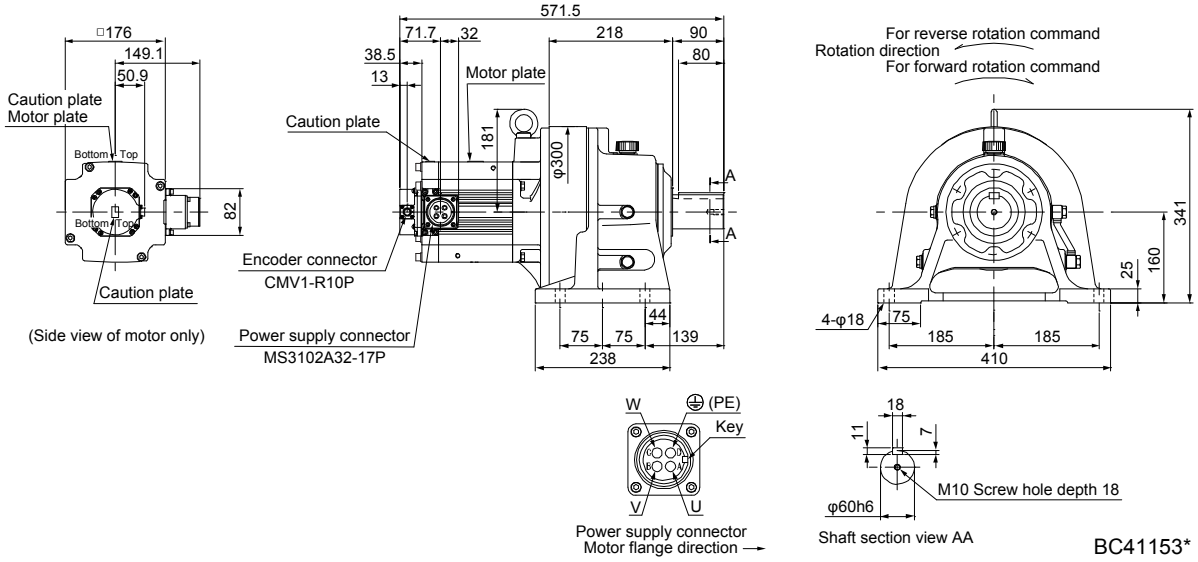

Model	Output [kW]	Reducer model	Reduction ratio	Moment of inertia J [× 10^{-4} kg•m^2]	Mass [kg]
HG-SR702G1H HG-SR7024G1H	7.0	CHHM-6170	1/11	190	148
			1/17	182	

[Unit: mm]

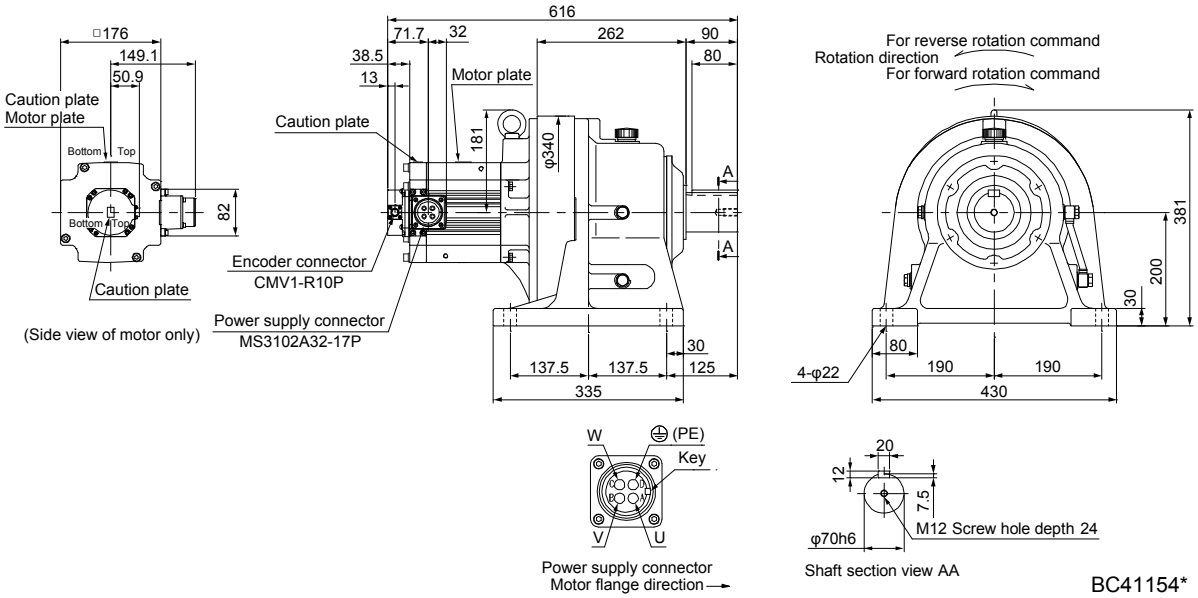

Model	Output [kW]	Reducer model	Reduction ratio	Moment of inertia J [× 10^{-4} kg•m^2]	Mass [kg]
HG-SR702G1H	7.0	CHHM-6180	1/29	192	185
HG-SR7024G1H			1/35	192	

[Unit: mm]

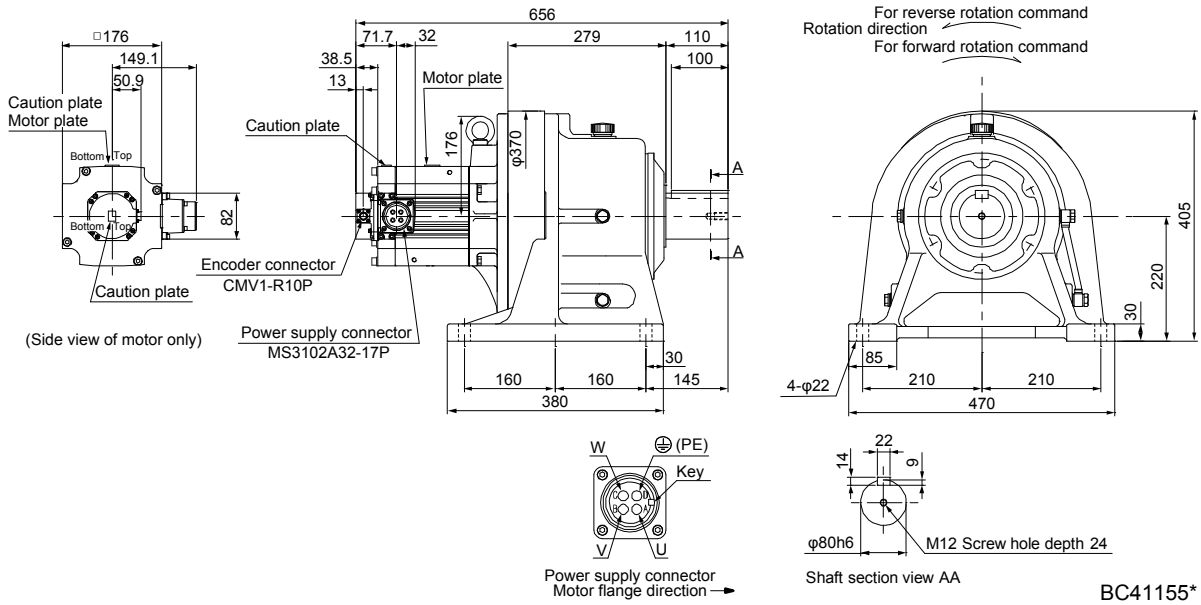

BC41155*

Model	Output [kW]	Reducer model	Reduction ratio	Moment of inertia J [× 10^{-4} kg•m^2]	Mass [kg]
HG-SR702G1H	7.0	CHHM-6180	1/43	267	256
HG-SR7024G1H			1/59	266	

[Unit: mm]

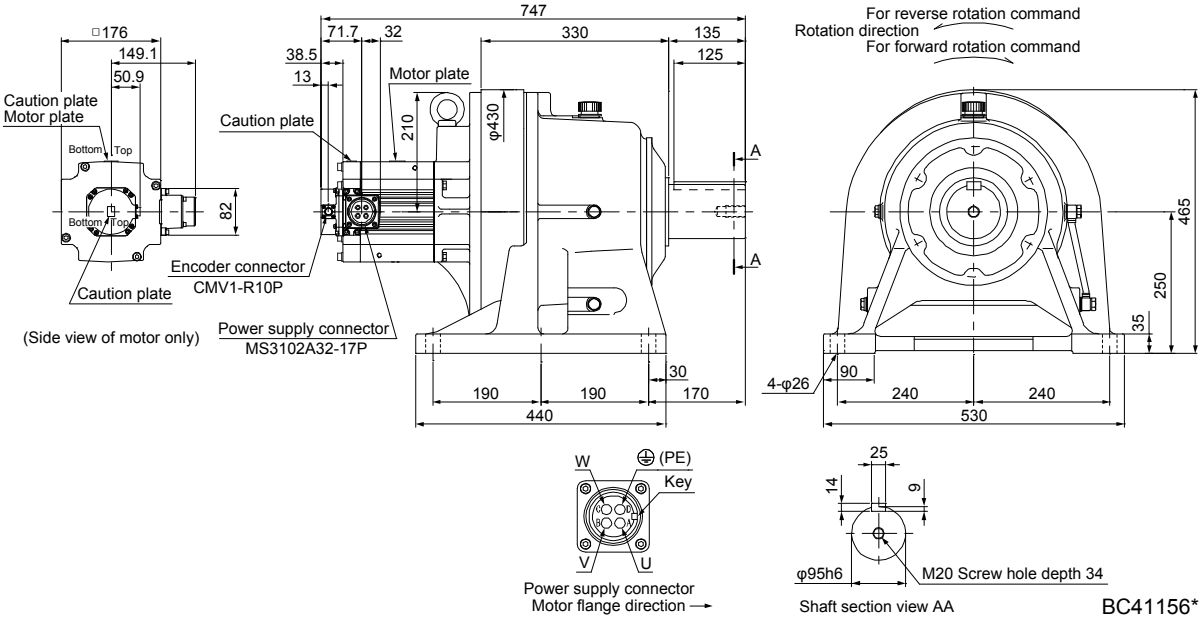

BC41156*

7.7.6 For general industrial machine with a reducer (foot-mounting/with an electromagnetic brake)

Model	Output [kW]	Reducer model	Reduction ratio	Brake static friction torque [N•m]	Moment of inertia J [× 10^{-4} kg•m^2]	Mass [kg]
HG-SR52BG1H HG-SR524BG1H	0.5	CNHM-6100	1/6	8.5	10.3	22
			1/11		9.85	
			1/17		9.73	
			1/29		9.67	

[Unit: mm]

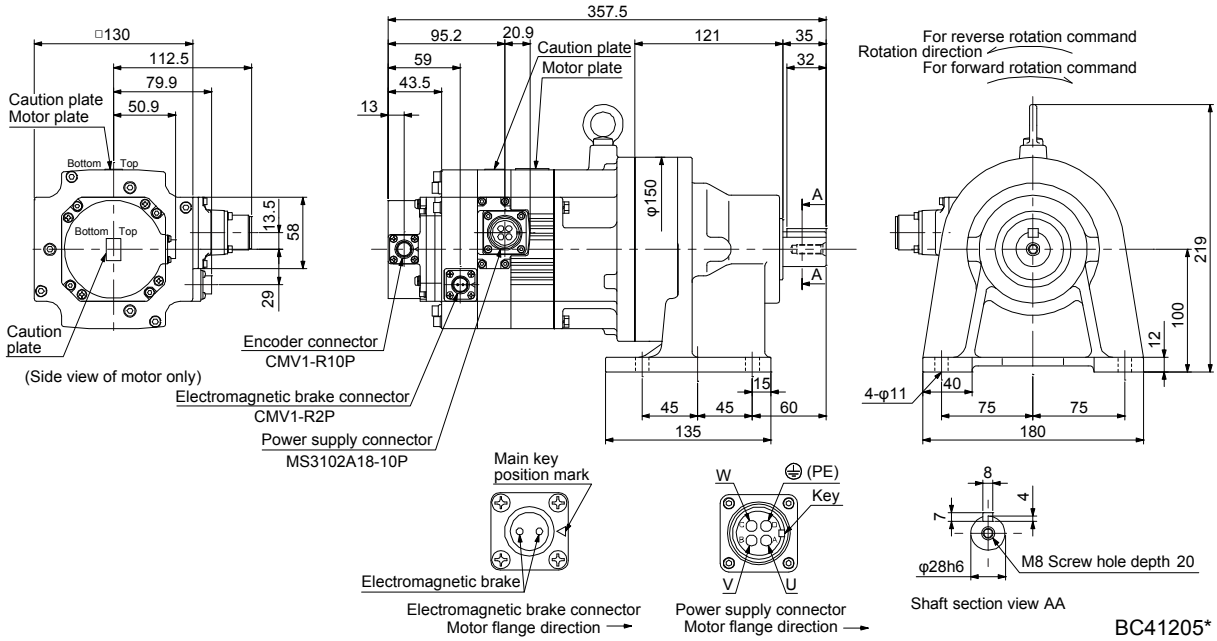

Model	Output [kW]	Reducer model	Reduction ratio	Brake static friction torque [N•m]	Moment of inertia J [× 10^{-4} kg•m^2]	Mass [kg]
HG-SR52BG1H HG-SR524BG1H	0.5	CNHM-6120	1/35	8.5	10.5	30
			1/43		10.4	
			1/59		10.4	

[Unit: mm]

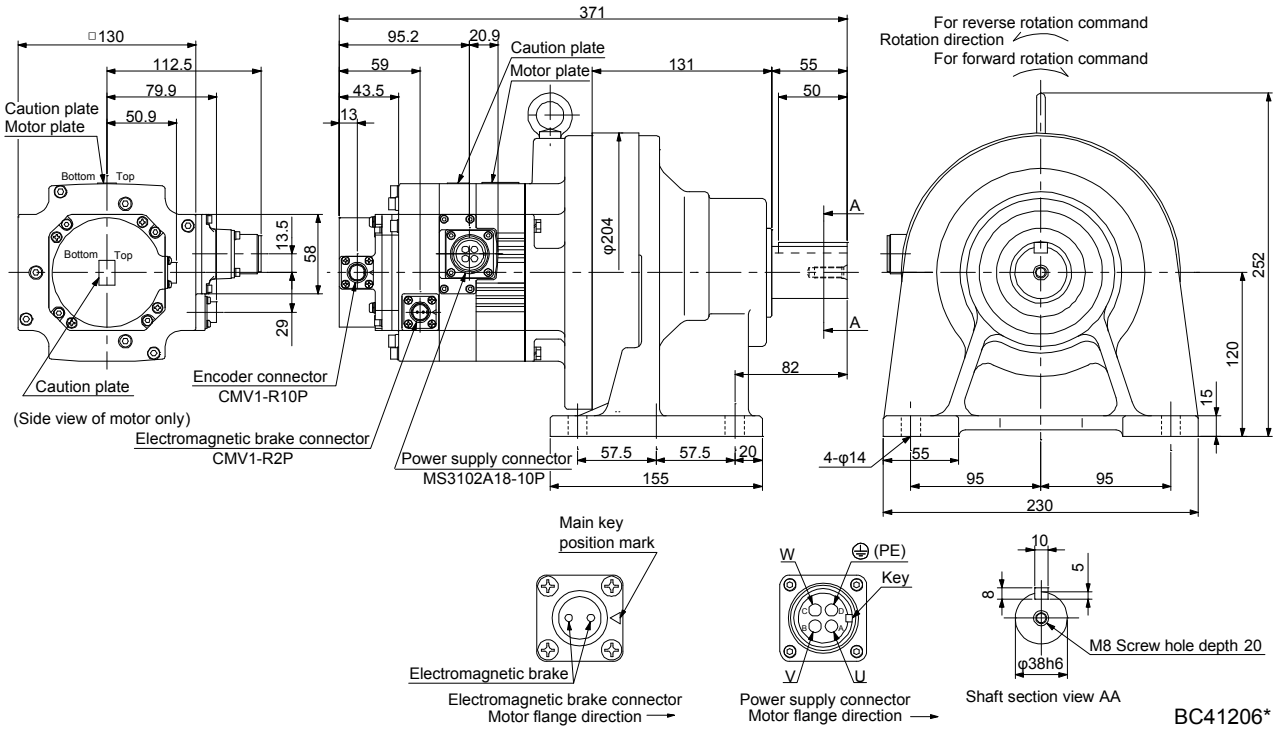

Model	Output [kW]	Reducer model	Reduction ratio	Brake static friction torque [N•m]	Moment of inertia J [× 10^{-4} kg•m^2]	Mass [kg]
HG-SR102BG1H HG-SR1024BG1H	1.0	CNHM-6120	1/6	8.5	17.0	33
			1/11		15.5	
			1/17		15.1	
			1/29		14.8	
			1/35		14.8	

[Unit: mm]

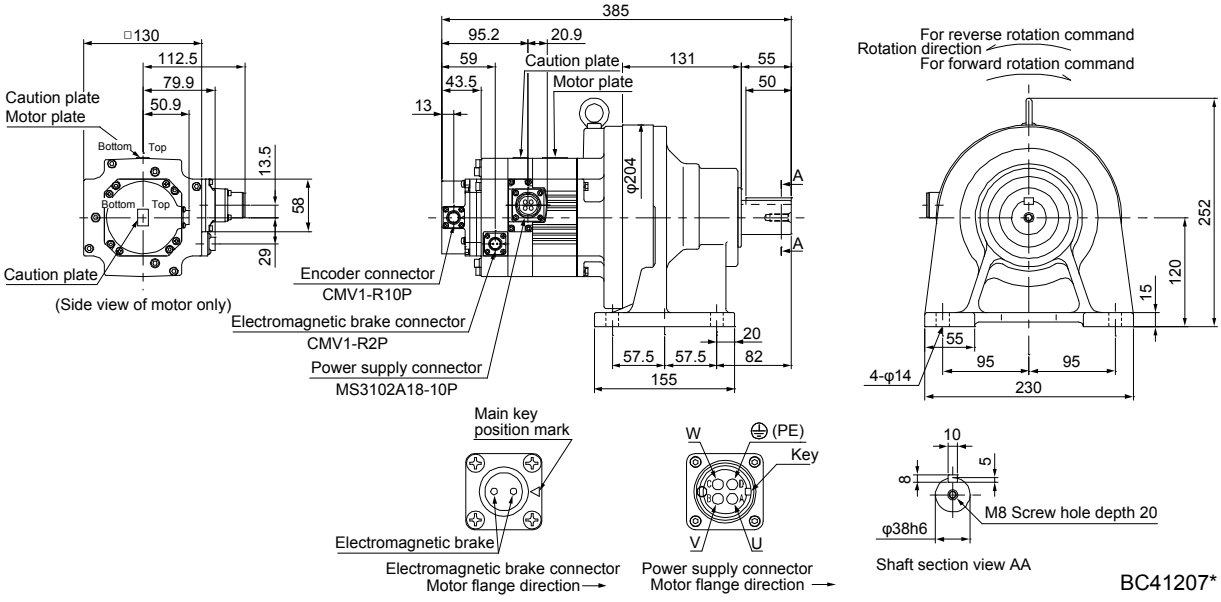

Model	Output [kW]	Reducer model	Reduction ratio	Brake static friction torque [N•m]	Moment of inertia J [× 10^{-4} kg•m^2]	Mass [kg]
HG-SR102BG1H HG-SR1024BG1H	1.0	CHHM-6130	1/43	8.5	16.0	52

[Unit: mm]

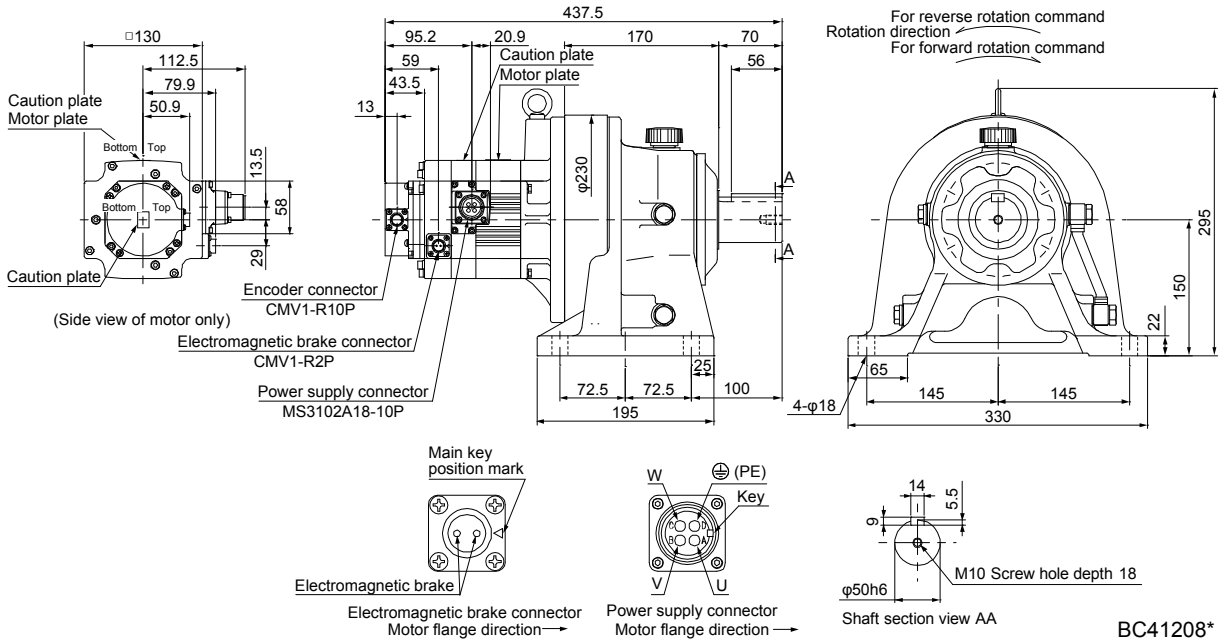

Model	Output [kW]	Reducer model	Reduction ratio	Brake static friction torque [N•m]	Moment of inertia J [× 10^{-4} kg•m^2]	Mass [kg]
HG-SR102BG1H HG-SR1024BG1H	1.0	CHHM-6160	1/59	8.5	21.3	88

[Unit: mm]

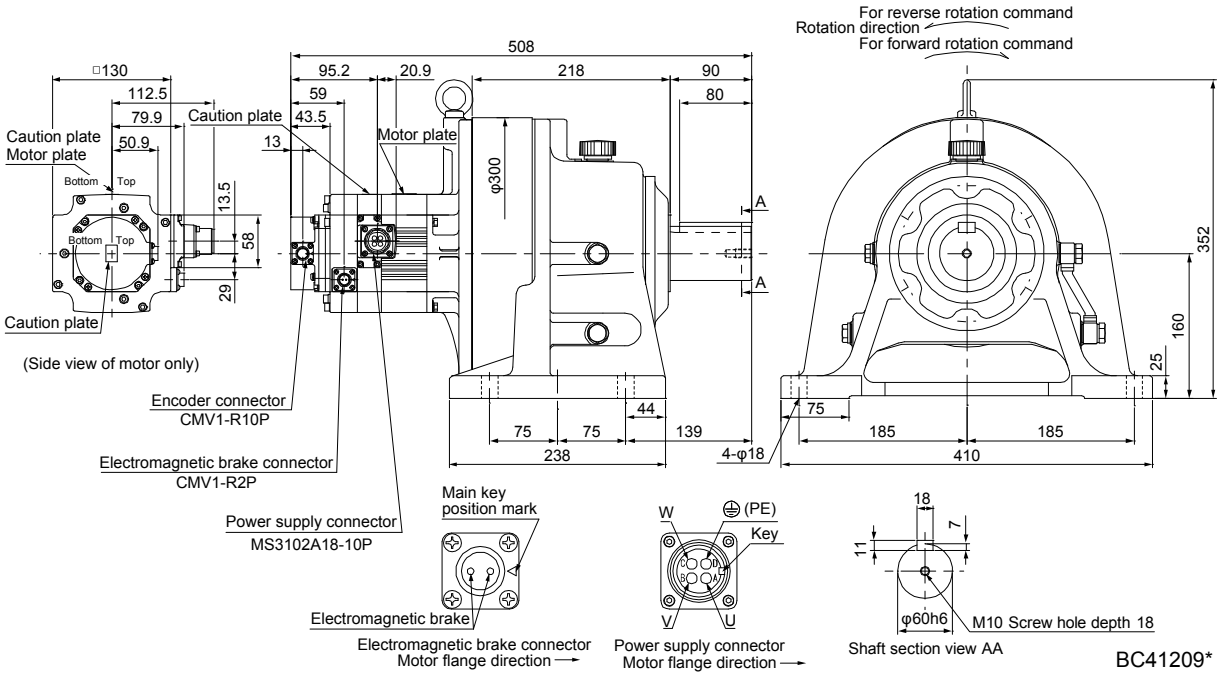

Model	Output [kW]	Reducer model	Reduction ratio	Brake static friction torque [N•m]	Moment of inertia J [× 10^{-4} kg•m^2]	Mass [kg]
HG-SR152BG1H HG-SR1524BG1H	1.5	CNHM-6120	1/6	8.5	21.4	34
			1/11		19.9	
			1/17		19.5	

[Unit: mm]

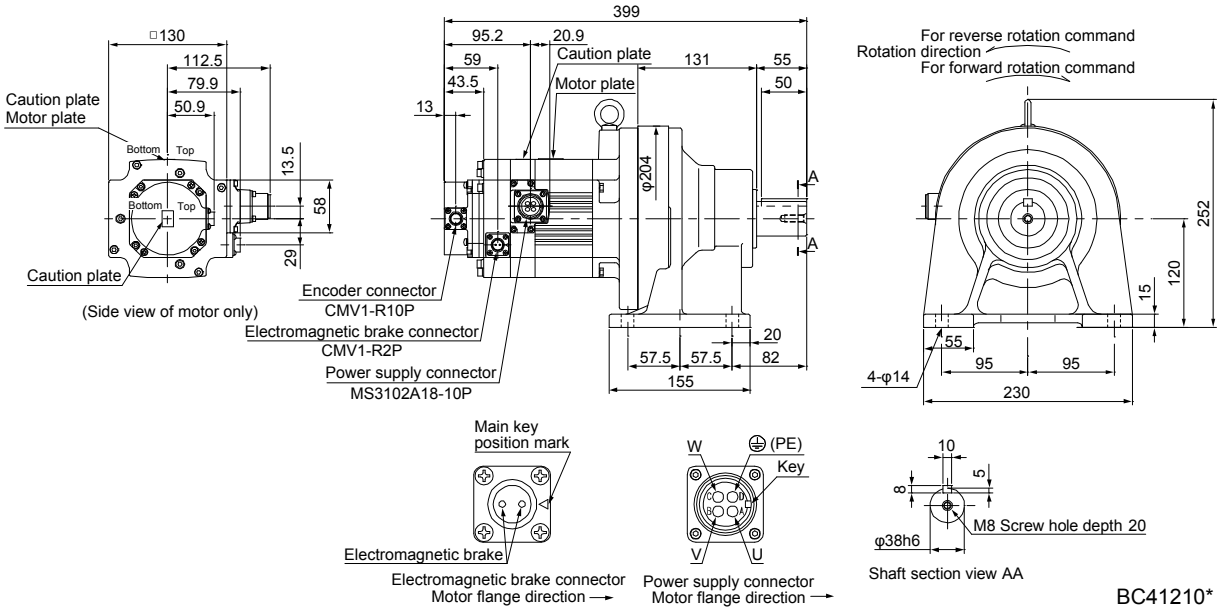

Model	Output [kW]	Reducer model	Reduction ratio	Brake static friction torque [N•m]	Moment of inertia J [× 10^{-4} kg•m^2]	Mass [kg]
HG-SR152BG1H	1.5	CHHM-6130	1/29	8.5	20.6	53
HG-SR1524BG1H			1/35		20.5	

[Unit: mm]

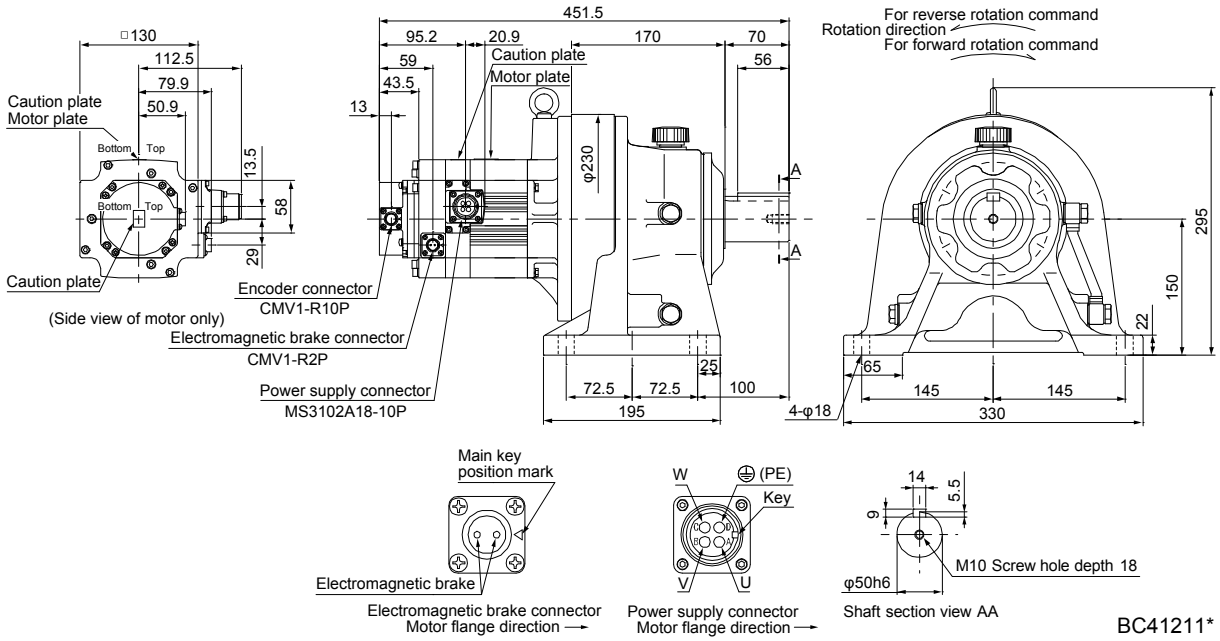

BC41211*

Model	Output [kW]	Reducer model	Reduction ratio	Brake static friction torque [N•m]	Moment of inertia J [× 10^{-4} kg•m^2]	Mass [kg]
HG-SR152BG1H	1.5	CHHM-6160	1/43	8.5	25.8	89
HG-SR1524BG1H			1/59		25.7	

[Unit: mm]

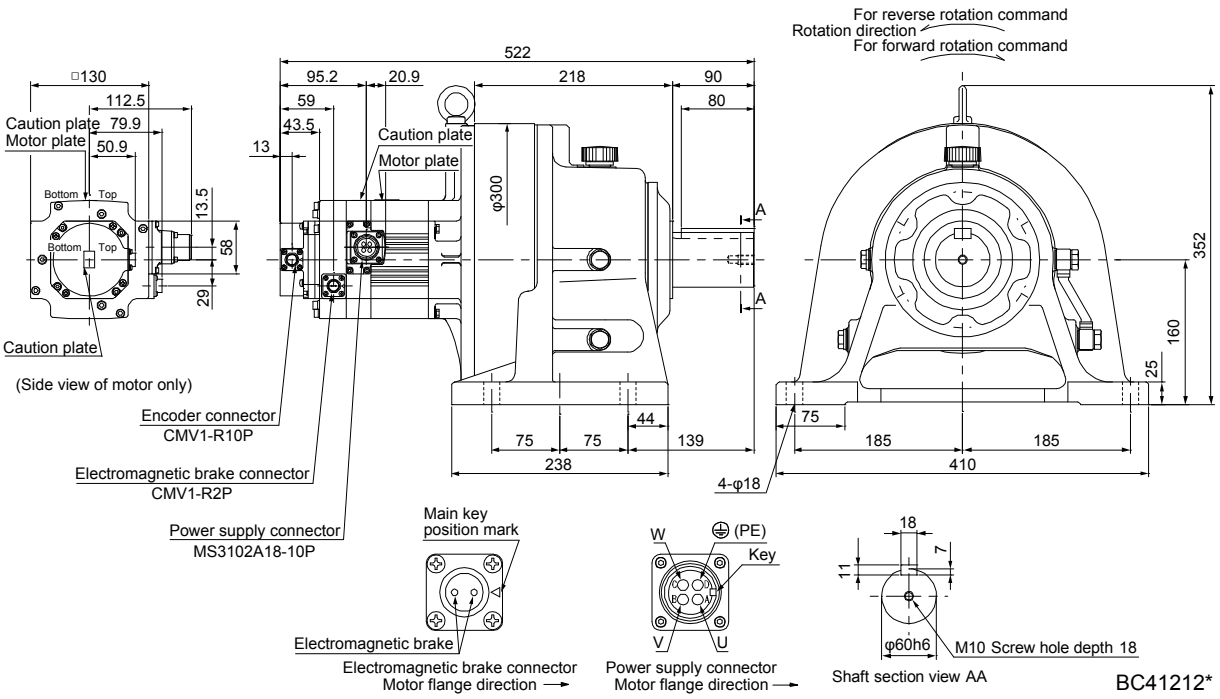

BC41212*

Model	Output [kW]	Reducer model	Reduction ratio	Brake static friction torque [N•m]	Moment of inertia J [× 10^{-4} kg•m^2]	Mass [kg]
HG-SR202BG1H HG-SR2024BG1H	2.0	CNHM-6120	1/6	44	59.4	43
			1/11		57.8	
			1/17		57.5	

[Unit: mm]

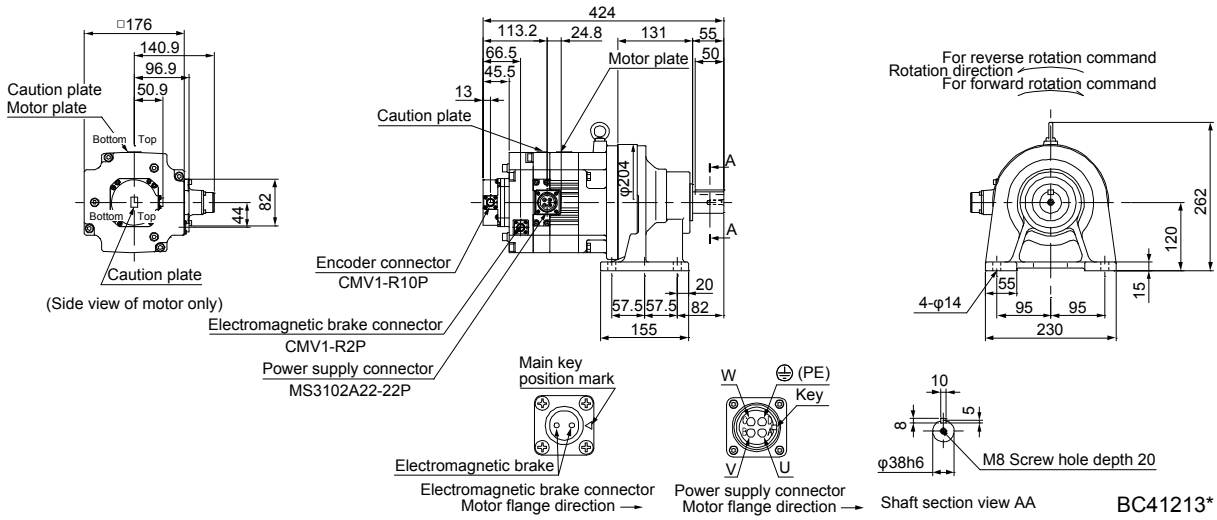

Model	Output [kW]	Reducer model	Reduction ratio	Brake static friction torque [N•m]	Moment of inertia J [× 10^{-4} kg•m^2]	Mass [kg]
HG-SR202BG1H HG-SR2024BG1H	2.0	CHHM-6165	1/29	44	64.2	98
			1/35		63.9	
			1/43		63.7	
			1/59		63.6	

[Unit: mm]

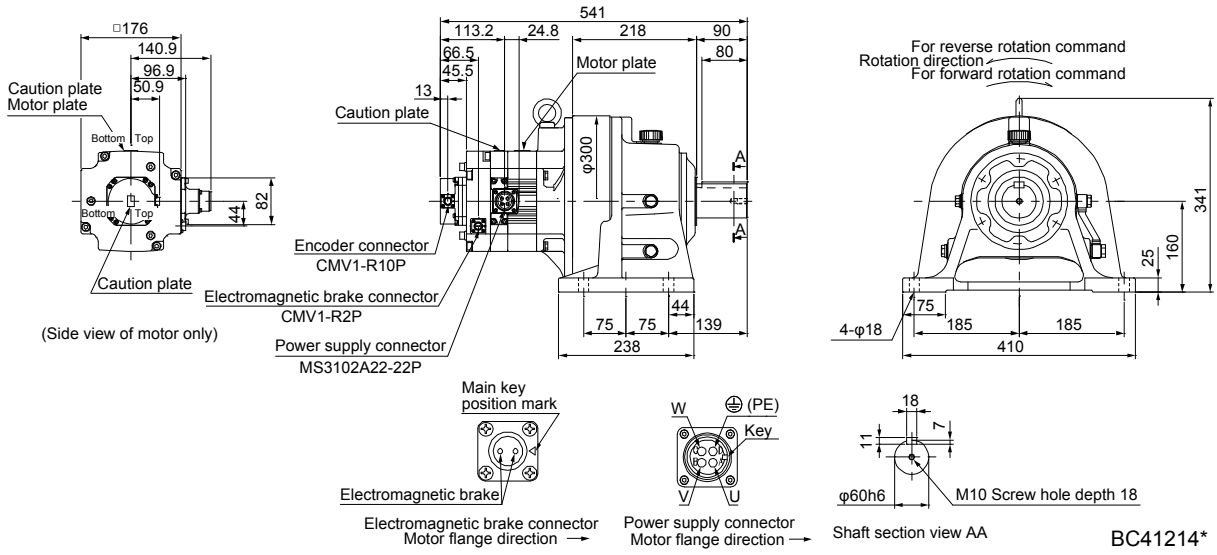

Model	Output [kW]	Reducer model	Reduction ratio	Brake static friction torque [N•m]	Moment of inertia J [× 10^{-4} kg•m^2]	Mass [kg]
HG-SR352BG1H HG-SR3524BG1H	3.5	CHHM-6135	1/6	44	96.5	67
			1/11		92.2	
			1/17		90.9	

[Unit: mm]

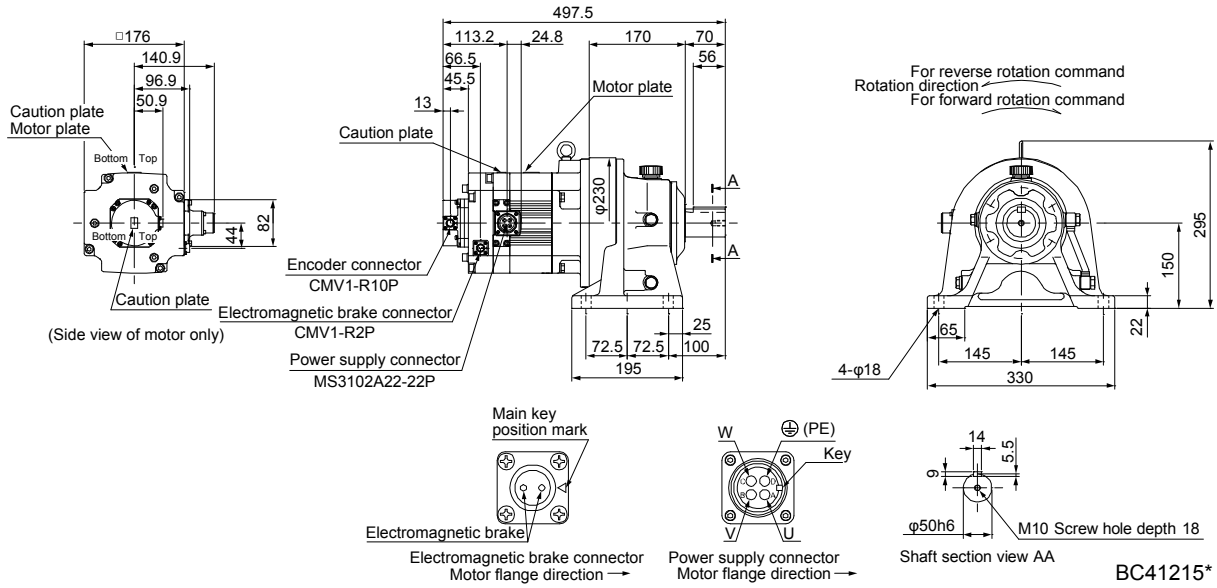

Model	Output [kW]	Reducer model	Reduction ratio	Brake static friction torque [N•m]	Moment of inertia J [× 10^{-4} kg•m^2]	Mass [kg]
HG-SR352BG1H HG-SR3524BG1H	3.5	CHHM-6165	1/29	44	96.0	103
			1/35		95.7	

[Unit: mm]

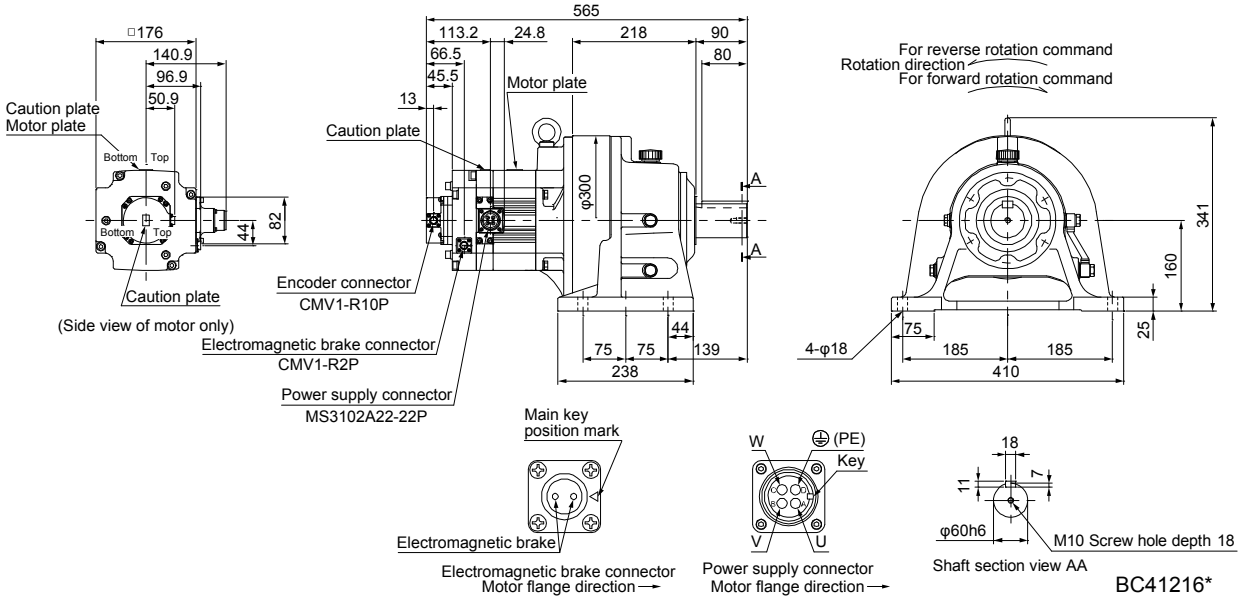

Model	Output [kW]	Reducer model	Reduction ratio	Brake static friction torque [N•m]	Moment of inertia J [× 10^{-4} kg•m^2]	Mass [kg]
HG-SR352BG1H HG-SR3524BG1H	3.5	CHHM-6175	1/43	44	114	143
			1/59		113	

[Unit: mm]

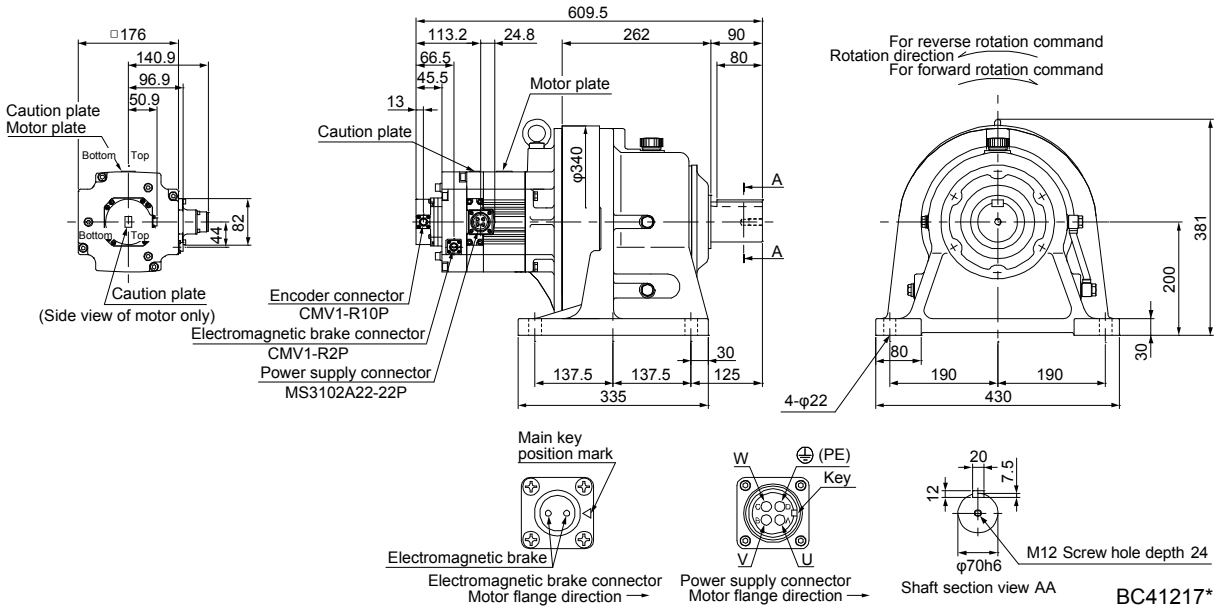

Model	Output [kW]	Reducer model	Reduction ratio	Brake static friction torque [N•m]	Moment of inertia J [× 10^{-4} kg•m^2]	Mass [kg]
HG-SR502BG1H HG-SR5024BG1H	5.0	CHHM-6165	1/6	44	135	107
			1/11		123	
			1/17		119	

[Unit: mm]

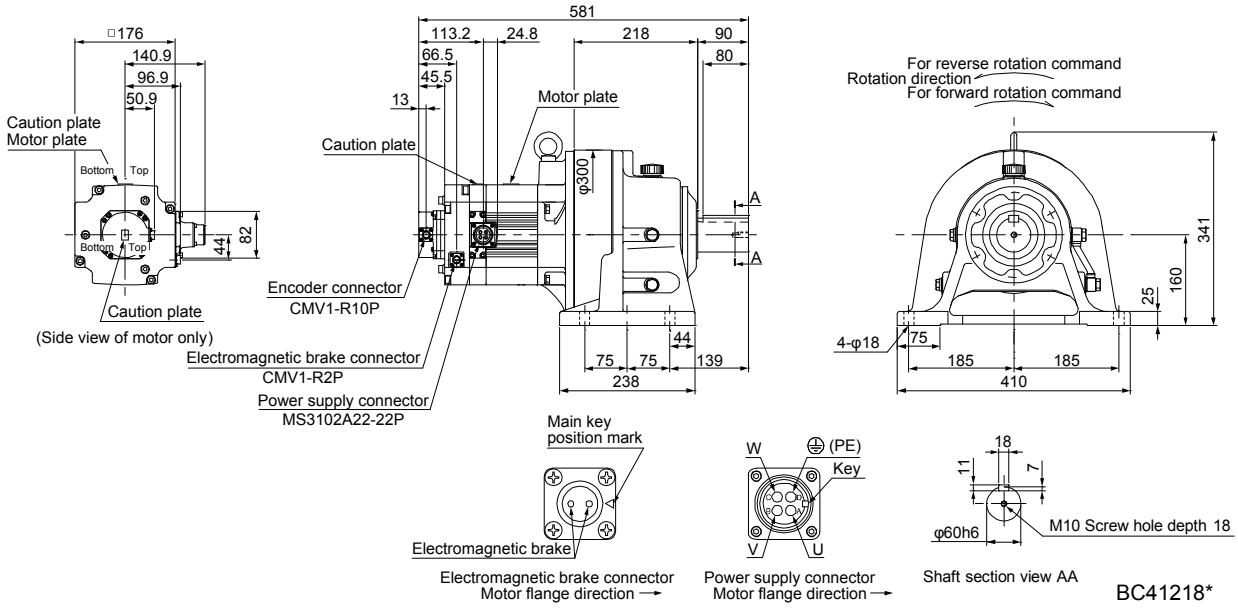

Model	Output [kW]	Reducer model	Reduction ratio	Brake static friction torque [N•m]	Moment of inertia J [× 10^{-4} kg•m^2]	Mass [kg]
HG-SR502BG1H HG-SR5024BG1H	5.0	CHHM-6180	1/29	44	150	184
			1/35		150	
			1/43		149	

[Unit: mm]

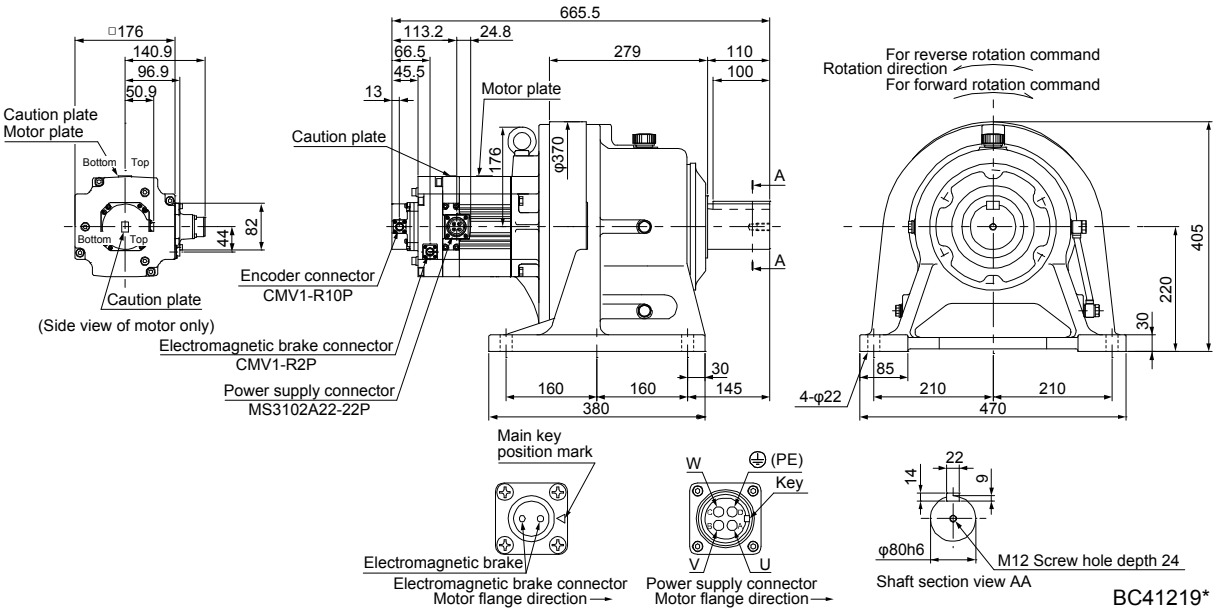

Model	Output [kW]	Reducer model	Reduction ratio	Brake static friction torque [N•m]	Moment of inertia J [× 10^{-4} kg•m^2]	Mass [kg]
HG-SR502BG1H HG-SR5024BG1H	5.0	CHHM-6185	1/59	44	147	184

[Unit: mm]

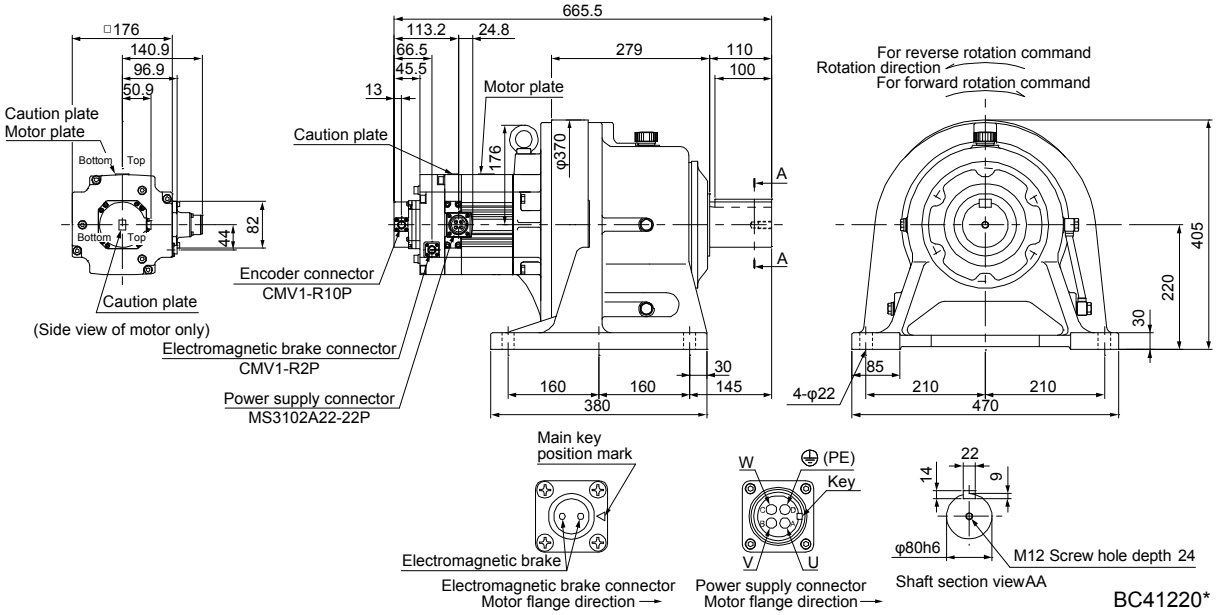

Model	Output [kW]	Reducer model	Reduction ratio	Brake static friction torque [N•m]	Moment of inertia J [× 10^{-4} kg•m^2]	Mass [kg]
HG-SR702BG1H HG-SR7024BG1H	7.0	CHHM-6165	1/6	44	187	114

[Unit: mm]

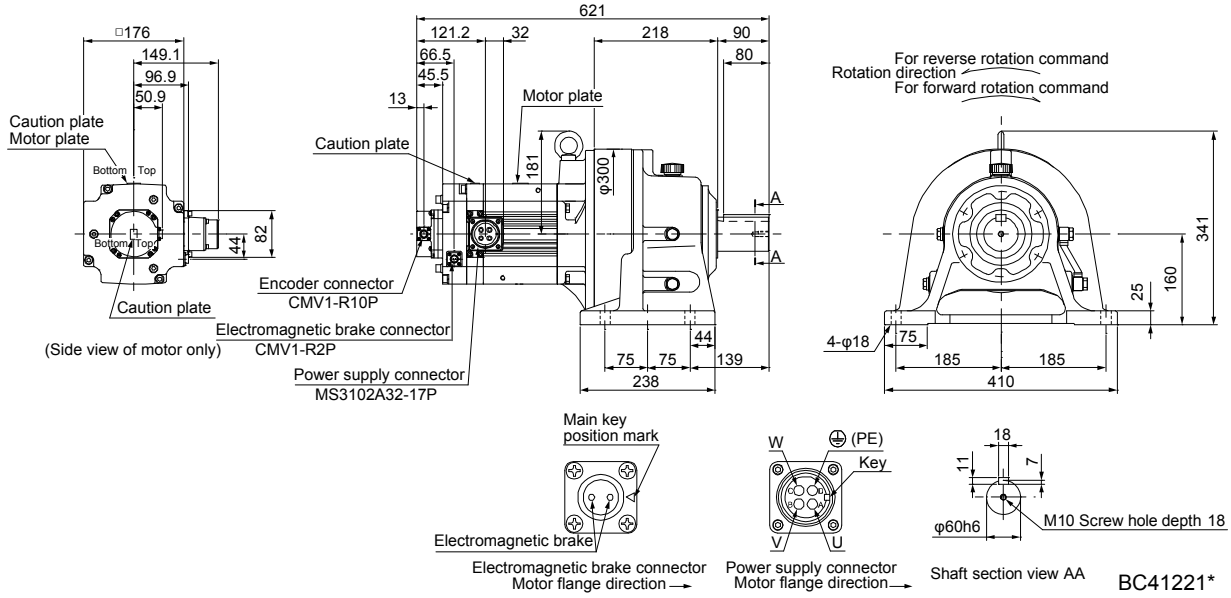

Model	Output [kW]	Reducer model	Reduction ratio	Brake static friction torque [N•m]	Moment of inertia J [× 10^{-4} kg•m^2]	Mass [kg]
HG-SR702BG1H HG-SR7024BG1H	7.0	CHHM-6170	1/11	44	199	154
			1/17		192	

[Unit: mm]

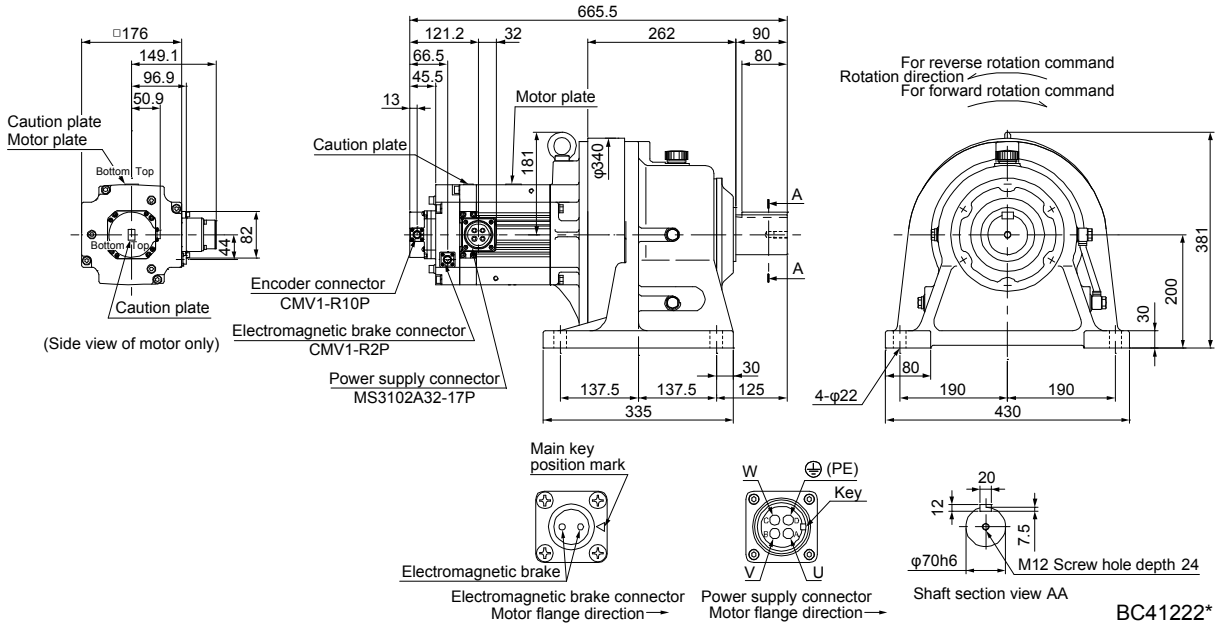

Model	Output [kW]	Reducer model	Reduction ratio	Brake static friction torque [N•m]	Moment of inertia J [× 10^{-4} kg•m^2]	Mass [kg]
HG-SR702BG1H	7.0	CHHM-6180	1/29	44	202	191
HG-SR7024BG1H			1/35		201	

[Unit: mm]

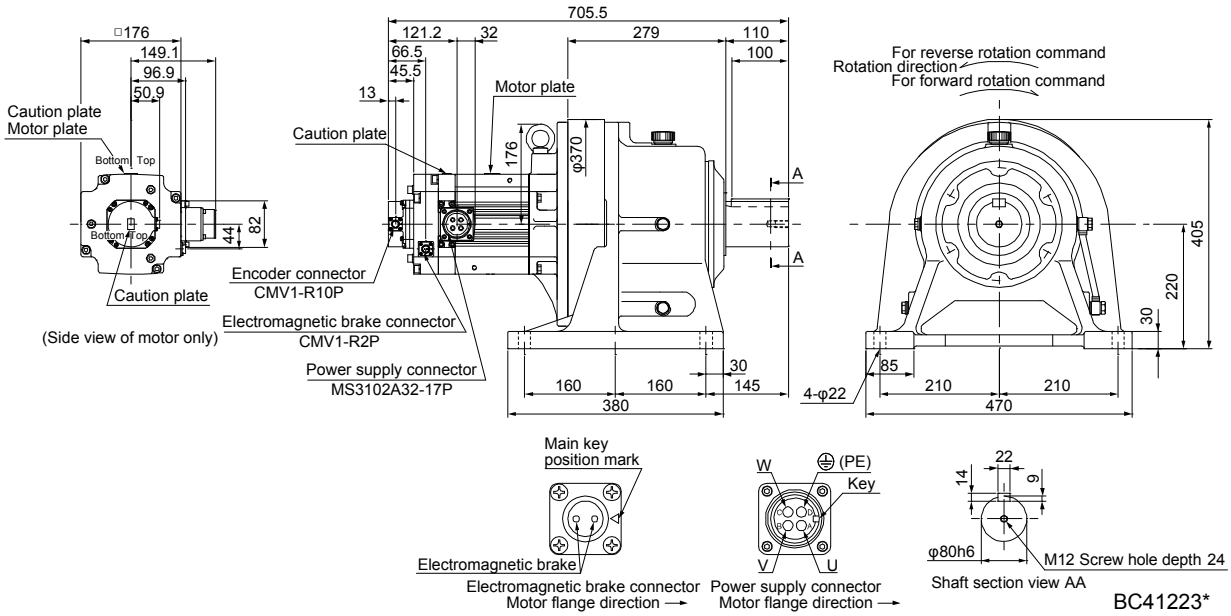

Model	Output [kW]	Reducer model	Reduction ratio	Brake static friction torque [N•m]	Moment of inertia J [× 10^{-4} kg•m^2]	Mass [kg]
HG-SR702BG1H	7.0	CHHM-6195	1/43	44	277	262
HG-SR7024BG1H			1/59		275	

[Unit: mm]

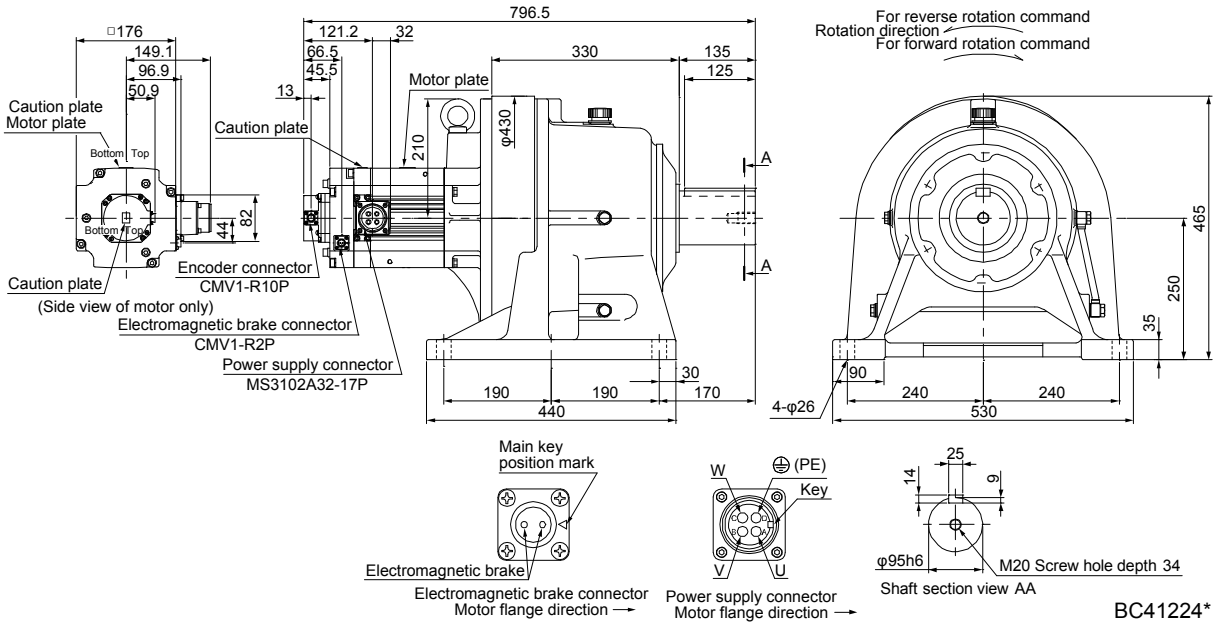

7.7.7 With flange-output type reducer for high precision applications, flange mounting (without an electromagnetic brake)

Model	Output [kW]	Reducer model	Reduction ratio	Moment of inertia J [× 10^{-4} kg•m^2]	Mass [kg]
HG-SR52G5 HG-SR524G5	0.5	HPG-20A-05-F0KSAWS-S	1/5	7.91	7.6
		HPG-20A-11-F0KSAXS-S	1/11	7.82	7.8

[Unit: mm]

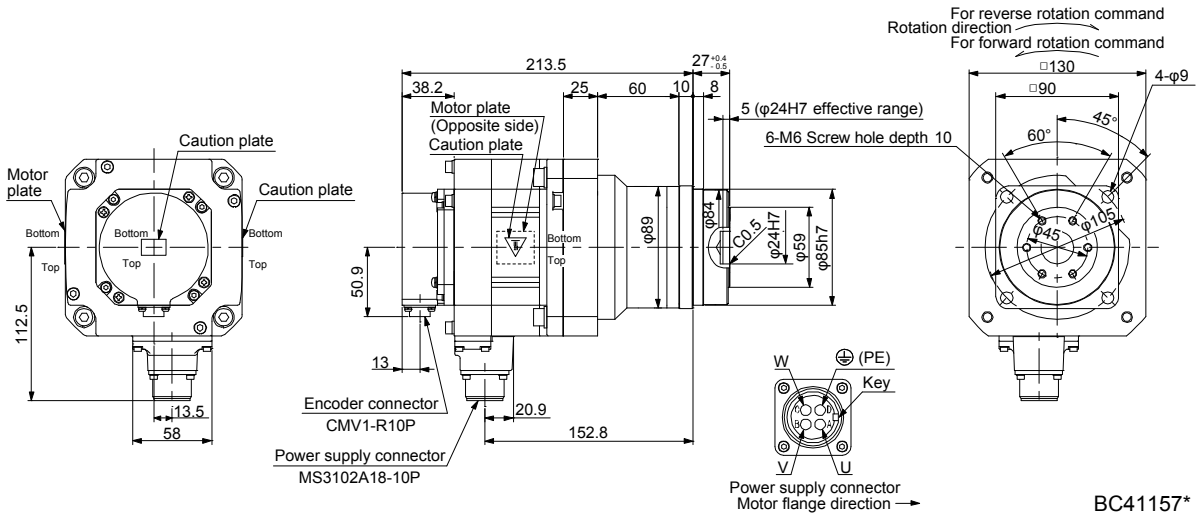

BC41157*

Model	Output [kW]	Reducer model	Reduction ratio	Moment of inertia J [× 10^{-4} kg•m^2]	Mass [kg]
HG-SR52G5 HG-SR524G5	0.5	HPG-32A-21-F0MCSYS-S	1/21	10.2	12
		HPG-32A-33-F0MCSZS-S	1/33	9.96	
		HPG-32A-45-F0MCSZS-S	1/45	9.96	

[Unit: mm]

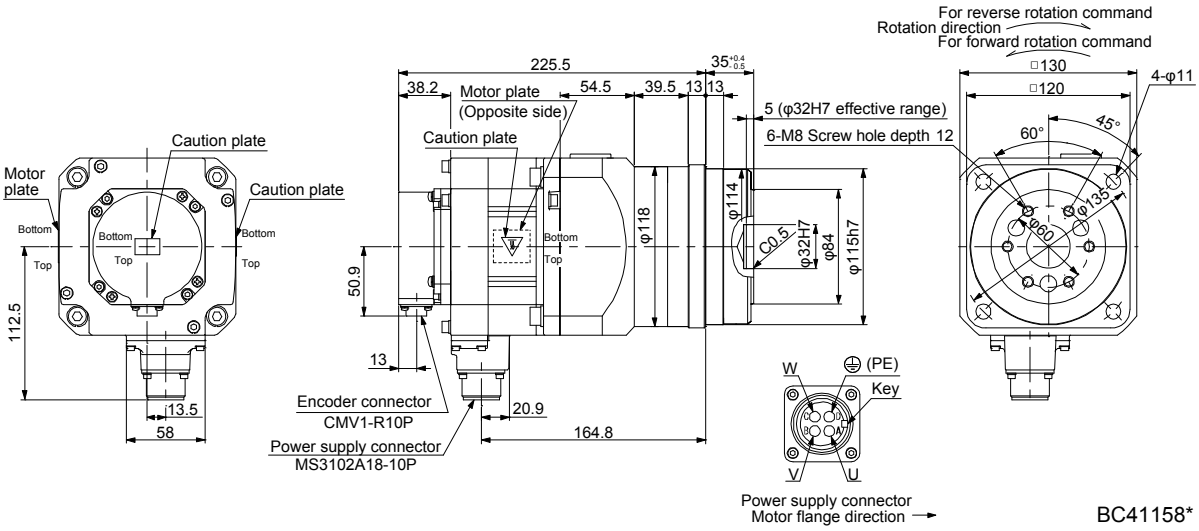

BC41158*

Model	Output [kW]	Reducer model	Reduction ratio	Moment of inertia J [× 10^{-4} kg•m^2]	Mass [kg]
HG-SR102G5 HG-SR1024G5	1.0	HPG-20A-05-F0KSAWS-S	1/5	12.3	9.0

[Unit: mm]

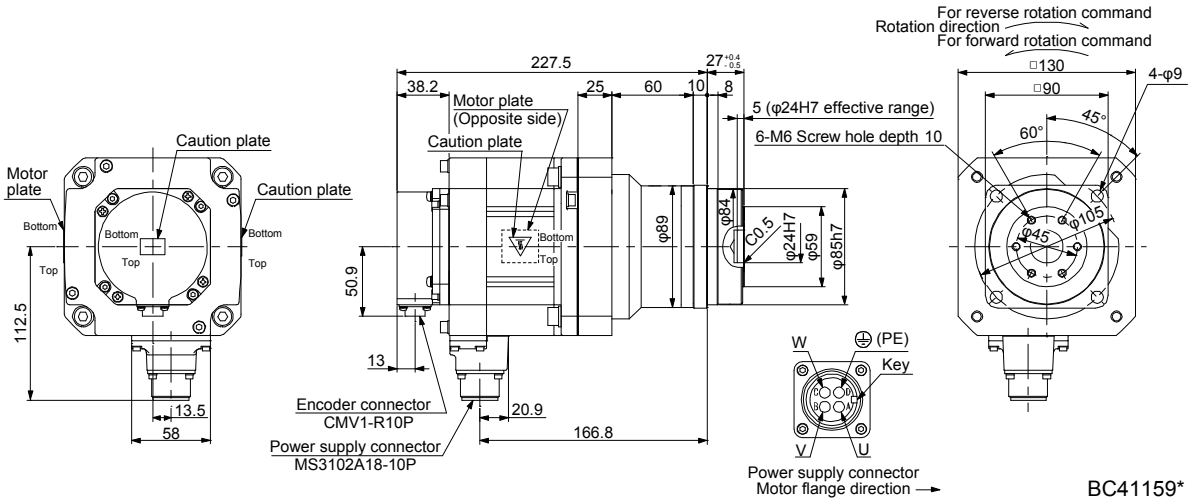

Model	Output [kW]	Reducer model	Reduction ratio	Moment of inertia J [× 10^{-4} kg•m^2]	Mass [kg]
HG-SR102G5 HG-SR1024G5	1.0	HPG-32A-11-F0MCSPS-S	1/11	14.9	13
		HPG-32A-21-F0MCSYS-S	1/21	14.5	

[Unit: mm]

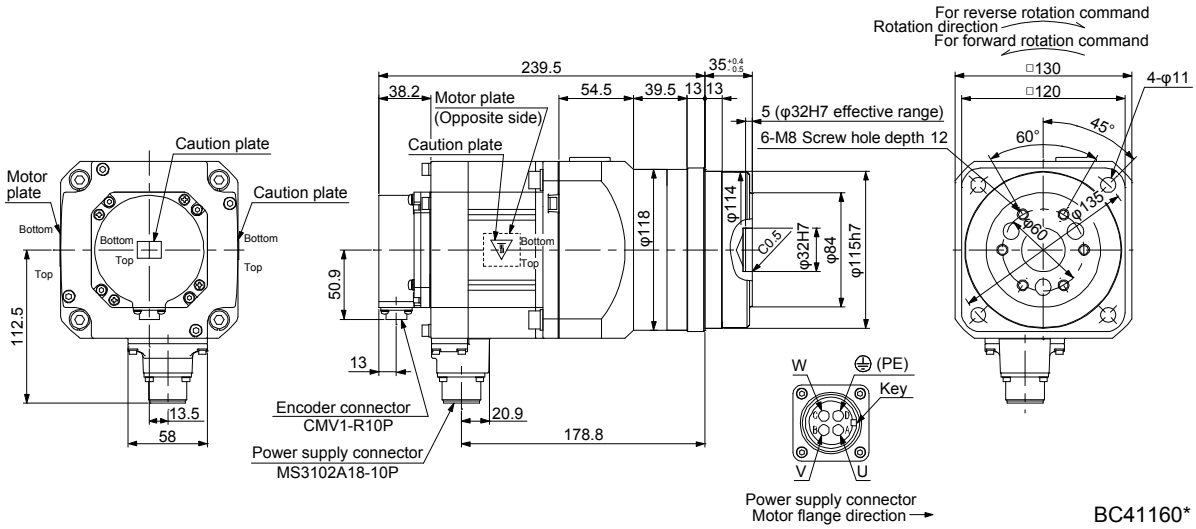

Model	Output [kW]	Reducer model	Reduction ratio	Moment of inertia J [× 10^{-4} kg•m^2]	Mass [kg]
HG-SR102G5	1.0	HPG-50A-33-F0AABC-S	1/33	16.3	23
HG-SR1024G5		HPG-50A-45-F0AABC-S	1/45	16.2	

[Unit: mm]

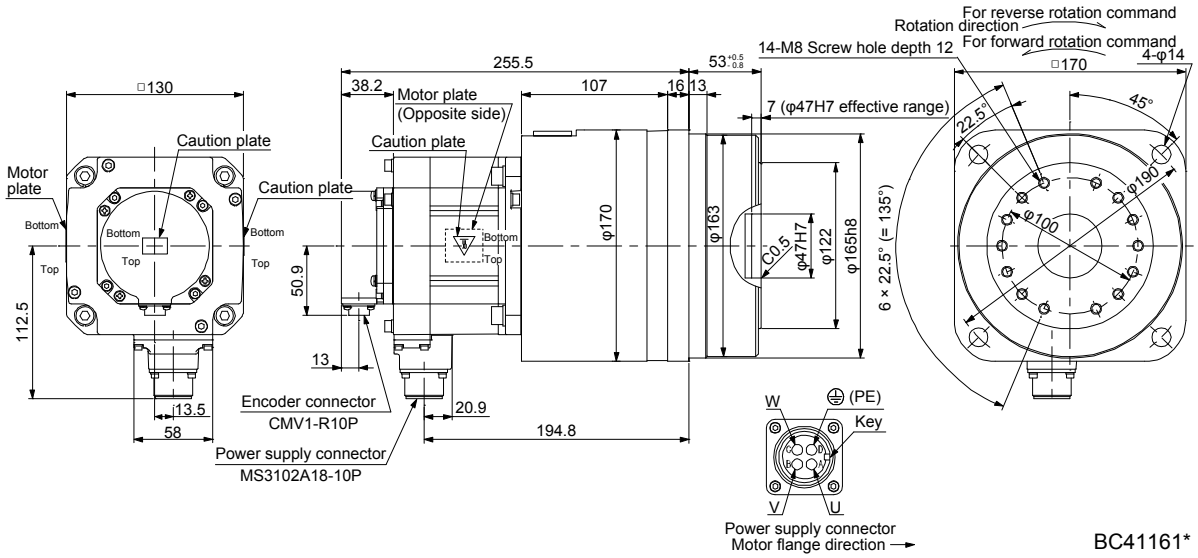

BC41161*

Model	Output [kW]	Reducer model	Reduction ratio	Moment of inertia J [× 10^{-4} kg•m^2]	Mass [kg]
HG-SR152G5 HG-SR1524G5	1.5	HPG-20A-05-F0KSAWS-S	1/5	16.7	11

[Unit: mm]

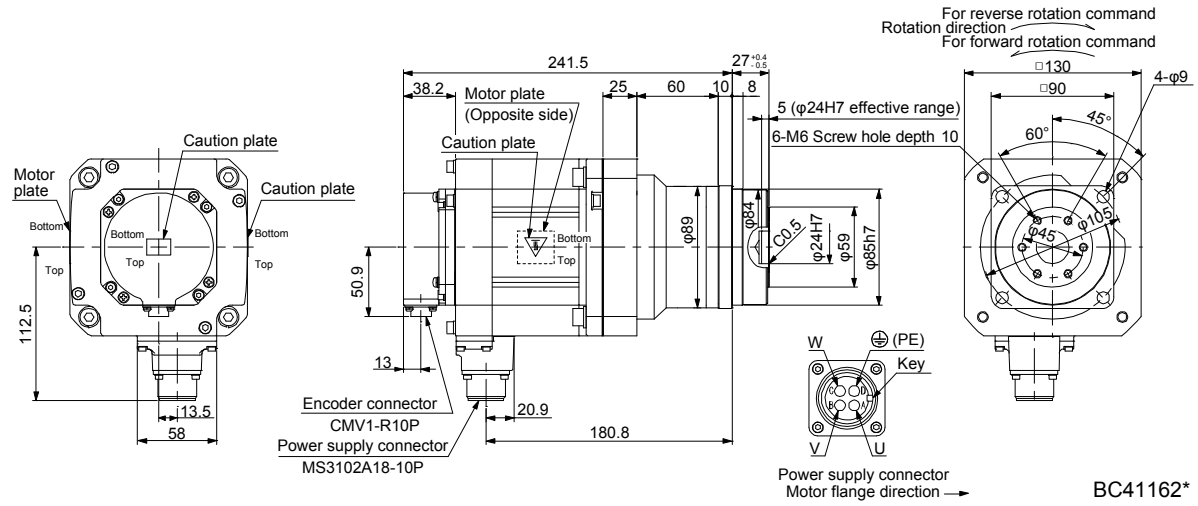

BC41162*

Model	Output [kW]	Reducer model	Reduction ratio	Moment of inertia J [× 10^{-4} kg•m^2]	Mass [kg]
HG-SR152G5 HG-SR1524G5	1.5	HPG-32A-11-F0MCSPS-S	1/11	19.3	14

[Unit: mm]

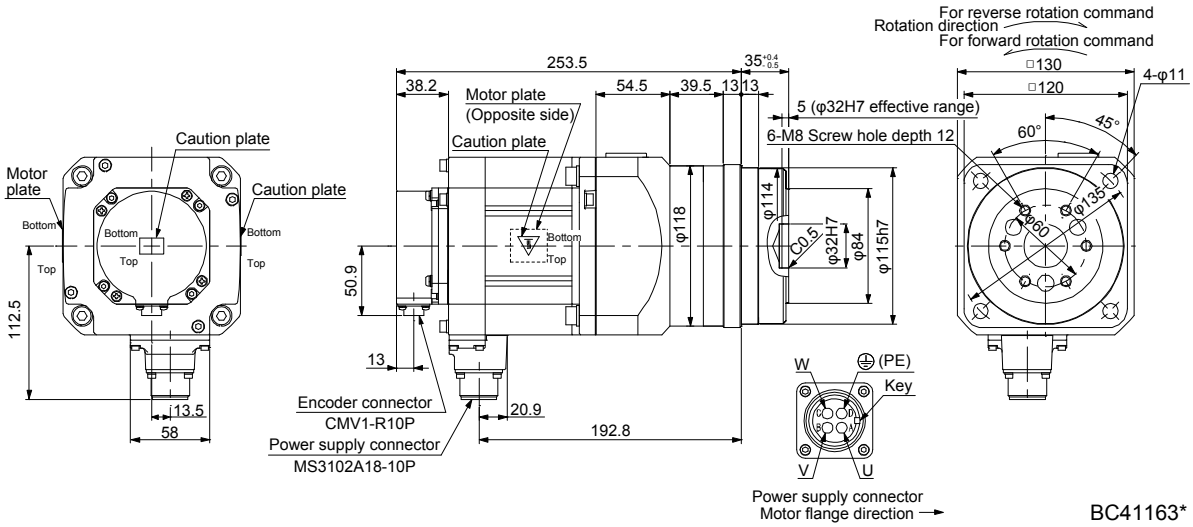

BC41163*

Model	Output [kW]	Reducer model	Reduction ratio	Moment of inertia J [× 10^{-4} kg•m^2]	Mass [kg]
HG-SR152G5 HG-SR1524G5	1.5	HPG-50A-21-F0AABC-S	1/21	21.7	24
		HPG-50A-33-F0AABC-S	1/33	20.7	
		HPG-50A-45-F0AABC-S	1/45	20.6	

[Unit: mm]

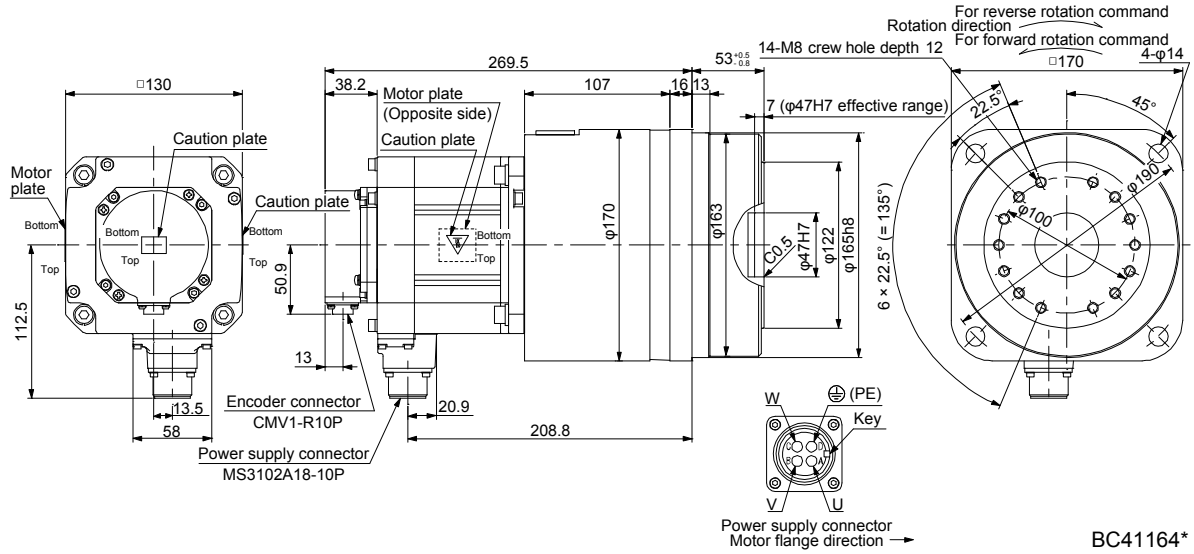

BC41164*

Model	Output [kW]	Reducer model	Reduction ratio	Moment of inertia J [× 10^{-4} kg•m^2]	Mass [kg]
HG-SR202G5 HG-SR2024G5	2.0	HPG-32A-05-F0PBZI-S	1/5	51.4	19
		HPG-32A-11-F0PBZJ-S	1/11	51.2	

[Unit: mm]

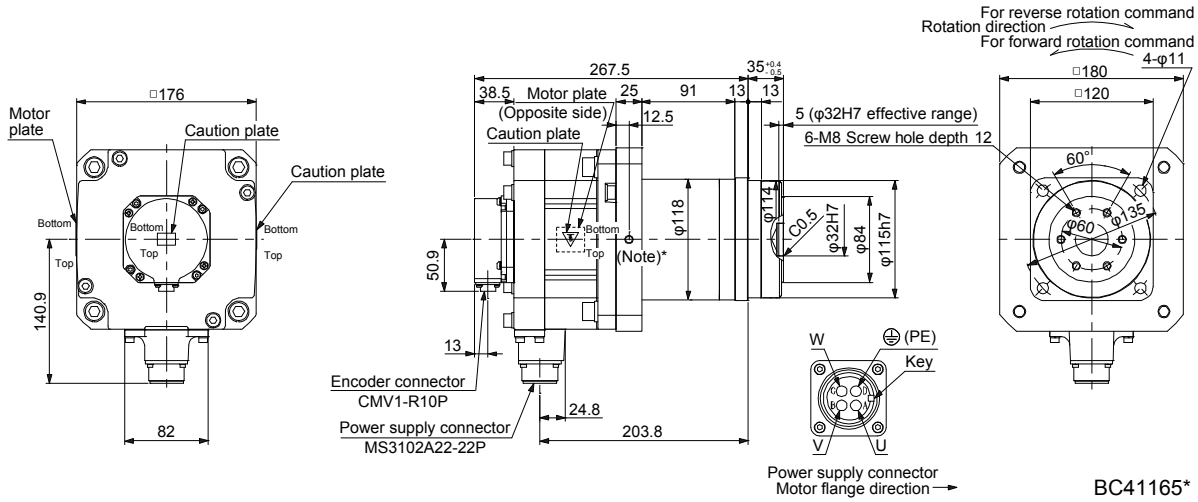

BC41165*

Note. * is a screw hole for eyebolt (M8).

Model	Output [kW]	Reducer model	Reduction ratio	Moment of inertia J [× 10^{-4} kg•m^2]	Mass [kg]
HG-SR202G5 HG-SR2024G5	2.0	HPG-50A-21-F0BBDF-S	1/21	53.2	29
		HPG-50A-33-F0BBDF-S	1/33	52.2	
		HPG-50A-45-F0BBDF-S	1/45	52.2	

[Unit: mm]

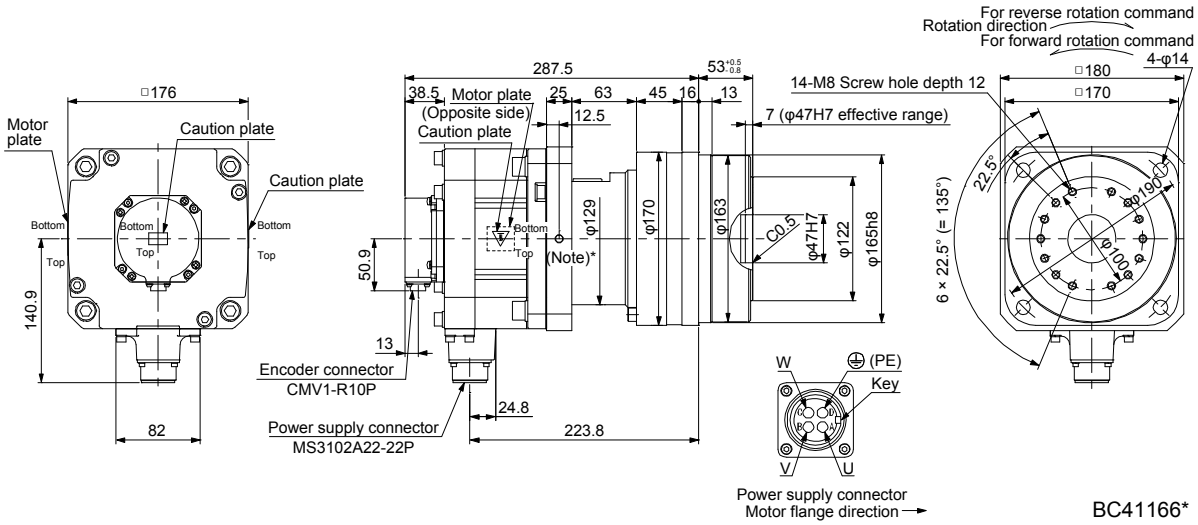

BC41166*

Note. * is a screw hole for eyebolt (M8).

Model	Output [kW]	Reducer model	Reduction ratio	Moment of inertia J [× 10^{-4} kg•m^2]	Mass [kg]
HG-SR352G5 HG-SR3524G5	3.5	HPG-32A-05-F0PBZI-S	1/5	83.2	24

[Unit: mm]

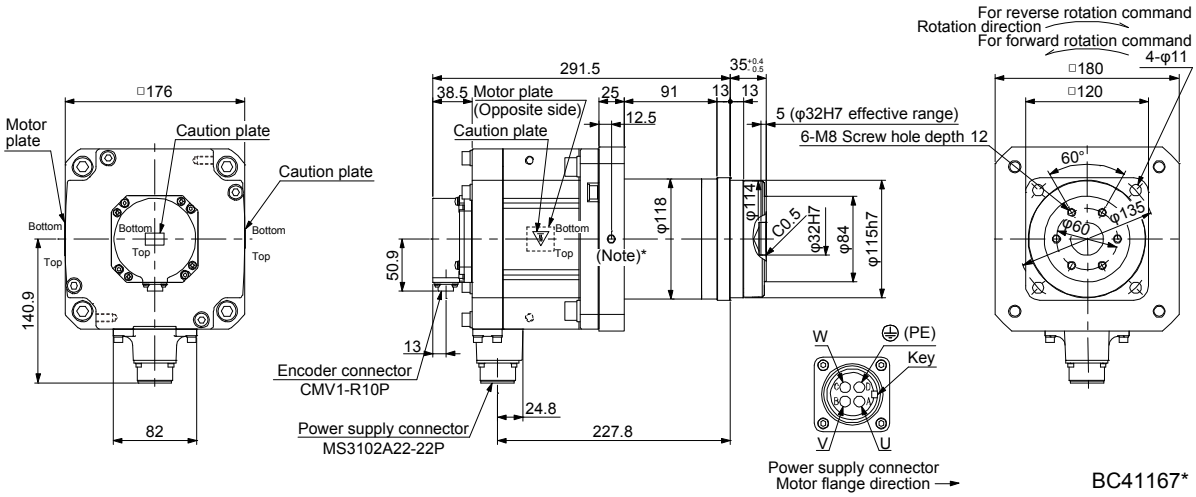

Note. * is a screw hole for eyebolt (M8).

Model	Output [kW]	Reducer model	Reduction ratio	Moment of inertia J [× 10^{-4} kg•m^2]	Mass [kg]
HG-SR352G5 HG-SR3524G5	3.5	HPG-50A-11-F0BBDF-S	1/11	86.7	34
		HPG-50A-21-F0BBDF-S	1/21	85.0	

[Unit: mm]

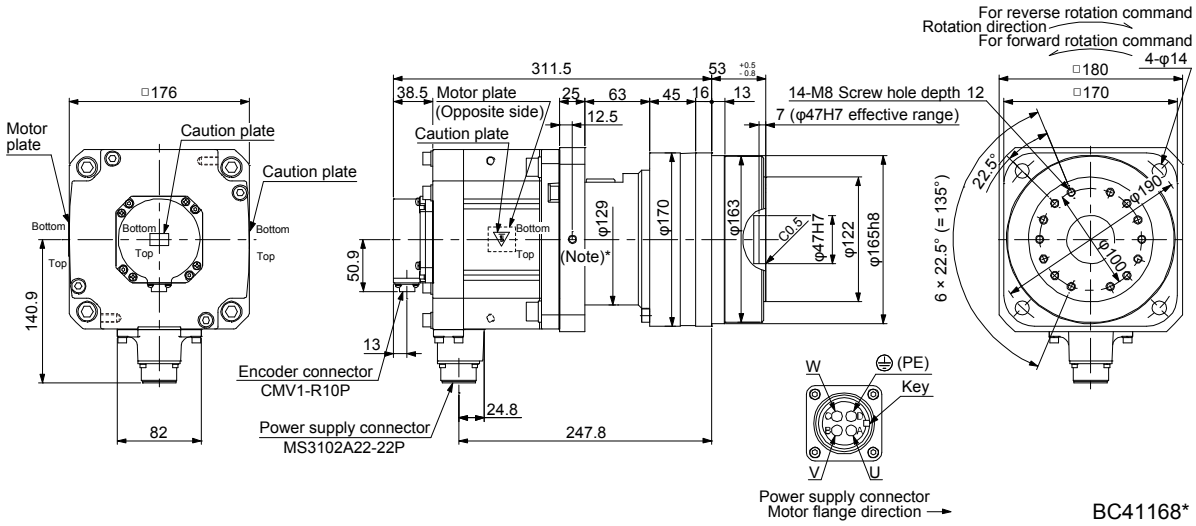

Note. * is a screw hole for eyebolt (M8).

Model	Output [kW]	Reducer model	Reduction ratio	Moment of inertia J [× 10^{-4} kg•m^2]	Mass [kg]
HG-SR502G5	5.0	HPG-50A-05-F0BBCF-S	1/5	110	36
HG-SR5024G5		HPG-50A-11-F0BBDF-S	1/11	108	38

[Unit: mm]

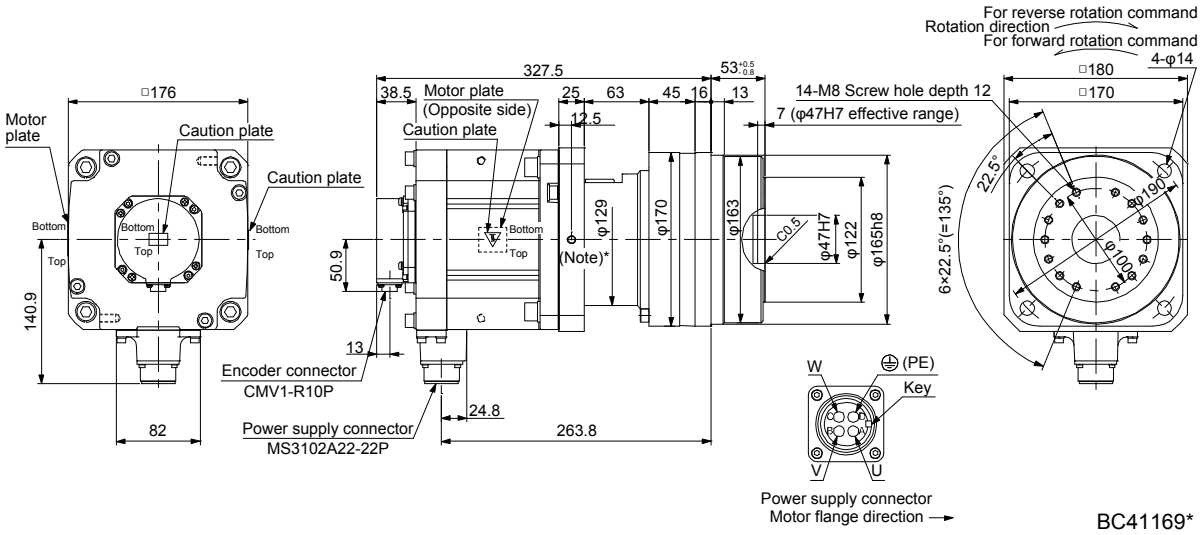

Note. * is a screw hole for eyebolt (M8).

Model	Output [kW]	Reducer model	Reduction ratio	Moment of inertia J [× 10^{-4} kg•m^2]	Mass [kg]
HG-SR702G5 HG-SR7024G5	7.0	HPG-50A-05-F0BBCF-S	1/5	161	43

[Unit: mm]

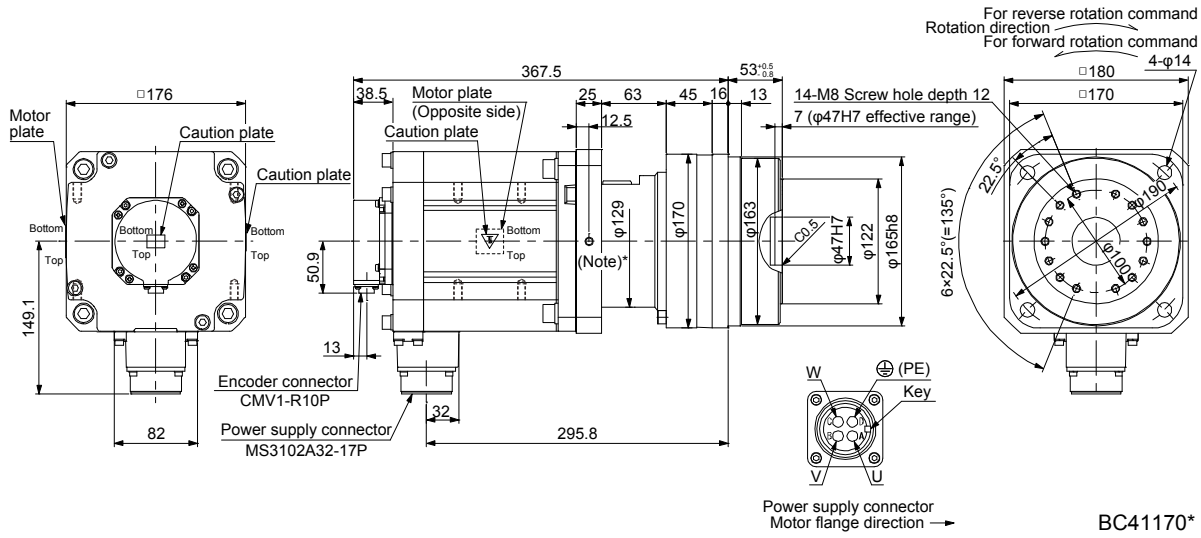

Note. * is a screw hole for eyebolt (M8).

7.7.8 With flange-output type reducer for high precision applications, flange mounting (with an electromagnetic brake)

Model	Output [kW]	Reducer model	Reduction ratio	Brake static friction torque [N•m]	Moment of inertia J [× 10^{-4} kg•m^2]	Mass [kg]
HG-SR52BG5 HG-SR524BG5	0.5	HPG-20A-05-F0KSAWS-S	1/5	8.5	10.1	9.5
		HPG-20A-11-F0KSAXS-S	1/11		10.0	9.7

[Unit: mm]

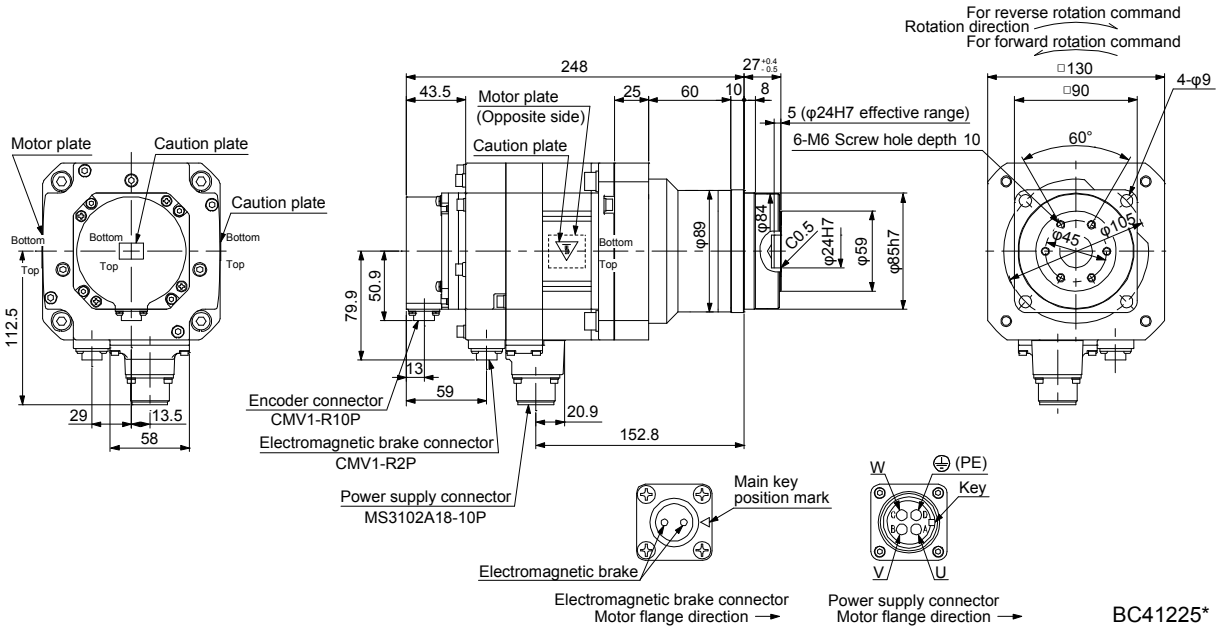

Model	Output [kW]	Reducer model	Reduction ratio	Brake static friction torque [N•m]	Moment of inertia J [× 10^{-4} kg•m^2]	Mass [kg]
HG-SR52BG5 HG-SR524BG5	0.5	HPG-32A-21-F0MCSYS-S	1/21	8.5	12.4	14
		HPG-32A-33-F0MCSZS-S	1/33		12.2	
		HPG-32A-45-F0MCSZS-S	1/45		12.2	

[Unit: mm]

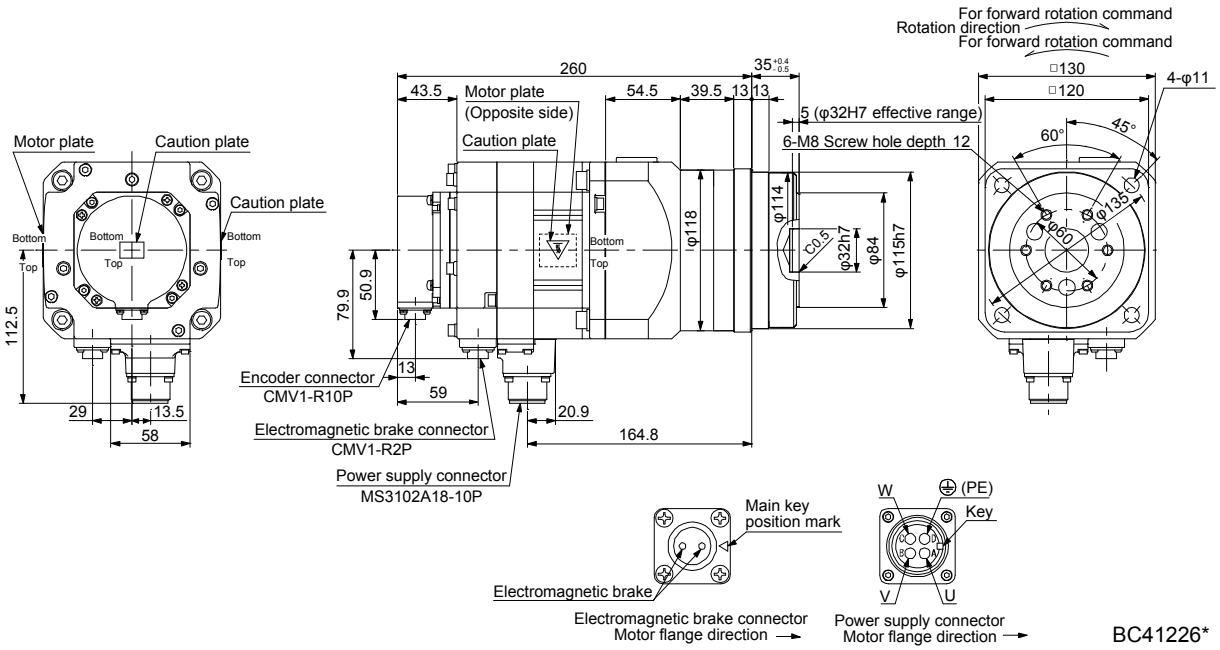

Model	Output [kW]	Reducer model	Reduction ratio	Brake static friction torque [N•m]	Moment of inertia J [× 10^{-4} kg•m^2]	Mass [kg]
HG-SR102BG5 HG-SR1024BG5	1.0	HPG-20A-05-F0KSAWS-S	1/5	8.5	14.5	11

[Unit: mm]

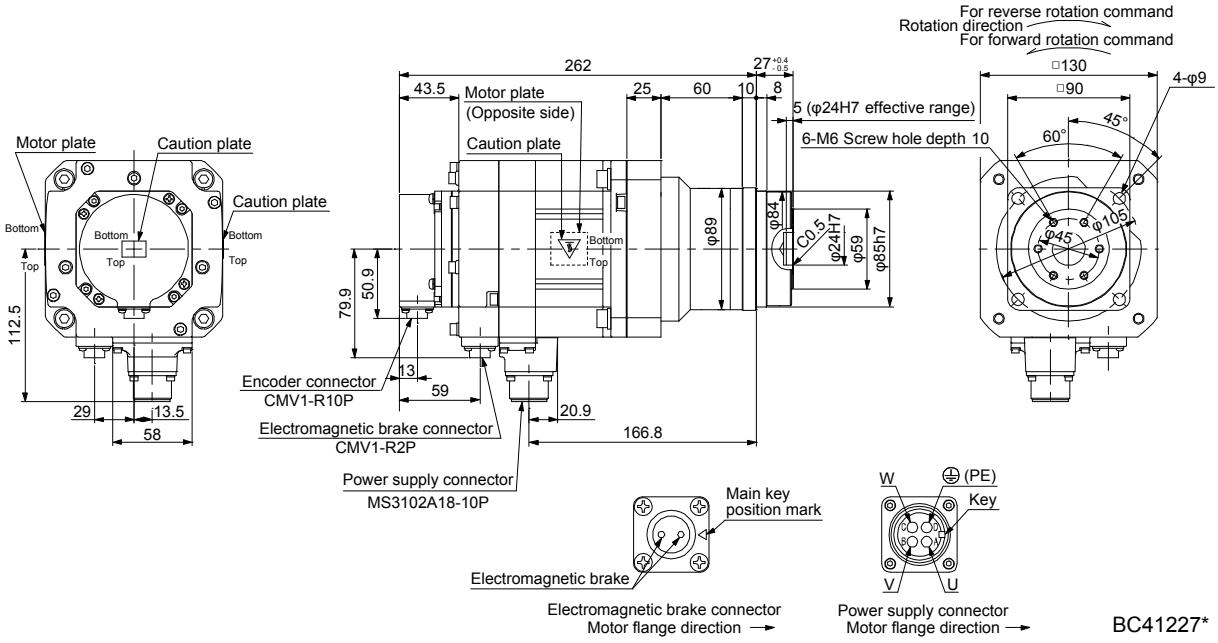

Model	Output [kW]	Reducer model	Reduction ratio	Brake static friction torque [N•m]	Moment of inertia J [× 10^{-4} kg•m^2]	Mass [kg]
HG-SR102BG5 HG-SR1024BG5	1.0	HPG-32A-11-F0MCSPS-S	1/11	8.5	17.1	15
		HPG-32A-21-F0MCSYS-S	1/21		16.7	

[Unit: mm]

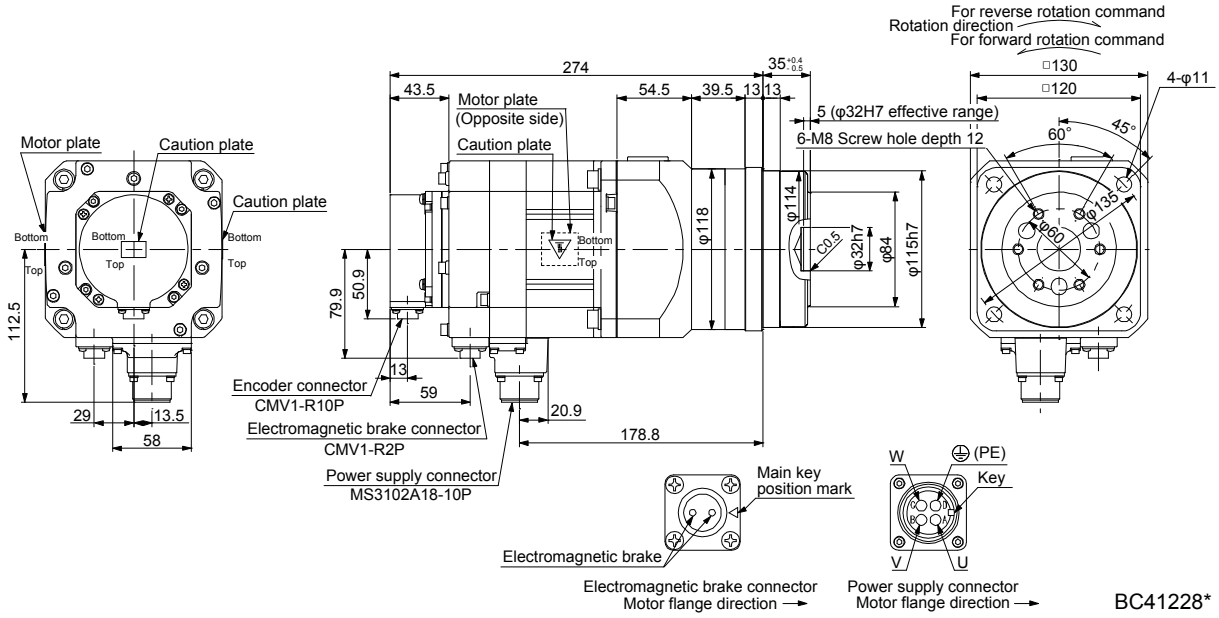

Model	Output [kW]	Reducer model	Reduction ratio	Brake static friction torque [N•m]	Moment of inertia J [× 10^{-4} kg•m^2]	Mass [kg]
HG-SR102BG5 HG-SR1024BG5	1.5	HPG-50A-33-F0AABC-S	1/33	8.5	18.5	25
		HPG-50A-45-F0AABC-S	1/45		18.4	

[Unit: mm]

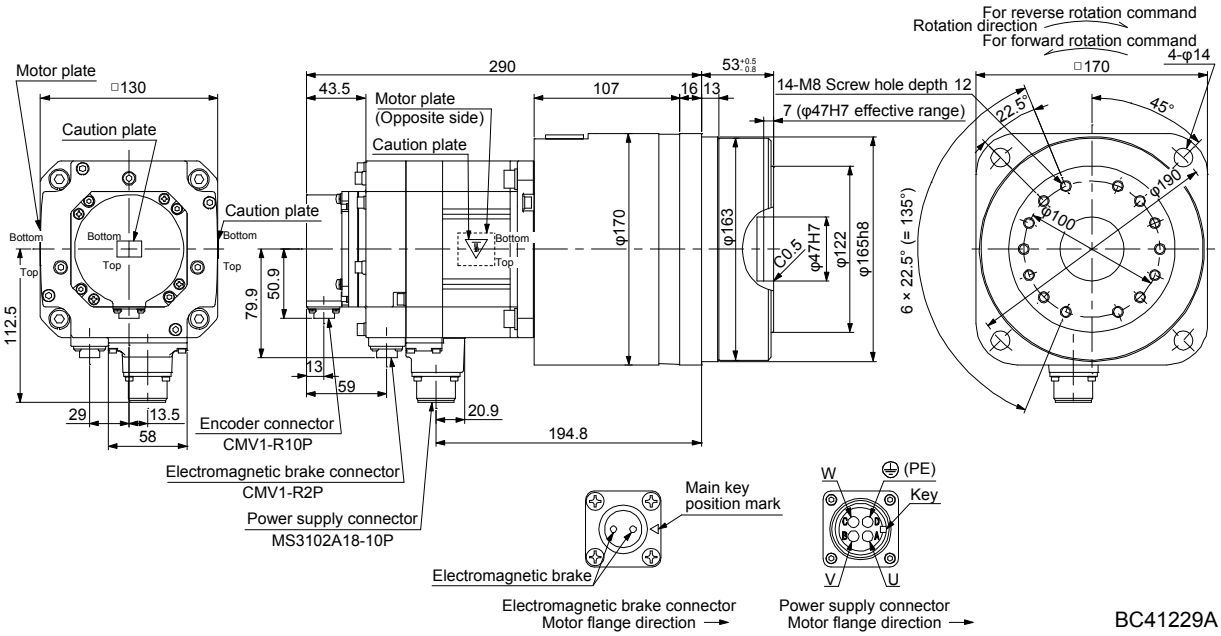

Model	Output [kW]	Reducer model	Reduction ratio	Brake static friction torque [N•m]	Moment of inertia J [× 10^{-4} kg•m^2]	Mass [kg]
HG-SR152BG5 HG-SR1524BG5	1.5	HPG-20A-05-F0KSAWS-S	1/5	8.5	18.9	13

[Unit: mm]

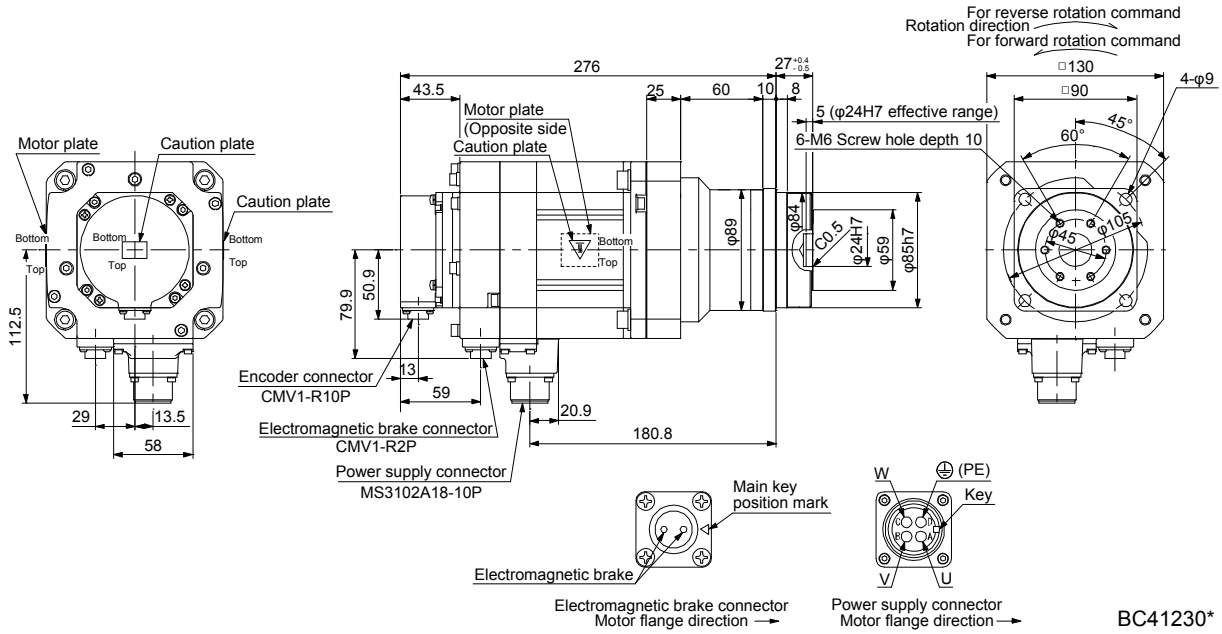

Model	Output [kW]	Reducer model	Reduction ratio	Brake static friction torque [N•m]	Moment of inertia J [× 10^{-4} kg•m^2]	Mass [kg]
HG-SR152BG5 HG-SR1524BG5	1.5	HPG-32A-11-F0MCSPS-S	1/11	8.5	21.5	16

[Unit: mm]

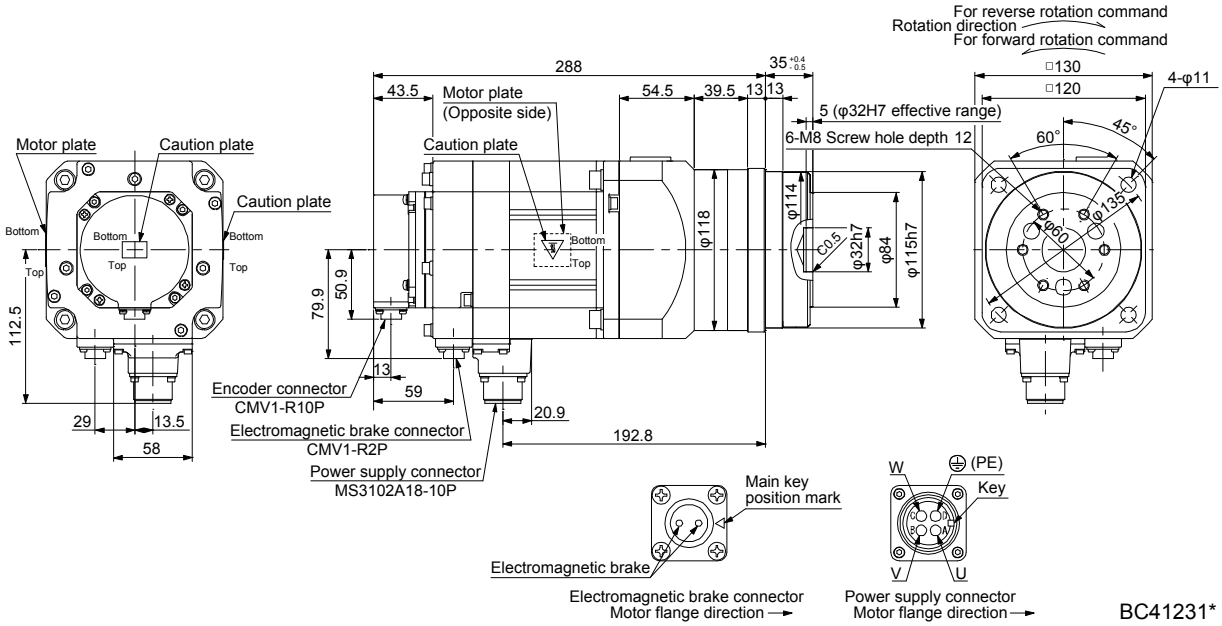

Model	Output [kW]	Reducer model	Reduction ratio	Brake static friction torque [N•m]	Moment of inertia J [× 10^{-4} kg•m^2]	Mass [kg]
HG-SR152BG5 HG-SR1524BG5	1.5	HPG-50A-21-F0AABC-S	1/21	8.5	23.9	26
		HPG-50A-33-F0AABC-S	1/33		22.9	
		HPG-50A-45-F0AABC-S	1/45		22.8	

[Unit: mm]

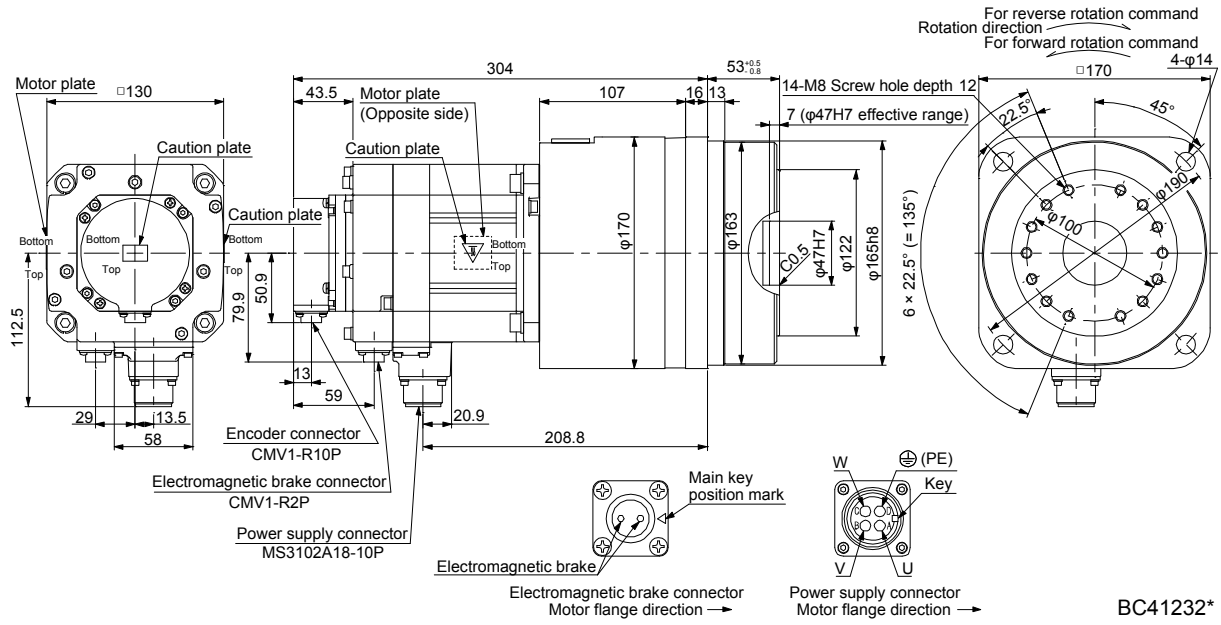

Model	Output [kW]	Reducer model	Reduction ratio	Brake static friction torque [N•m]	Moment of inertia J [× 10^{-4} kg•m^2]	Mass [kg]
HG-SR202BG5 HG-SR2024BG5	2.0	HGP-32A-05-F0PBZI-S	1/5	44	61.1	25
		HGP-32A-11-F0PBZJ-S	1/11		60.9	

[Unit: mm]

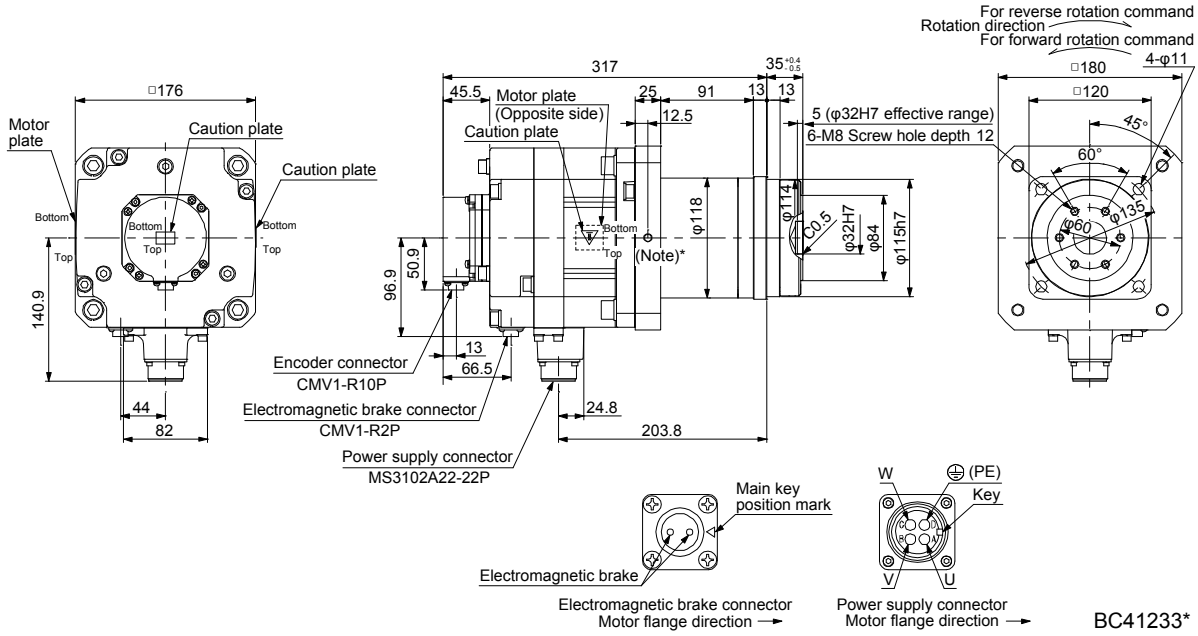

Note. * is a screw hole for eyebolt (M8).

Model	Output [kW]	Reducer model	Reduction ratio	Brake static friction torque [N•m]	Moment of inertia J [× 10^{-4} kg•m^2]	Mass [kg]
HG-SR202BG5 HG-SR2024BG5	2.0	HPG-50A-21-F0BBDF-S	1/21	44	62.9	35
		HPG-50A-33-F0BBDF-S	1/33		61.9	
		HPG-50A-45-F0BBDF-S	1/45		61.9	

[Unit: mm]

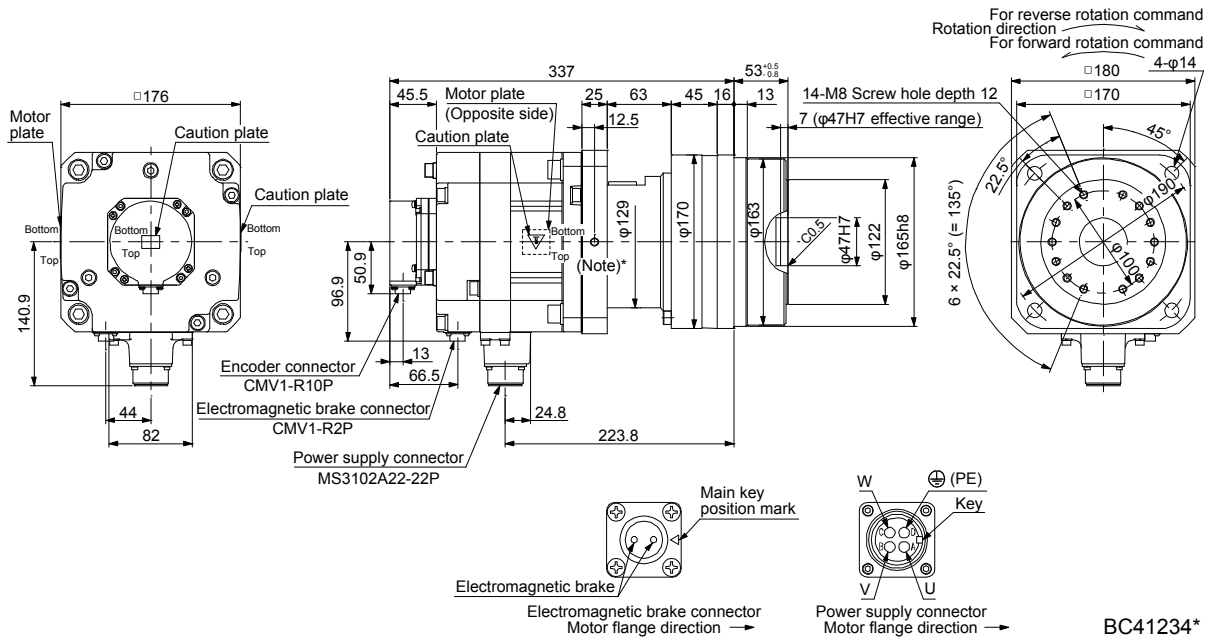

Note. * is a screw hole for eyebolt (M8).

Model	Output [kW]	Reducer model	Reduction ratio	Brake static friction torque [N•m]	Moment of inertia J [× 10^{-4} kg•m^2]	Mass [kg]
HG-SR352BG5 HG-SR3524BG5	3.5	HPG-32A-05-F0PBZI-S	1/5	44	92.8	30

[Unit: mm]

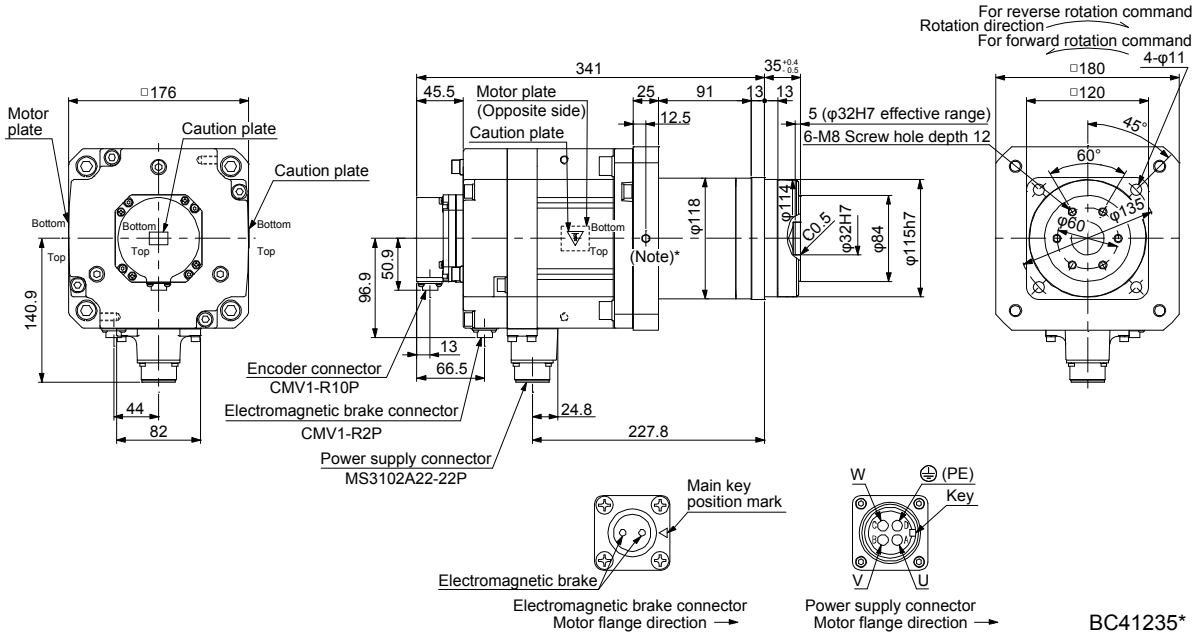

Note. * is a screw hole for eyebolt (M8).

Model	Output [kW]	Reducer model	Reduction ratio	Brake static friction torque [N•m]	Moment of inertia J [× 10^{-4} kg•m^2]	Mass [kg]
HG-SR352BG5 HG-SR3524BG5	3.5	HPG-50A-11-F0BBDF-S	1/11	44	96.3	40
		HPG-50A-21-F0BBDF-S	1/21		94.6	

[Unit: mm]

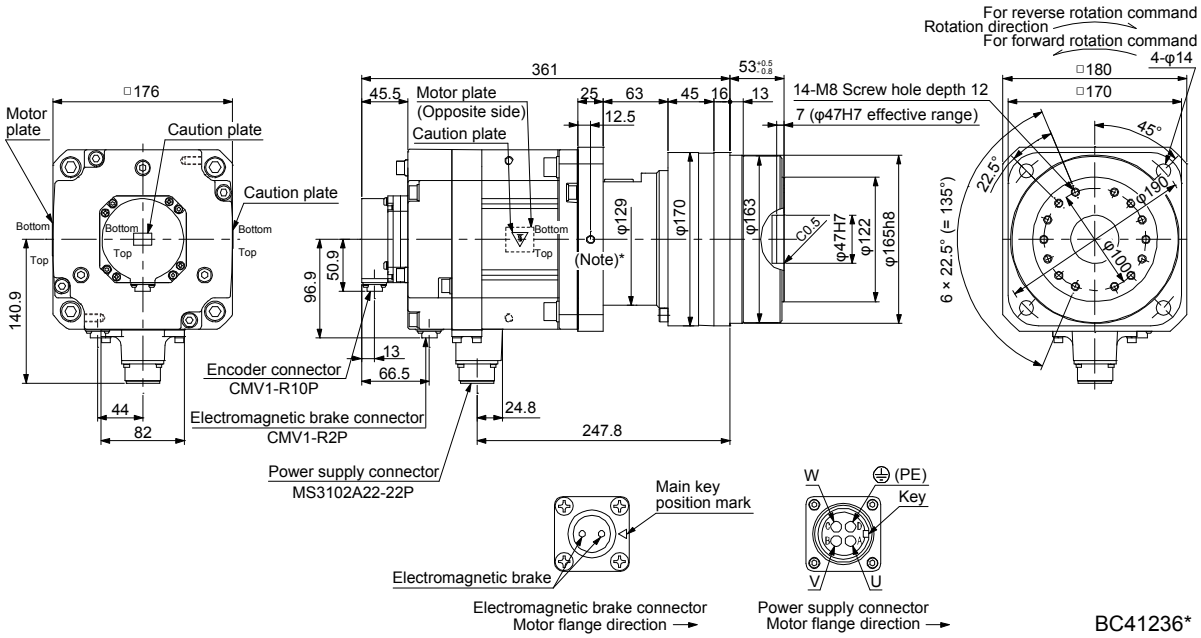

Note. * is a screw hole for eyebolt (M8).

Model	Output [kW]	Reducer model	Reduction ratio	Brake static friction torque [N•m]	Moment of inertia J [× 10^{-4} kg•m^2]	Mass [kg]
HG-SR502BG5 HG-SR5024BG5	5.0	HPG-50A-05-F0BBCF-S	1/5	44	119	42
		HPG-50A-11-F0BBDF-S	1/11		117	44

[Unit: mm]

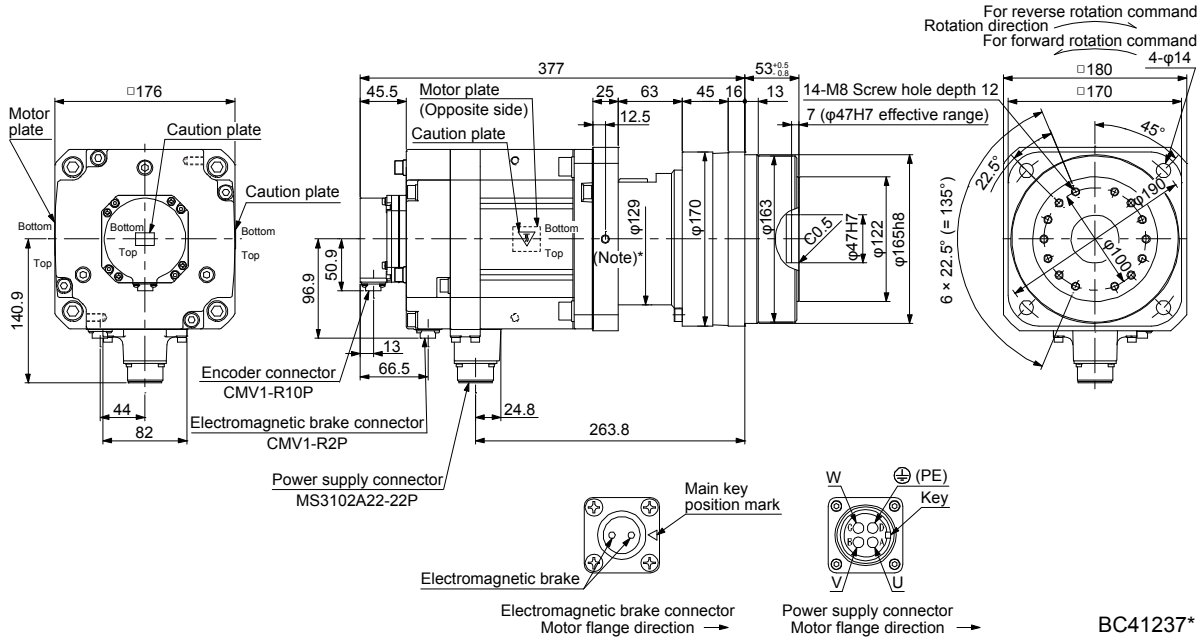

Note. * is a screw hole for eyebolt (M8).

Model	Output [kW]	Reducer model	Reduction ratio	Brake static friction torque [N•m]	Moment of inertia J [× 10^{-4} kg•m^2]	Mass [kg]
HG-SR702BG5 HG-SR7024BG5	7.0	HPG-50A-05-F0BBCF-S	1/5	44	171	49

[Unit: mm]

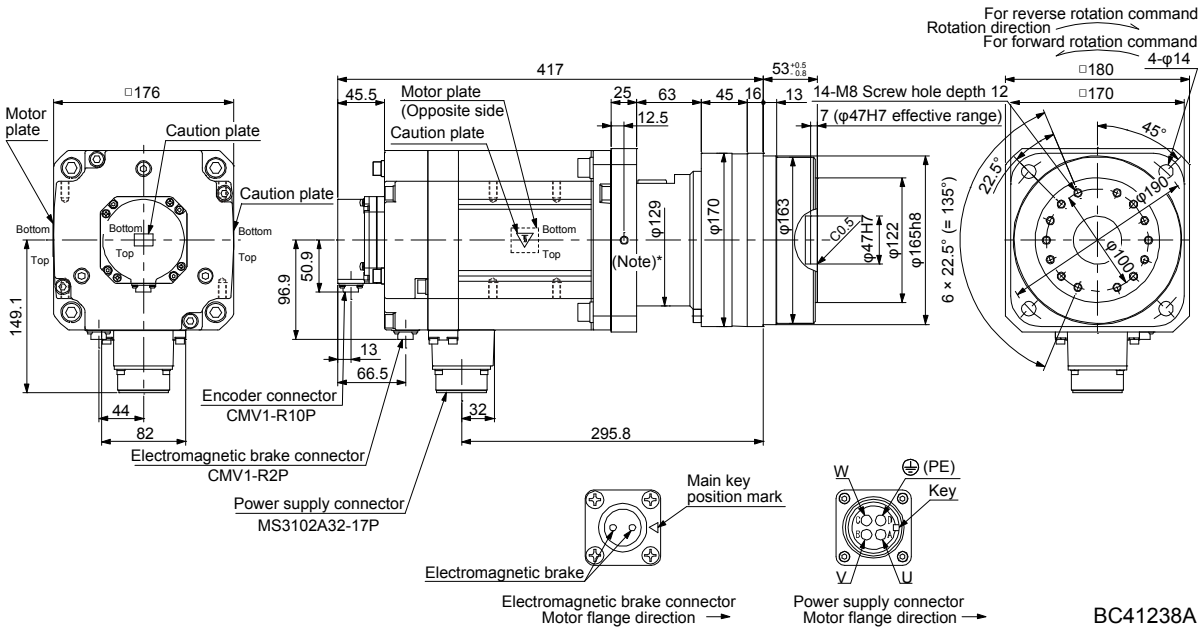

Note. * is a screw hole for eyebolt (M8).

7.7.9 With shaft-output type reducer for high precision applications, flange mounting (without an electromagnetic brake)

Model	Output [kW]	Reducer model	Reduction ratio	Moment of inertia J [× 10^{-4} kg•m^2]	Mass [kg]
HG-SR52G7 HG-SR524G7	0.5	HPG-20A-05-J2KSAWS-S	1/5	7.95	8.0
		HPG-20A-11-J2KSAXS-S	1/11	7.82	8.2

[Unit: mm]

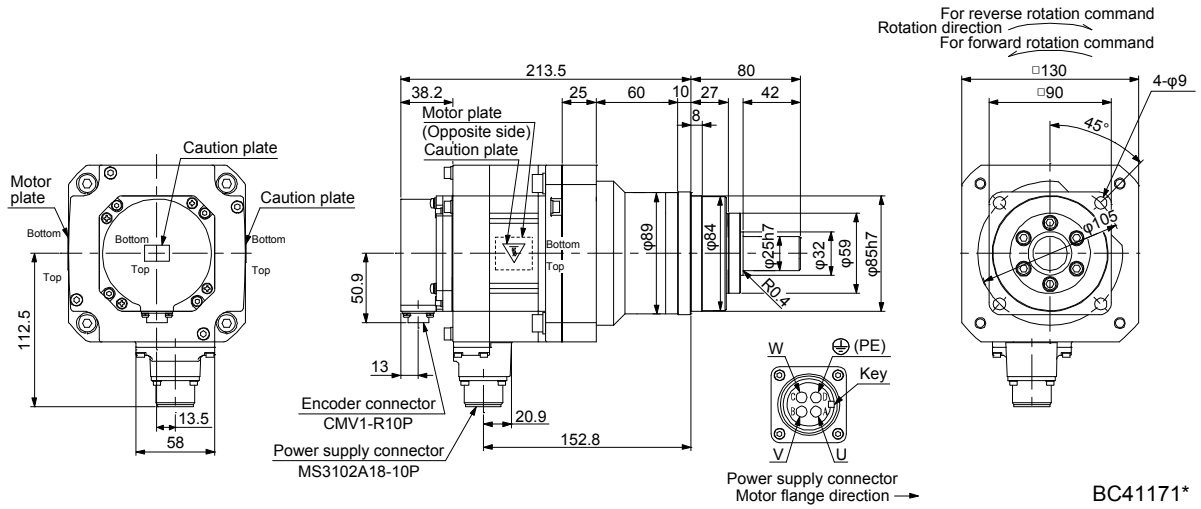

BC41171*

Model	Output [kW]	Reducer model	Reduction ratio	Moment of inertia J [× 10^{-4} kg•m^2]	Mass [kg]
HG-SR52G7 HG-SR524G7	0.5	HPG-32A-21-J2MCSYS-S	1/21	10.2	13
		HPG-32A-33-J2MCSZS-S	1/33	9.96	
		HPG-32A-45-J2MCSZS-S	1/45	9.96	

[Unit: mm]

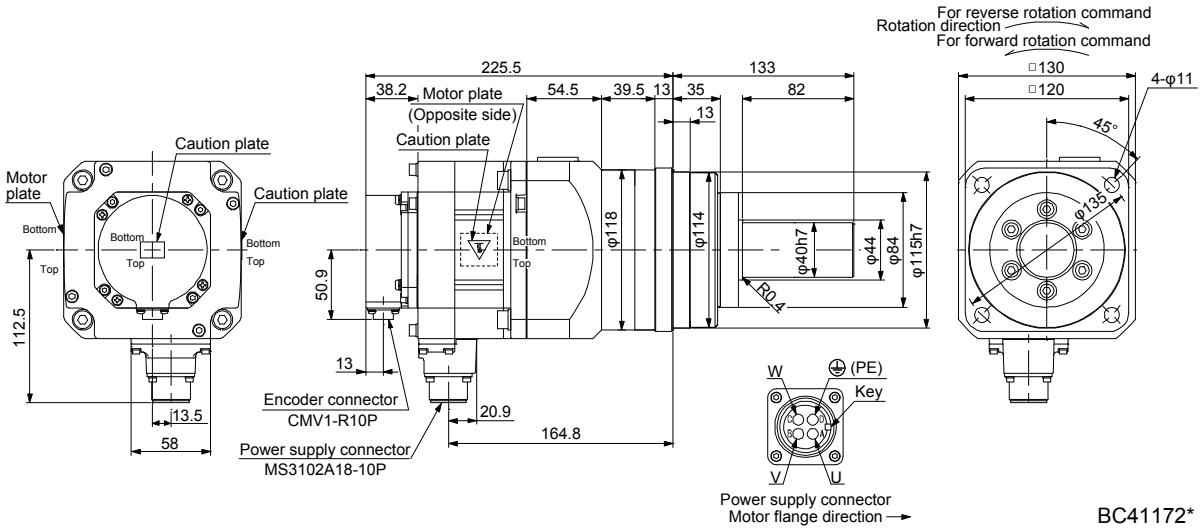

BC41172*

Model	Output [kW]	Reducer model	Reduction ratio	Moment of inertia J [× 10^{-4} kg•m^2]	Mass [kg]
HG-SR102G7 HG-SR1024G7	1.0	HPG-20A-05-J2KSAWS-S	1/5	12.3	9.4

[Unit: mm]

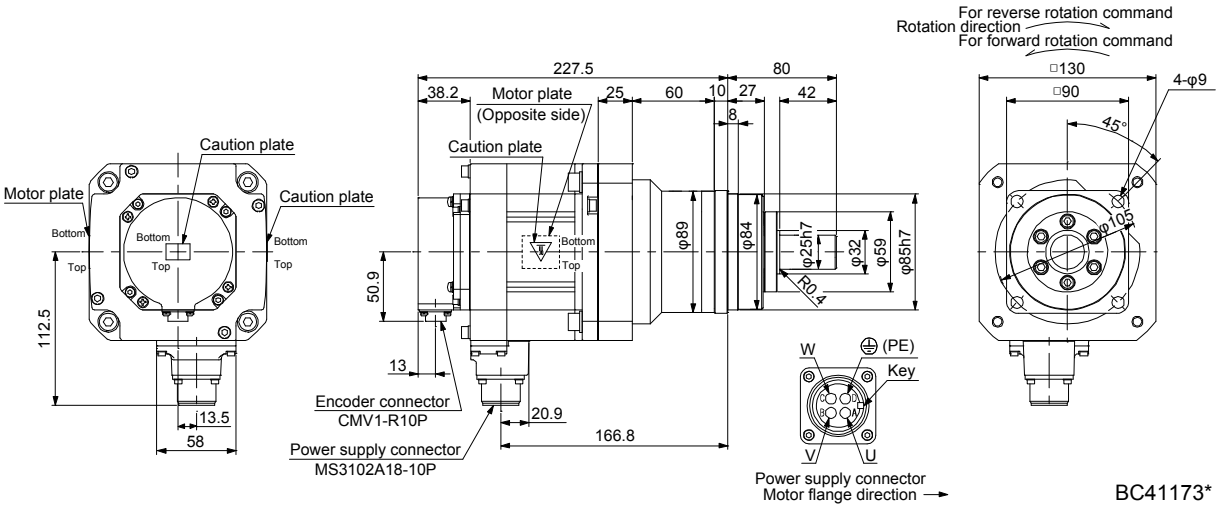

BC41173*

Model	Output [kW]	Reducer model	Reduction ratio	Moment of inertia J [× 10^{-4} kg•m^2]	Mass [kg]
HG-SR102G7 HG-SR1024G7	1.0	HPG-32A-11-J2MCSPS-S	1/11	15.0	15
		HPG-32A-21-J2MCSYS-S	1/21	14.5	

[Unit: mm]

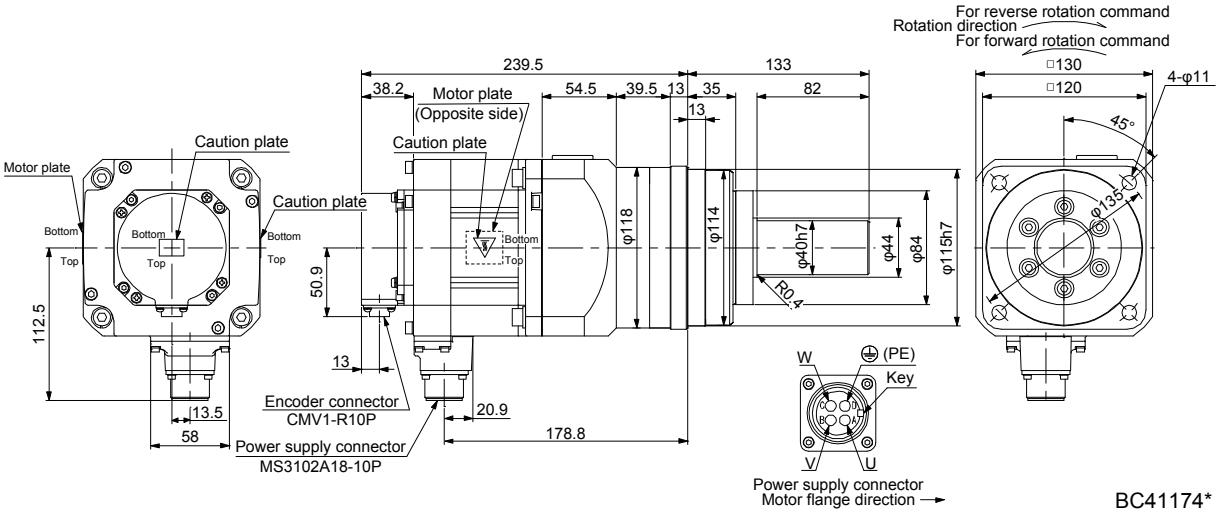

BC41174*

Model	Output [kW]	Reducer model	Reduction ratio	Moment of inertia J [× 10^{-4} kg•m^2]	Mass [kg]
HG-SR102G7	1.0	HPG-50A-33-J2AABC-S	1/33	16.3	26
HG-SR1024G7		HPG-50A-45-J2AABC-S	1/45	16.3	

[Unit: mm]

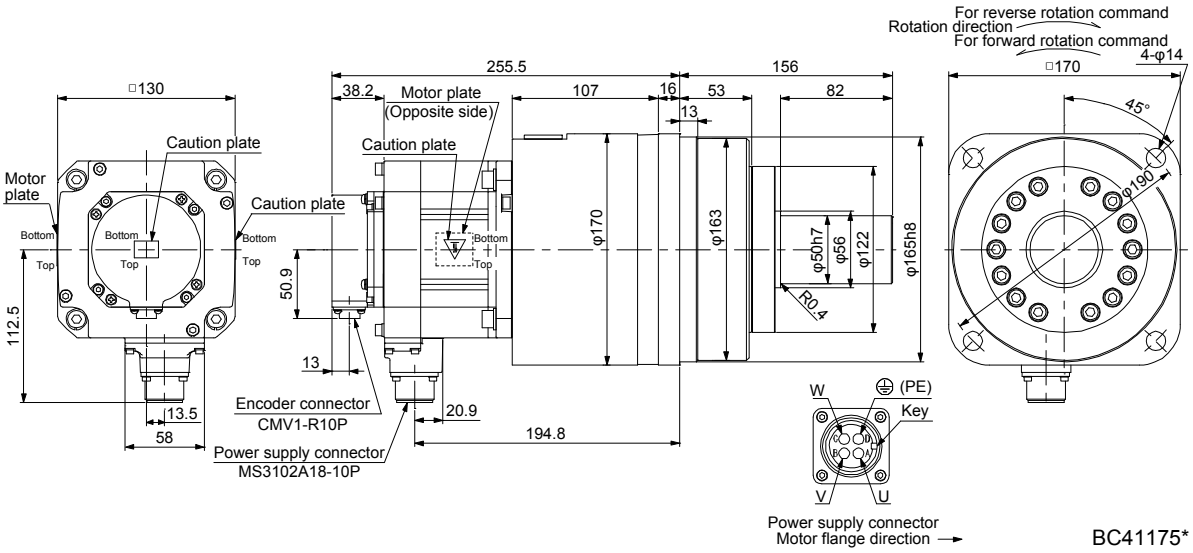

Model	Output [kW]	Reducer model	Reduction ratio	Moment of inertia J [× 10^{-4} kg•m^2]	Mass [kg]
HG-SR152G7 HG-SR1524G7	1.5	HPG-20A-05-J2KSAWS-S	1/5	16.7	11

[Unit: mm]

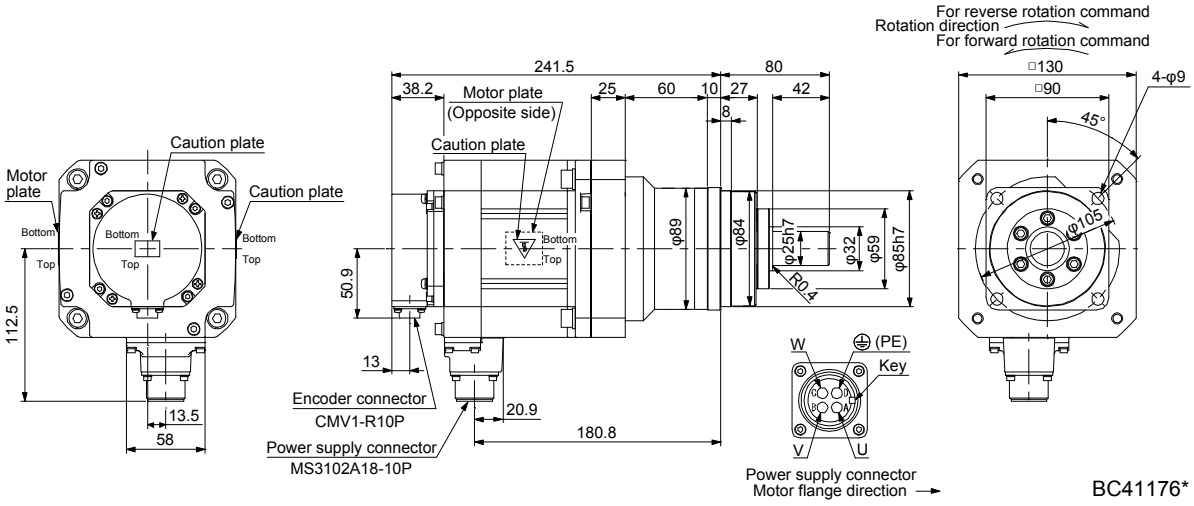

Model	Output [kW]	Reducer model	Reduction ratio	Moment of inertia J [× 10^{-4} kg•m^2]	Mass [kg]
HG-SR152G7 HG-SR1524G7	1.5	HPG-32A-11-J2MCSPS-S	1/11	19.4	16

[Unit: mm]

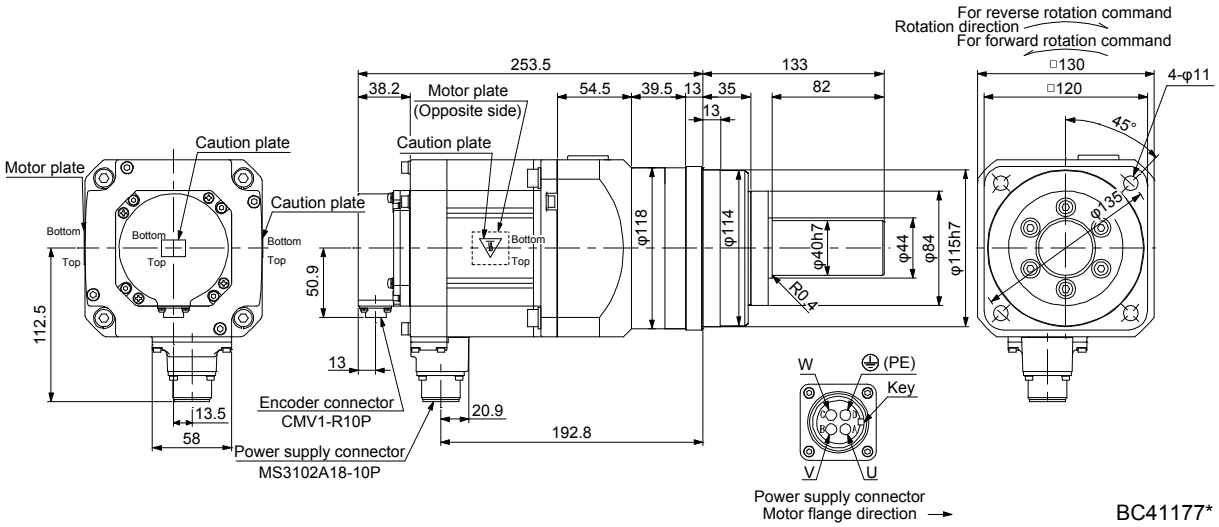

BC41177*

Model	Output [kW]	Reducer model	Reduction ratio	Moment of inertia J [× 10^{-4} kg•m^2]	Mass [kg]
HG-SR152G7 HG-SR1524G7	1.5	HPG-50A-21-J2AABC-S	1/21	21.7	27
		HPG-50A-33-J2AABC-S	1/33	20.7	
		HPG-50A-45-J2AABC-S	1/45	20.7	

[Unit: mm]

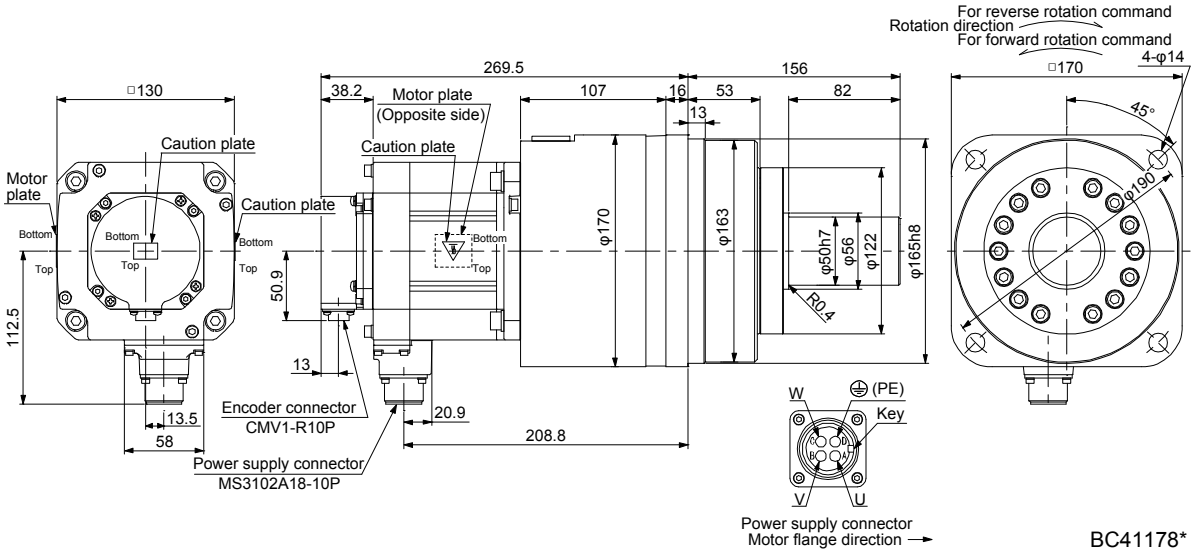

BC41178*

Model	Output [kW]	Reducer model	Reduction ratio	Moment of inertia J [× 10^{-4} kg•m^2]	Mass [kg]
HG-SR202G7 HG-SR2024G7	2.0	HPG-32A-05-J2PBZI-S	1/5	51.7	20
		HPG-32A-11-J2PBZJ-S	1/11	51.3	21

[Unit: mm]

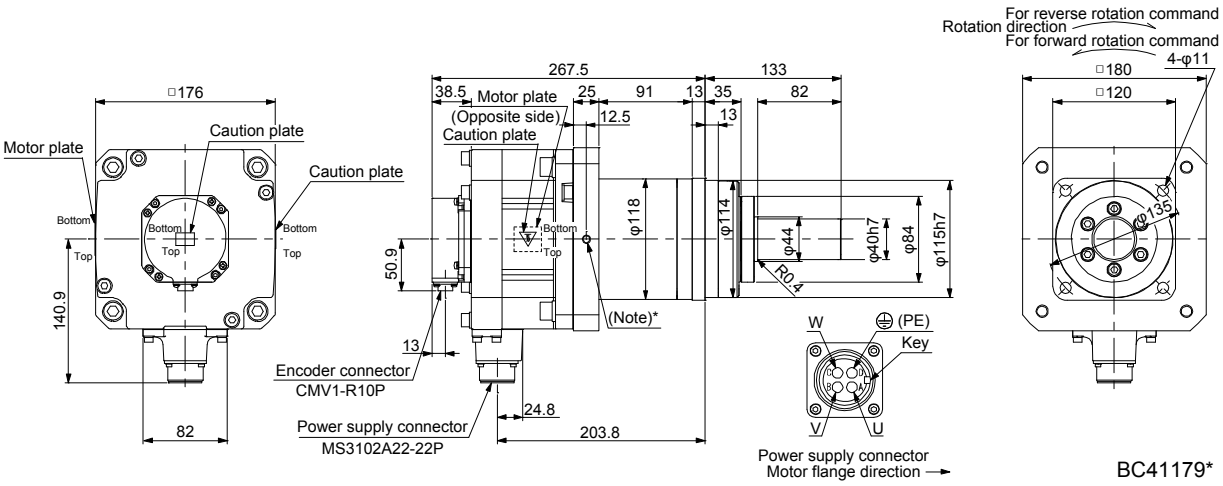

Note. * is a screw hole for eyebolt (M8).

Model	Output [kW]	Reducer model	Reduction ratio	Moment of inertia J [× 10^{-4} kg•m^2]	Mass [kg]
HG-SR202G7 HG-SR2024G7	2.0	HPG-50A-21-J2BBDF-S	1/21	53.3	32
		HPG-50A-33-J2BBDF-S	1/33	52.2	
		HPG-50A-45-J2BBDF-S	1/45	52.2	

[Unit: mm]

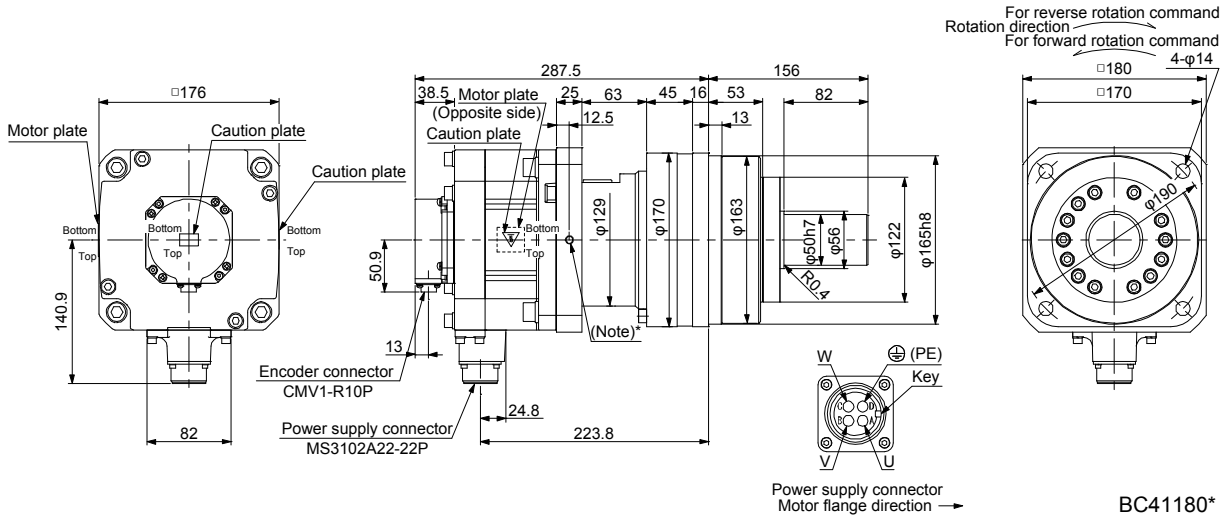

Note. * is a screw hole for eyebolt (M8).

Model	Output [kW]	Reducer model	Reduction ratio	Moment of inertia J [× 10^{-4} kg•m^2]	Mass [kg]
HG-SR352G7 HG-SR3524G7	3.5	HPG-32A-05-J2PBZI-S	1/5	83.5	25

[Unit: mm]

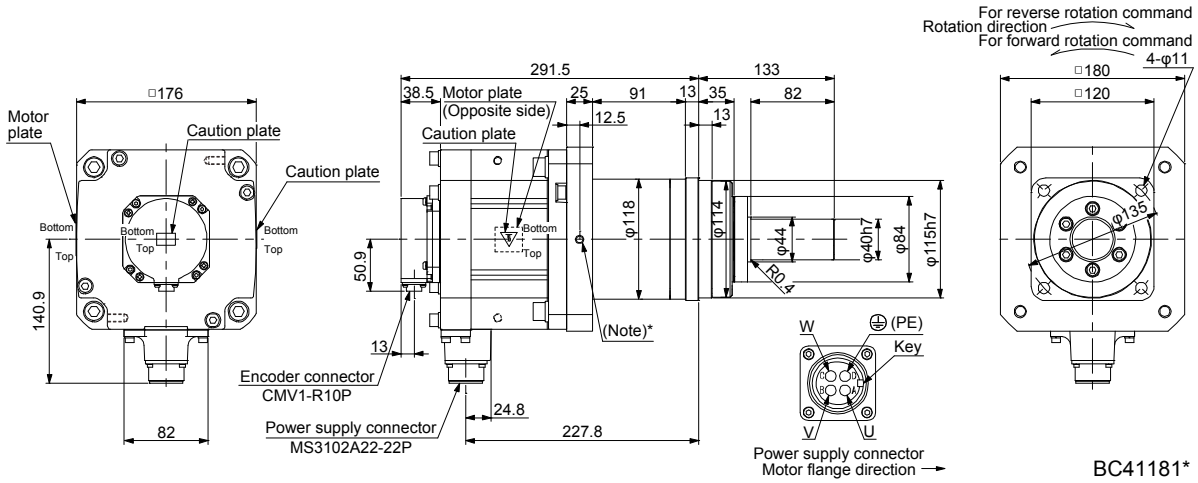

Note. * is a screw hole for eyebolt (M8).

Model	Output [kW]	Reducer model	Reduction ratio	Moment of inertia J [× 10^{-4} kg•m^2]	Mass [kg]
HG-SR352G7 HG-SR3524G7	3.5	HPG-50A-11-J2BBDF-S	1/11	87.0	37
		HPG-50A-21-J2BBDF-S	1/21	85.1	

[Unit: mm]

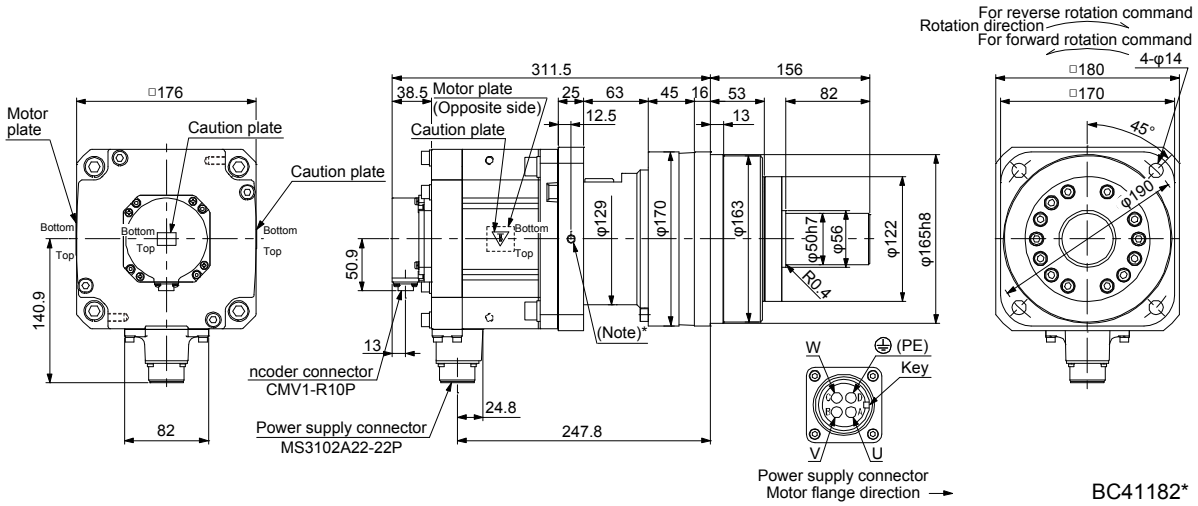

Note. * is a screw hole for eyebolt (M8).

Model	Output [kW]	Reducer model	Reduction ratio	Moment of inertia J [× 10^{-4} kg•m^2]	Mass [kg]
HG-SR502G7	5.0	HPG-50A-05-J2BBCF-S	1/5	111	39
HG-SR5024G7		HPG-50A-11-J2BBDF-S	1/11	108	41

[Unit: mm]

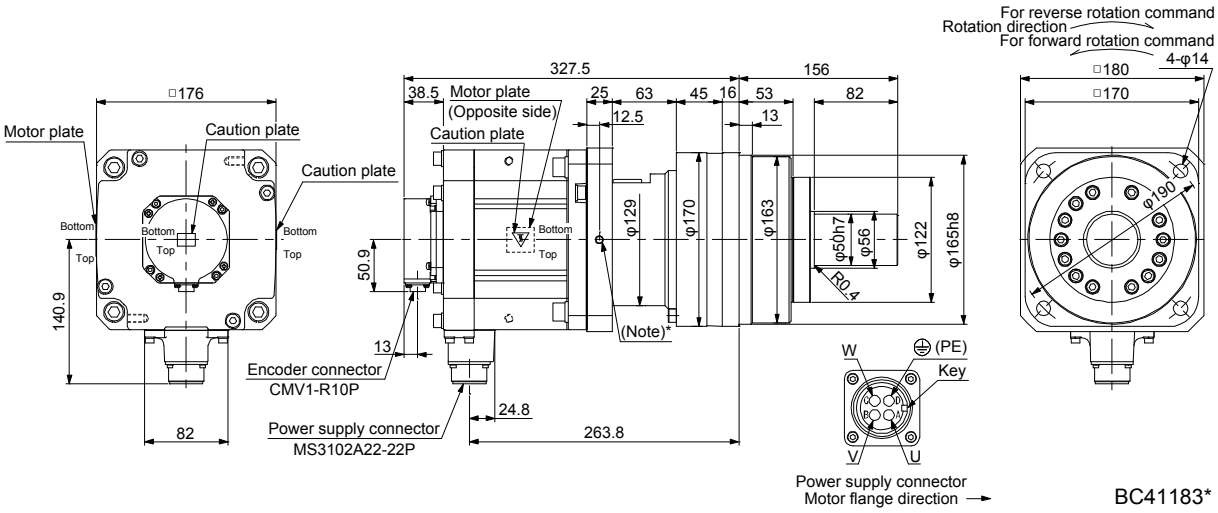

Note. * is a screw hole for eyebolt (M8).

Model	Output [kW]	Reducer model	Reduction ratio	Moment of inertia J [× 10^{-4} kg•m^2]	Mass [kg]
HG-SR702G7 HG-SR7024G7	7.0	HPG-50A-05-J2BBCF-S	1/5	163	46

[Unit: mm]

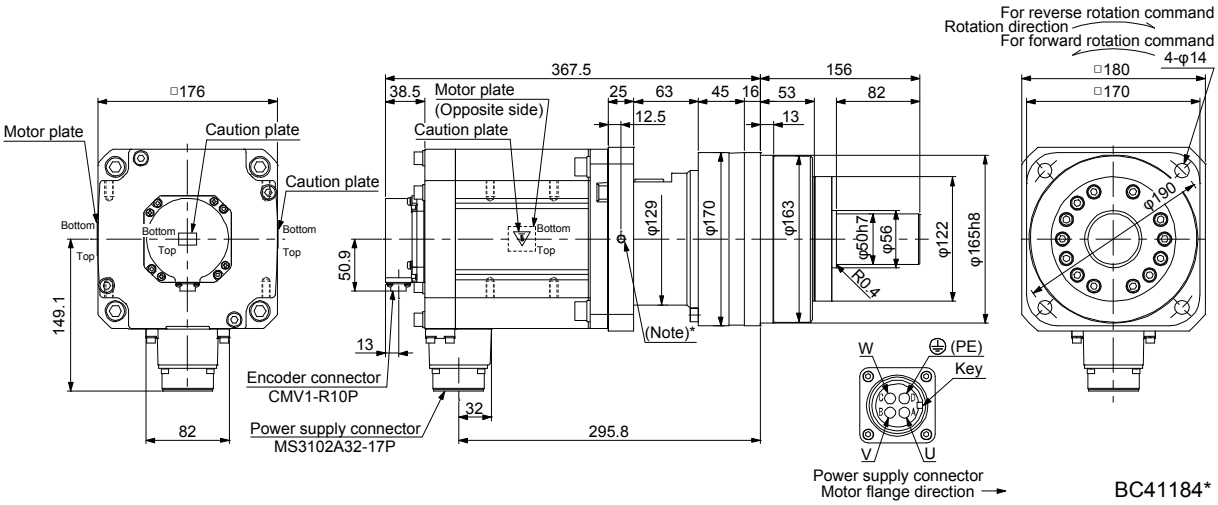

Note. * is a screw hole for eyebolt (M8).

7.7.10 With shaft-output type reducer for high precision applications, flange mounting (with an electromagnetic brake)

Model	Output [kW]	Reducer model	Reduction ratio	Brake static friction torque [N•m]	Moment of inertia J [× 10^{-4} kg•m^2]	Mass [kg]
HG-SR52BG7 HG-SR524BG7	0.5	HPG-20A-05-J2KSAWS-S	1/5	8.5	10.2	9.9
		HPG-20A-11-J2KSAXS-S	1/11		10.0	11

[Unit: mm]

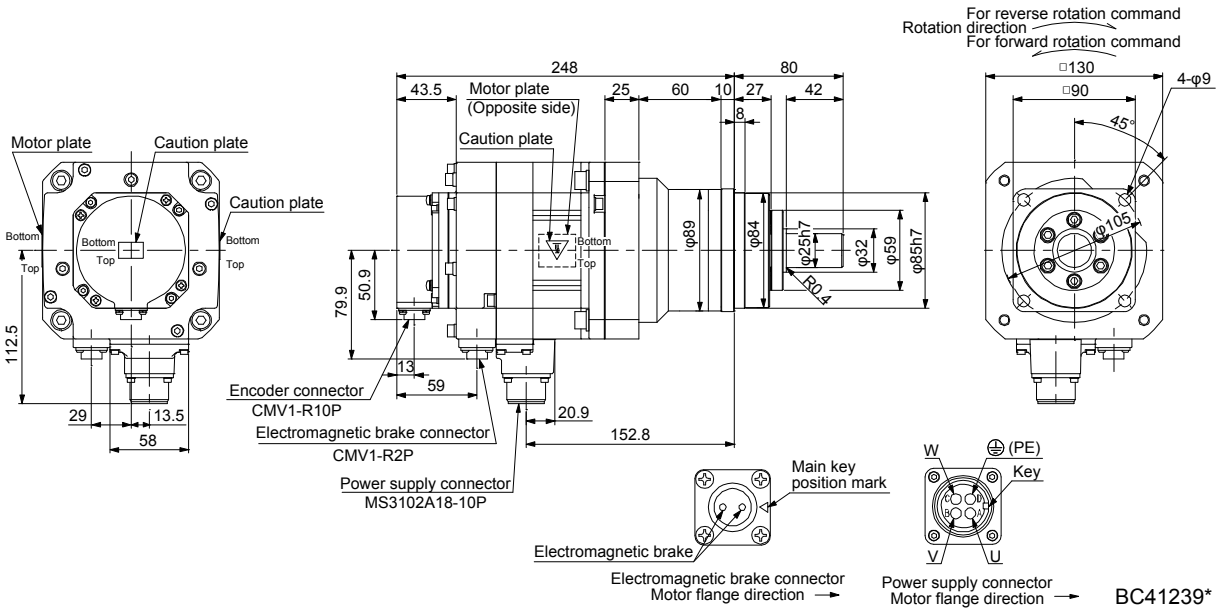

Model	Output [kW]	Reducer model	Reduction ratio	Brake static friction torque [N•m]	Moment of inertia J [× 10^{-4} kg•m^2]	Mass [kg]
HG-SR52BG7 HG-SR524BG7	0.5	HPG-32A-21-J2MCSYS-S	1/21	8.5	12.4	15
		HPG-32A-33-J2MCSZS-S	1/33		12.2	
		HPG-32A-45-J2MCSZS-S	1/45		12.2	

[Unit: mm]

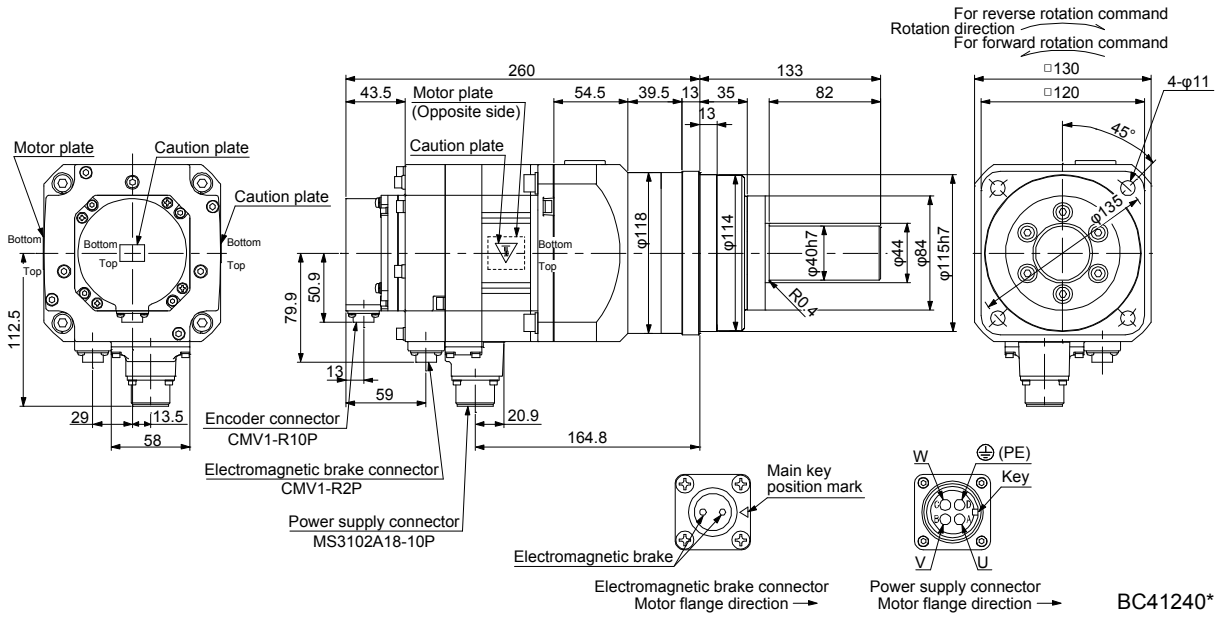

Model	Output [kW]	Reducer model	Reduction ratio	Brake static friction torque [N•m]	Moment of inertia J [× 10^{-4} kg•m^2]	Mass [kg]
HG-SR102BG7 HG-SR1024BG7	1.0	HPG-20A-05-J2KSAWS-S	1/5	8.5	14.5	12

[Unit: mm]

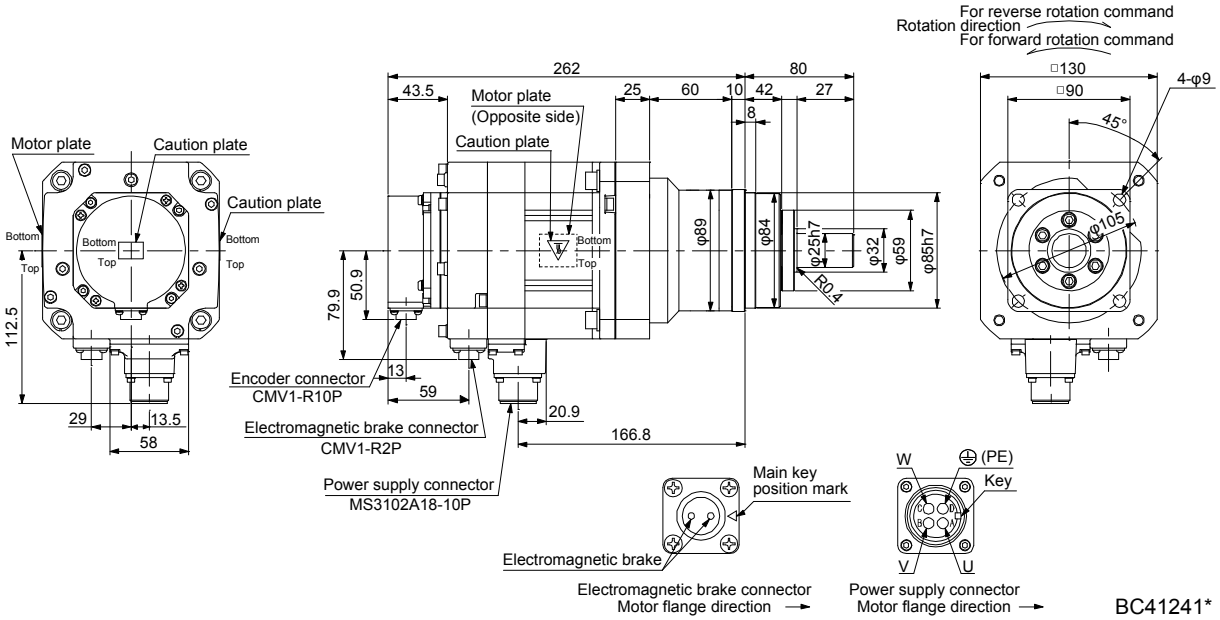

Model	Output [kW]	Reducer model	Reduction ratio	Brake static friction torque [N•m]	Moment of inertia J [× 10^{-4} kg•m^2]	Mass [kg]
HG-SR102BG7 HG-SR1024BG7	1.0	HPG-32A-11-J2MCSPS-S	1/11	8.5	17.2	17
		HPG-32A-21-J2MCSYS-S	1/21		16.7	

[Unit: mm]

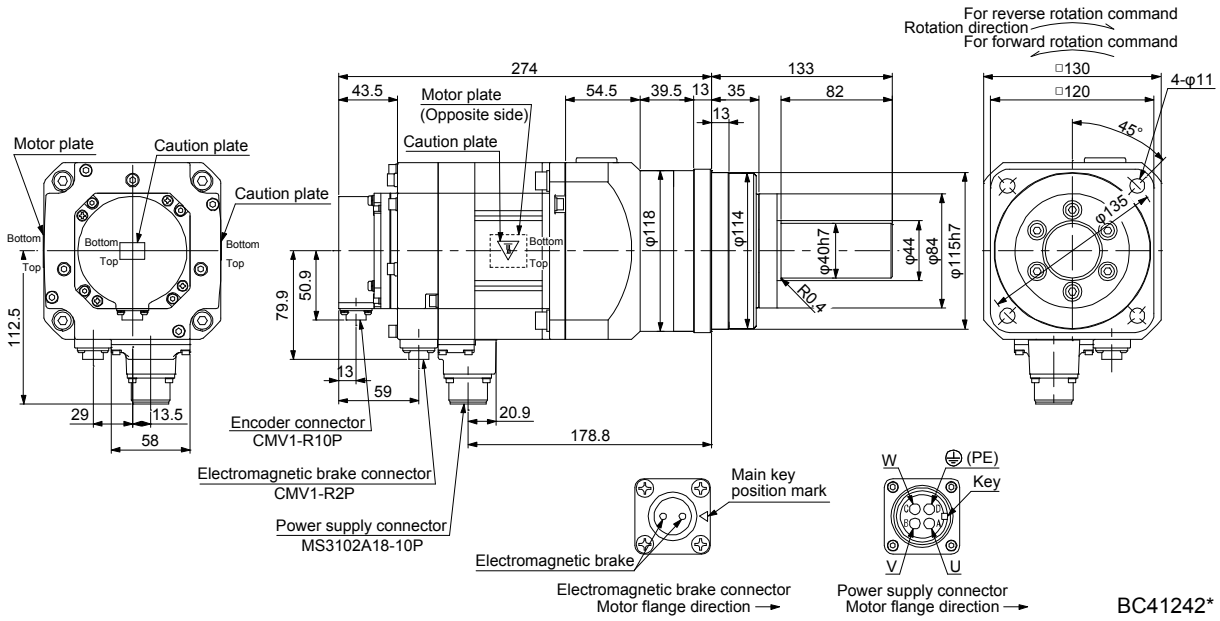

Model	Output [kW]	Reducer model	Reduction ratio	Brake static friction torque [N•m]	Moment of inertia J [× 10^{-4} kg•m^2]	Mass [kg]
HG-SR102BG7 HG-SR1024BG7	1.0	HPG-50A-33-J2AABC-S	1/33	8.5	18.5	28
		HPG-50A-45-J2AABC-S	1/45		18.5	

[Unit: mm]

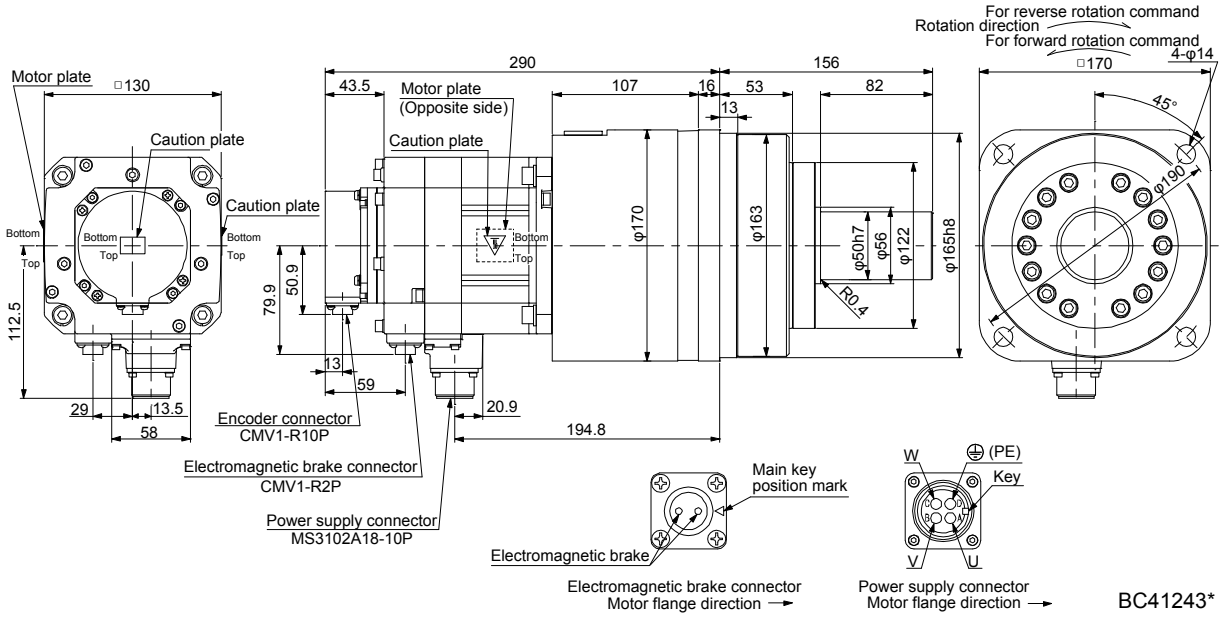

Model	Output [kW]	Reducer model	Reduction ratio	Brake static friction torque [N•m]	Moment of inertia J [× 10^{-4} kg•m^2]	Mass [kg]
HG-SR152BG7 HG-SR1524BG7	1.5	HPG-20A-05-J2KSAWS-S	1/5	8.5	18.9	13

[Unit: mm]

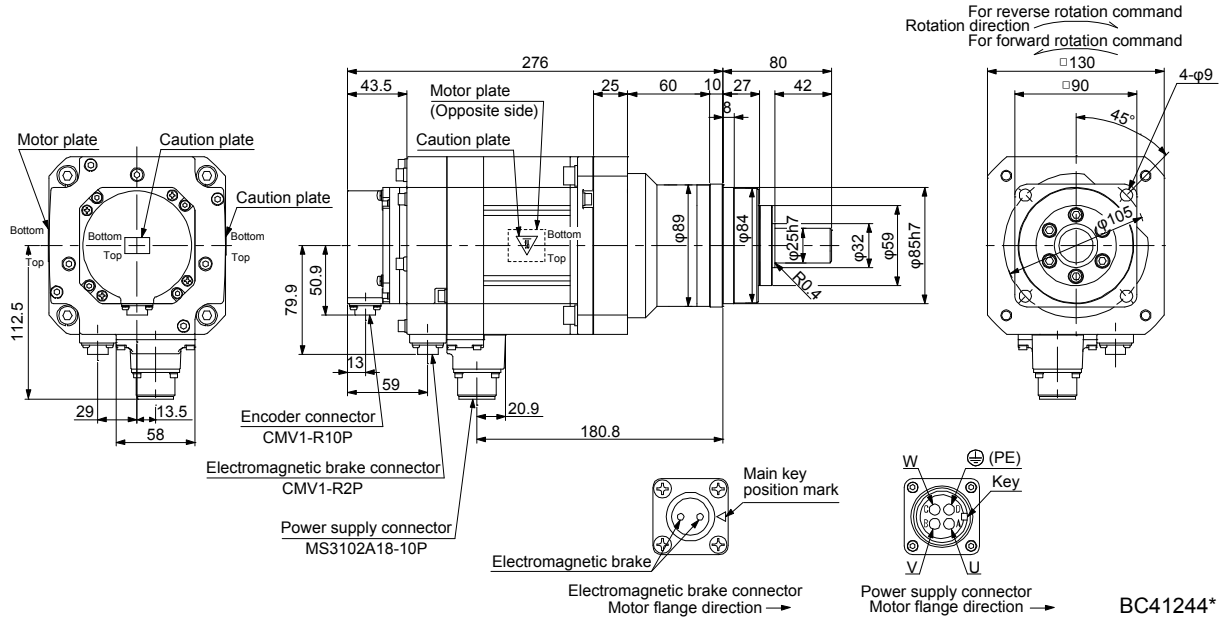

Model	Output [kW]	Reducer model	Reduction ratio	Brake static friction torque [N•m]	Moment of inertia J [× 10^{-4} kg•m^2]	Mass [kg]
HG-SR152BG7 HG-SR1524BG7	1.5	HPG-32A-11-J2MCSPS-S	1/11	8.5	21.6	18

[Unit: mm]

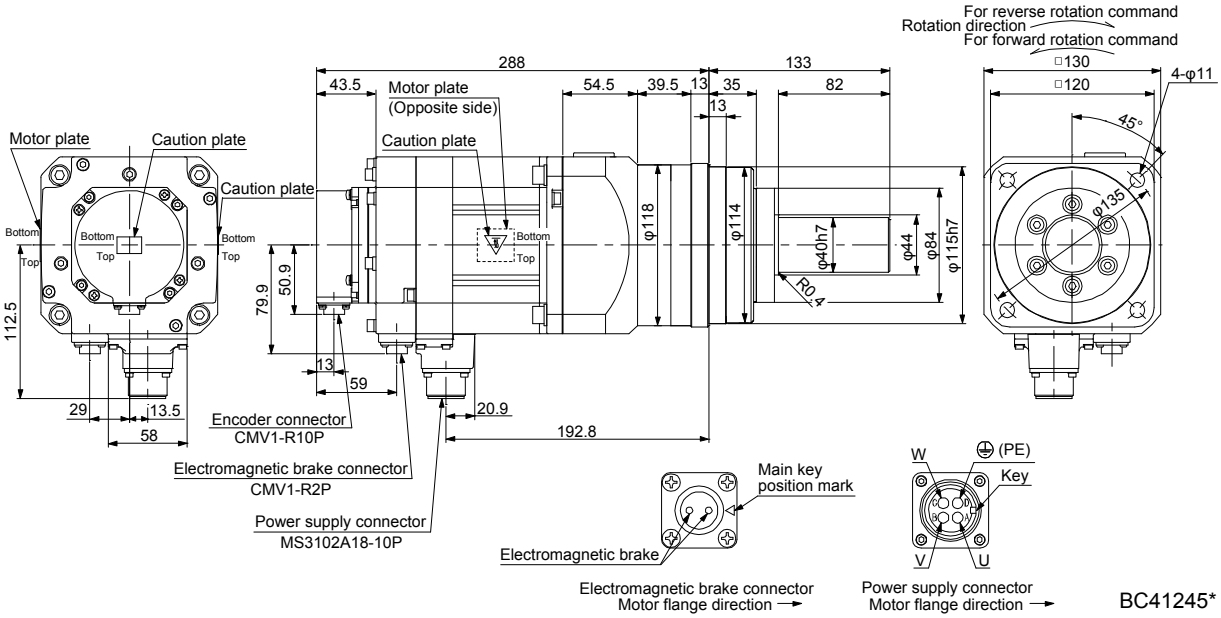

Model	Output [kW]	Reducer model	Reduction ratio	Brake static friction torque [N•m]	Moment of inertia J [× 10^{-4} kg•m^2]	Mass [kg]
HG-SR152BG7 HG-SR1524BG7	1.5	HPG-50A-21-J2AABC-S	1/21	8.5	23.9	29
		HPG-50A-33-J2AABC-S	1/33		22.9	
		HPG-50A-45-J2AABC-S	1/45		22.9	

[Unit: mm]

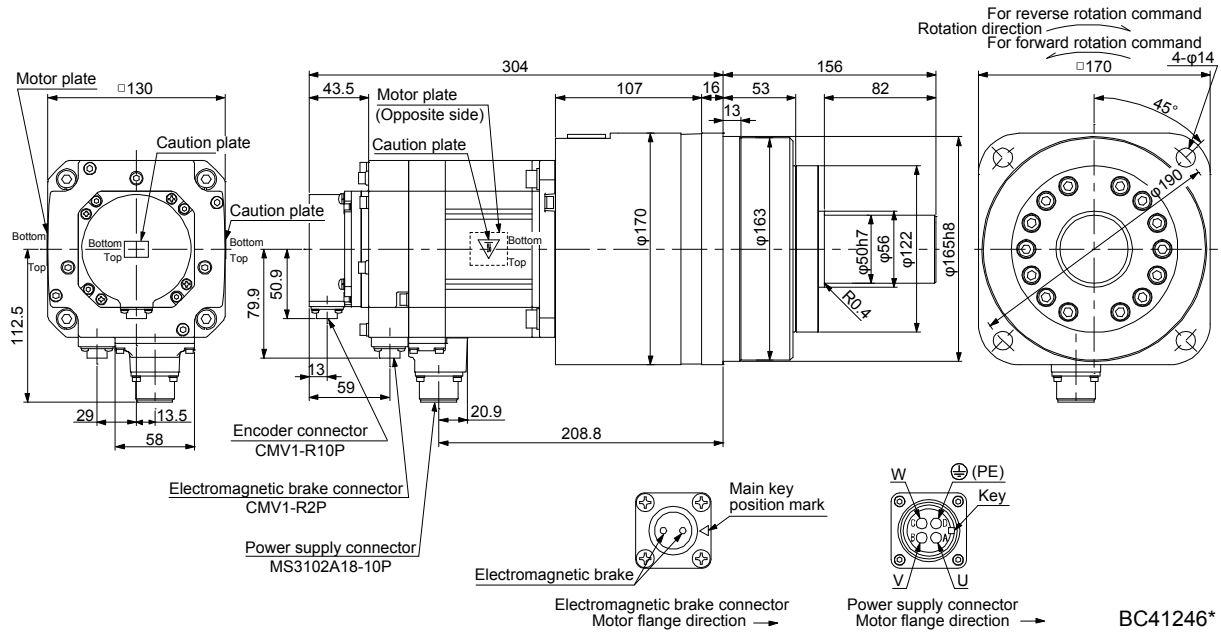

Model	Output [kW]	Reducer model	Reduction ratio	Brake static friction torque [N•m]	Moment of inertia J [× 10^{-4} kg•m^2]	Mass [kg]
HG-SR202BG7 HG-SR2024BG7	2.0	HPG-32A-05-J2PBZI-S	1/5	44	61.4	26
		HPG-32A-11-J2PBZJ-S	1/11		61.0	27

[Unit: mm]

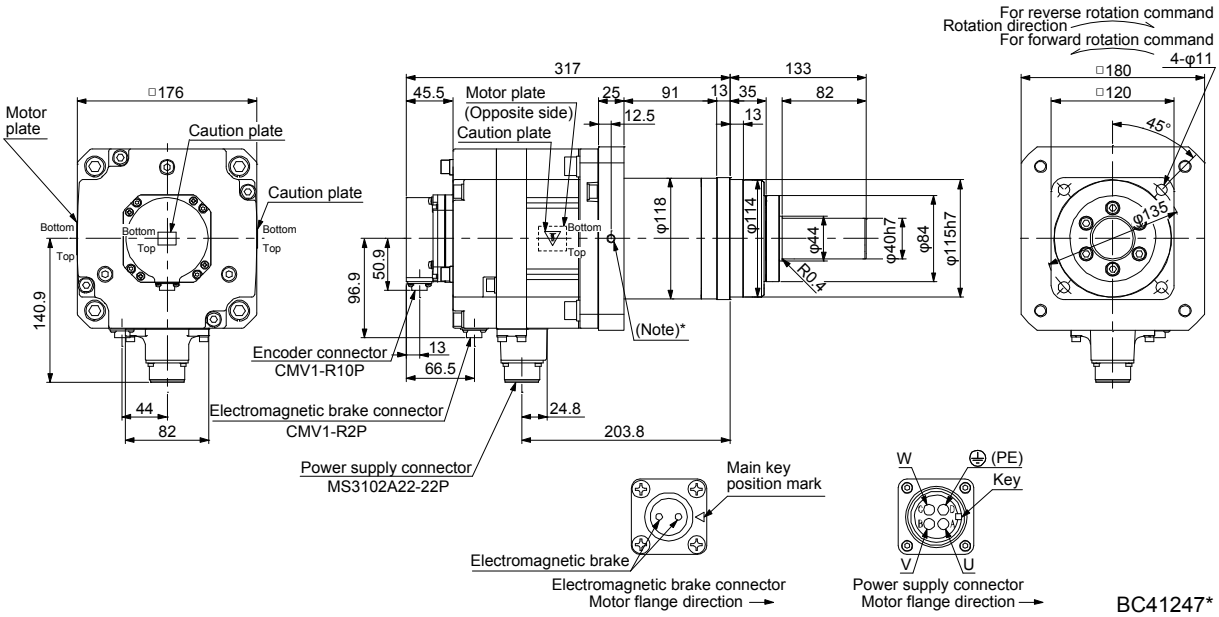

Note. * is a screw hole for eyebolt (M8).

Model	Output [kW]	Reducer model	Reduction ratio	Brake static friction torque [N•m]	Moment of inertia J [× 10^{-4} kg•m^2]	Mass [kg]
HG-SR202BG7 HG-SR2024BG7	2.0	HPG-50A-21-J2BBDF-S	1/21	44	63.0	38
		HPG-50A-33-J2BBDF-S	1/33		61.9	
		HPG-50A-45-J2BBDF-S	1/45		61.9	

[Unit: mm]

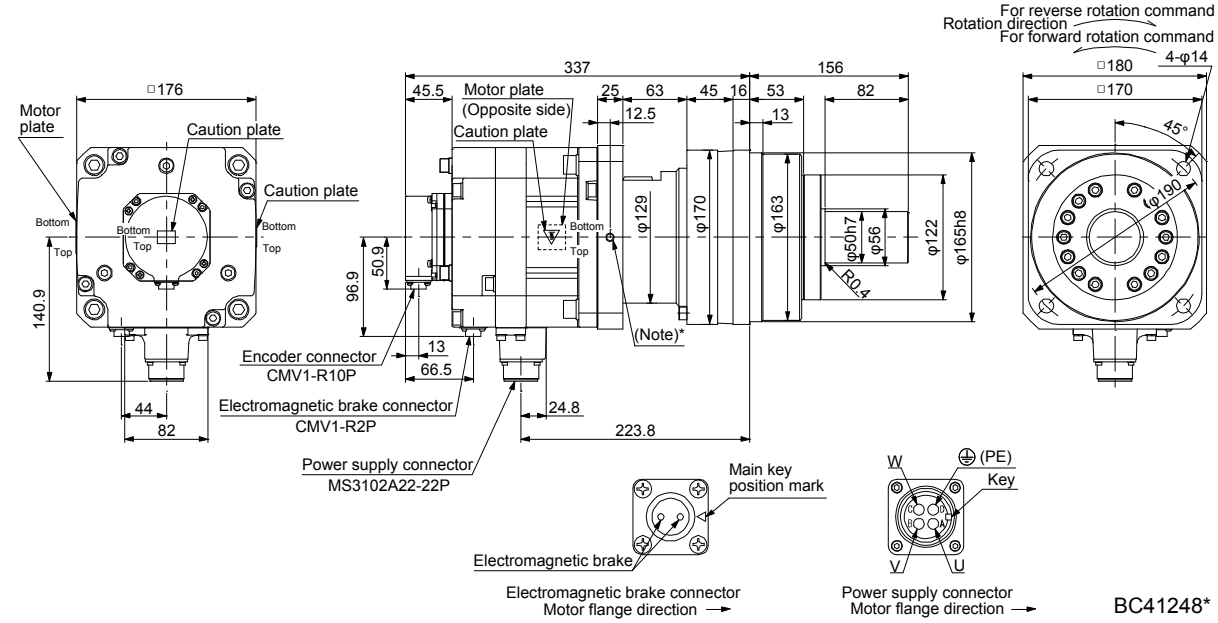

Note. * is a screw hole for eyebolt (M8).

Model	Output [kW]	Reducer model	Reduction ratio	Brake static friction torque [N•m]	Moment of inertia J [× 10^{-4} kg•m^2]	Mass [kg]
HG-SR352BG7 HG-SR3524BG7	3.5	HPG-32A-05-J2PBZI-S	1/5	44	93.1	31

[Unit: mm]

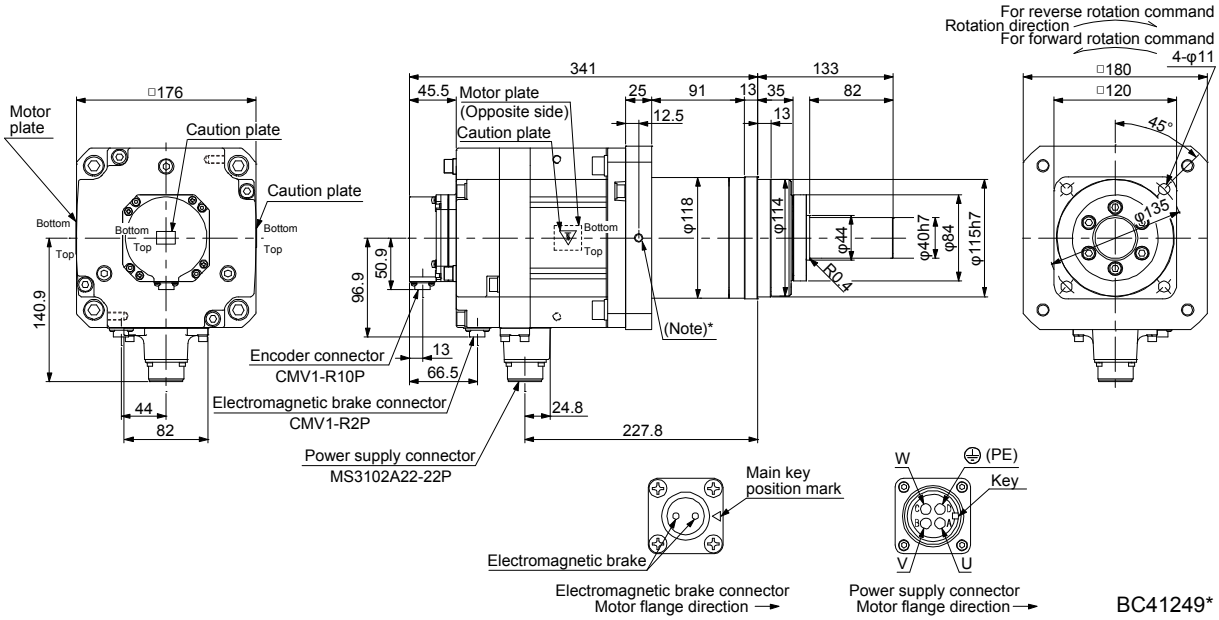

Note. * is a screw hole for eyebolt (M8).

Model	Output [kW]	Reducer model	Reduction ratio	Brake static friction torque [N•m]	Moment of inertia J [× 10^{-4} kg•m^2]	Mass [kg]
HG-SR352BG7 HG-SR3524BG7	3.5	HPG-50A-11-J2BBDF-S	1/11	44	96.6	43
		HPG-50A-21-J2BBDF-S	1/21		94.7	

[Unit: mm]

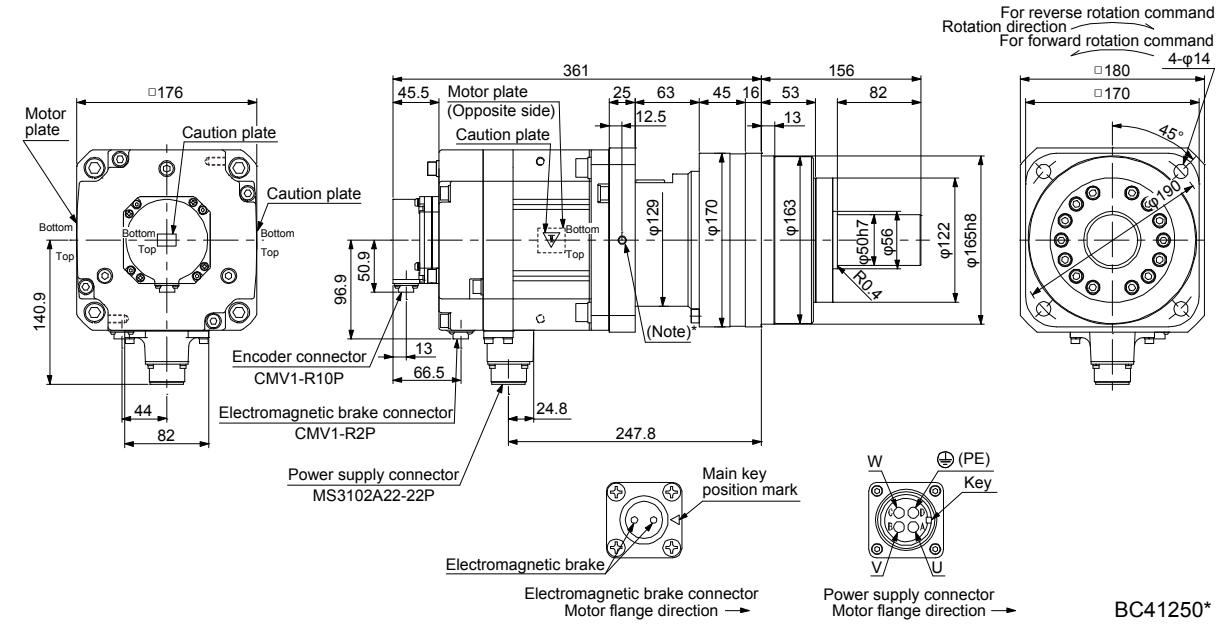

Note. * is a screw hole for eyebolt (M8).

Model	Output [kW]	Reducer model	Reduction ratio	Brake static friction torque [N•m]	Moment of inertia J [× 10^{-4} kg•m^2]	Mass [kg]
HG-SR502BG7 HG-SR5024BG7	5.0	HPG-50A-05-J2BBCF-S	1/5	44	121	45
		HPG-50A-11-J2BBDF-S	1/11		117	47

[Unit: mm]

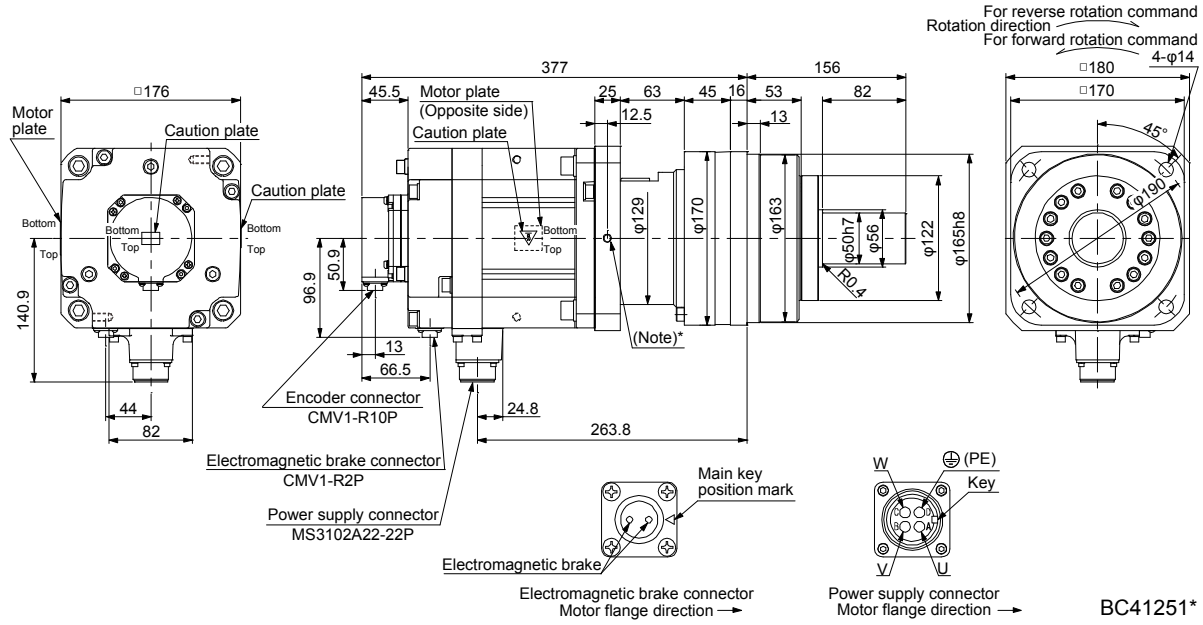

Note. * is a screw hole for eyebolt (M8).

Model	Output [kW]	Reducer model	Reduction ratio	Brake static friction torque [N•m]	Moment of inertia J [× 10^{-4} kg•m^2]	Mass [kg]
HG-SR702BG7 HG-SR7024BG7	7.0	HPG-50A-05-J2BBCF-S	1/5	44	173	52

[Unit: mm]

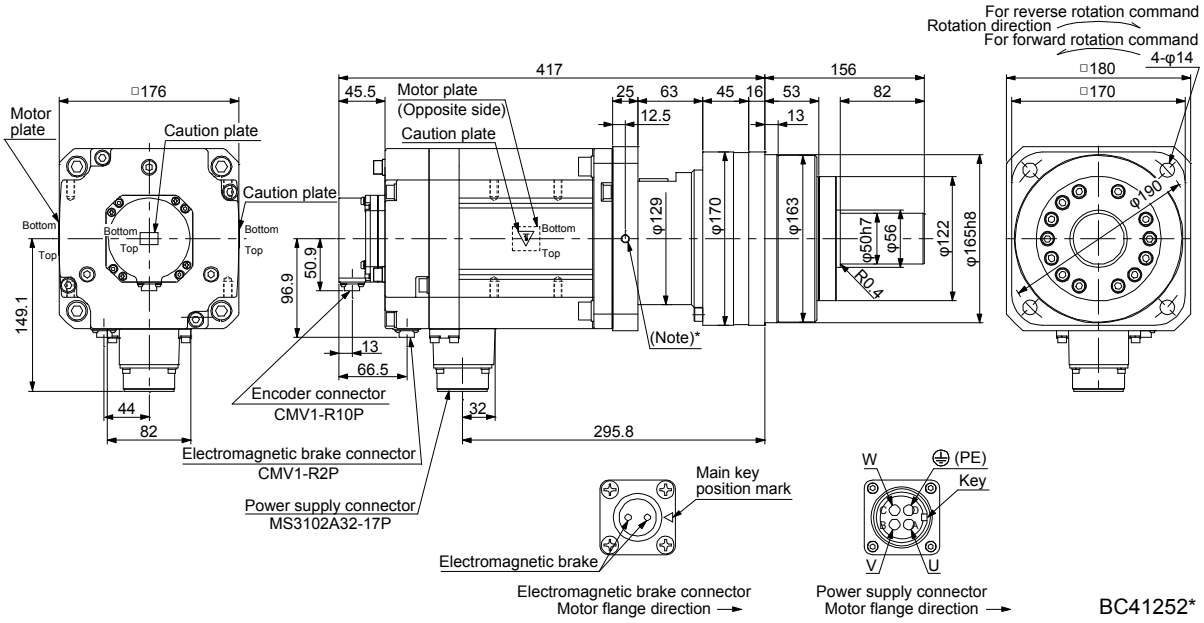

Note. * is a screw hole for eyebolt (M8).

8. HG-JR SERIES

POINT
●The 1500 r/min series servo motor of 22 kW or more and 1000 r/min series servo motor of 15 kW or more with an electromagnetic brake are not available.

This chapter provides information on the servo motor specifications and characteristics. When using the HG-JR series servo motor, always read the Safety Instructions in the beginning of this manual and chapters 1 to 5, in addition to this chapter.

8.1 Model designation

The following describes model designation. Not all combinations of the symbols are available.

HG-JR534BKW0C

Series

Rated output

Symbol	Rated output [kW]
5	0.5
7	0.75
10	1
15	1.5
20	2
35	3.5
50	5
60	6
70	7
80	8
90	9
11K	11
12K	12
15K	15
20K	20
22K	22
25K	25
30K	30
37K	37
45K	45
55K	55

Special specification

Symbol	Special specification
None	Standard
(Note 2) W0C	Servo motor with functional safety

Shaft type

Symbol	Shaft shape
None	Standard (straight shaft)
K	(Note 1) Keyway shaft

Electromagnetic brake

Symbol	Electromagnetic brake
None	None
B	With

Power supply voltage of servo amplifier

Symbol	Voltage
None	3-phase 200 V AC to 240 V AC
4	3-phase 380 V AC to 480 V AC

Rated speed

Symbol	Speed [r/min]
1	1000
1M	1500
3	3000

Appearance

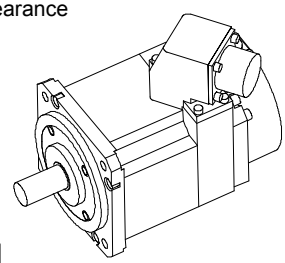

Note 1. Key is not included.
2. Refer to section 1.5 for details.

8.2 Combination list of servo motors and servo amplifiers/drive units

POINT
●MR-J4-11KGF(4)(-RJ) to MR-J4-22KGF(4)(-RJ) will be available in the future.

(1) Compatible with 3-phase 200 V AC

(a) 3000 r/min series

<table>
<tr><th rowspan="3">Servo motor</th><th colspan="4">Servo amplifier</th></tr>
<tr><th colspan="2">MR-J4 1-axis</th><th colspan="2">MR-J4 2-axis</th></tr>
<tr><th>Standard</th><th>When the maximum torque is 400% (Note 1)</th><th>Standard</th><th>When the maximum torque is 400% (Note 1)</th></tr>
<tr><td>HG-JR53 (Note 2)</td><td>MR-J4-60A
MR-J4-60A-RJ
MR-J4-60B
MR-J4-60B-RJ
MR-J4-60B-RJ010
MR-J4-60B-RJ020
MR-J4-60GF
MR-J4-60GF-RJ</td><td>MR-J4-100A
MR-J4-100A-RJ
MR-J4-100B
MR-J4-100B-RJ
MR-J4-100B-RJ010
MR-J4-100B-RJ020
MR-J4-100GF
MR-J4-100GF-RJ</td><td>MR-J4W2-77B</td><td>MR-J4W2-1010B</td></tr>
<tr><td>HG-JR73 (Note 2)</td><td>MR-J4-70A
MR-J4-70A-RJ
MR-J4-70B
MR-J4-70B-RJ
MR-J4-70B-RJ010
MR-J4-70B-RJ020
MR-J4-70GF
MR-J4-70GF-RJ</td><td rowspan="2">MR-J4-200A
MR-J4-200A-RJ
MR-J4-200B
MR-J4-200B-RJ
MR-J4-200B-RJ010
MR-J4-200B-RJ020
MR-J4-200GF
MR-J4-200GF-RJ</td><td>MR-J4W2-77B
MR-J4W2-1010B</td><td rowspan="5"></td></tr>
<tr><td>HG-JR103
(Note 2)</td><td>MR-J4-100A
MR-J4-100A-RJ
MR-J4-100B
MR-J4-100B-RJ
MR-J4-100B-RJ010
MR-J4-100B-RJ020
MR-J4-100GF
MR-J4-100GF-RJ</td><td>MR-J4W2-1010B</td></tr>
<tr><td>HG-JR153</td><td rowspan="2">MR-J4-200A
MR-J4-200A-RJ
MR-J4-200B
MR-J4-200B-RJ
MR-J4-200B-RJ010
MR-J4-200B-RJ020
MR-J4-200GF
MR-J4-200GF-RJ</td><td rowspan="2">MR-J4-350A
MR-J4-350A-RJ
MR-J4-350B
MR-J4-350B-RJ
MR-J4-350B-RJ010
MR-J4-350B-RJ020
MR-J4-350GF
MR-J4-350GF-RJ</td><td rowspan="3"></td></tr>
<tr><td>HG-JR203</td></tr>
<tr><td>HG-JR353</td><td>MR-J4-350A
MR-J4-350A-RJ
MR-J4-350B
MR-J4-350B-RJ
MR-J4-350B-RJ010
MR-J4-350B-RJ020
MR-J4-350GF
MR-J4-350GF-RJ</td><td>MR-J4-500A
MR-J4-500A-RJ
MR-J4-500B
MR-J4-500B-RJ
MR-J4-500B-RJ010
MR-J4-500B-RJ020
MR-J4-500GF
MR-J4-500GF-RJ</td></tr>
</table>

Servo motor	Servo amplifier			
	MR-J4 1-axis		MR-J4 2-axis	
	Standard	When the maximum torque is 400% (Note 1)	Standard	When the maximum torque is 400% (Note 1)
HG-JR503	MR-J4-500A MR-J4-500A-RJ MR-J4-500B MR-J4-500B-RJ MR-J4-500B-RJ010 MR-J4-500B-RJ020 MR-J4-500GF MR-J4-500GF-RJ	MR-J4-700A MR-J4-700A-RJ MR-J4-700B MR-J4-700B-RJ MR-J4-700B-RJ010 MR-J4-700B-RJ020 MR-J4-700GF MR-J4-700GF-RJ		
HG-JR703	MR-J4-700A MR-J4-700A-RJ MR-J4-700B MR-J4-700B-RJ MR-J4-700B-RJ010 MR-J4-700B-RJ020 MR-J4-700GF MR-J4-700GF-RJ			
HG-JR903	MR-J4-11KA MR-J4-11KA-RJ MR-J4-11KB MR-J4-11KB-RJ MR-J4-11KB-RJ010 MR-J4-11KB-RJ020 MR-J4-11KGF MR-J4-11KGF-RJ			

Note 1. The maximum torque can be increased to 400% by changing the servo amplifier.
2. This cannot be used on the assumption that the maximum torque is 400% when you use it with the 1-phase 200 V AC input.

(b) 1500 r/min series

Servo motor	Servo amplifier	Drive unit
HG-JR701M	MR-J4-700A MR-J4-700A-RJ MR-J4-700B MR-J4-700B-RJ MR-J4-700B-RJ010 MR-J4-700B-RJ020 MR-J4-700GF MR-J4-700GF-RJ	
HG-JR11K1M	MR-J4-11KA MR-J4-11KA-RJ MR-J4-11KB MR-J4-11KB-RJ MR-J4-11KB-RJ010 MR-J4-11KB-RJ020 MR-J4-11KGF MR-J4-11KGF-RJ	
HG-JR15K1M	MR-J4-15KA MR-J4-15KA-RJ MR-J4-15KB MR-J4-15KB-RJ MR-J4-15KB-RJ010 MR-J4-15KB-RJ020 MR-J4-15KGF MR-J4-15KGF-RJ	
HG-JR22K1M	MR-J4-22KA MR-J4-22KA-RJ MR-J4-22KB MR-J4-22KB-RJ MR-J4-22KB-RJ010 MR-J4-22KB-RJ020 MR-J4-22KGF MR-J4-22KGF-RJ	
HG-JR30K1M		MR-J4-DU30KA MR-J4-DU30KA-RJ MR-J4-DU30KB MR-J4-DU30KB-RJ MR-J4-DU30KB-RJ020
HG-JR37K1M		MR-J4-DU37KA MR-J4-DU37KA-RJ MR-J4-DU37KB MR-J4-DU37KB-RJ MR-J4-DU37KB-RJ020

(c) 1000 r/min series

Servo motor	Servo amplifier	Drive unit
HG-JR601	MR-J4-700A MR-J4-700A-RJ MR-J4-700B MR-J4-700B-RJ MR-J4-700B-RJ010 MR-J4-700B-RJ020 MR-J4-700GF MR-J4-700GF-RJ	
HG-JR801	MR-J4-11KA MR-J4-11KA-RJ MR-J4-11KB MR-J4-11KB-RJ MR-J4-11KB-RJ010 MR-J4-11KB-RJ020 MR-J4-11KGF MR-J4-11KGF-RJ	
HG-JR12K1		
HG-JR15K1	MR-J4-15KA MR-J4-15KA-RJ MR-J4-15KB MR-J4-15KB-RJ MR-J4-15KB-RJ010 MR-J4-15KB-RJ020 MR-J4-15KGF MR-J4-15KGF-RJ	
HG-JR20K1	MR-J4-22KA MR-J4-22KA-RJ MR-J4-22KB MR-J4-22KB-RJ MR-J4-22KB-RJ010 MR-J4-22KB-RJ020 MR-J4-22KGF MR-J4-22KGF-RJ	
HG-JR25K1		
HG-JR30K1		MR-J4-DU30KA MR-J4-DU30KA-RJ MR-J4-DU30KB MR-J4-DU30KB-RJ MR-J4-DU30KB-RJ020
HG-JR37K1		MR-J4-DU37KA MR-J4-DU37KA-RJ MR-J4-DU37KB MR-J4-DU37KB-RJ MR-J4-DU37KB-RJ020

(2) Compatible with 3-phase 400 V AC

(a) 3000 r/min series

Servo motor	Servo amplifier	
	Standard	When the maximum torque is 400% (Note)
HG-JR534	MR-J4-60A4 MR-J4-60A4-RJ MR-J4-60B4 MR-J4-60B4-RJ MR-J4-60B4-RJ010 MR-J4-60B4-RJ020 MR-J4-60GF4 MR-J4-60GF4-RJ	MR-J4-100A4 MR-J4-100A4-RJ MR-J4-100B4 MR-J4-100B4-RJ MR-J4-100B4-RJ010 MR-J4-100B4-RJ020 MR-J4-100GF4 MR-J4-100GF4-RJ
HG-JR734	MR-J4-100A4 MR-J4-100A4-RJ MR-J4-100B4 MR-J4-100B4-RJ MR-J4-100B4-RJ010 MR-J4-100B4-RJ020 MR-J4-100GF4 MR-J4-100GF4-RJ	MR-J4-200A4 MR-J4-200A4-RJ MR-J4-200B4 MR-J4-200B4-RJ MR-J4-200B4-RJ010 MR-J4-200B4-RJ020 MR-J4-200GF4 MR-J4-200GF4-RJ
HG-JR1034		
HG-JR1534	MR-J4-200A4 MR-J4-200A4-RJ MR-J4-200B4 MR-J4-200B4-RJ MR-J4-200B4-RJ010 MR-J4-200B4-RJ020 MR-J4-200GF4 MR-J4-200GF4-RJ	MR-J4-350A4 MR-J4-350A4-RJ MR-J4-350B4 MR-J4-350B4-RJ MR-J4-350B4-RJ010 MR-J4-350B4-RJ020 MR-J4-350GF4 MR-J4-350GF4-RJ
HG-JR2034		
HG-JR3534	MR-J4-350A4 MR-J4-350A4-RJ MR-J4-350B4 MR-J4-350B4-RJ MR-J4-350B4-RJ010 MR-J4-350B4-RJ020 MR-J4-350GF4 MR-J4-350GF4-RJ	MR-J4-500A4 MR-J4-500A4-RJ MR-J4-500B4 MR-J4-500B4-RJ MR-J4-500B4-RJ010 MR-J4-500B4-RJ020 MR-J4-500GF4 MR-J4-500GF4-RJ
HG-JR5034	MR-J4-500A4 MR-J4-500A4-RJ MR-J4-500B4 MR-J4-500B4-RJ MR-J4-500B4-RJ010 MR-J4-500B4-RJ020 MR-J4-500GF4 MR-J4-500GF4-RJ	MR-J4-700A4 MR-J4-700A4-RJ MR-J4-700B4 MR-J4-700B4-RJ MR-J4-700B4-RJ010 MR-J4-700B4-RJ020 MR-J4-700GF4 MR-J4-700GF4-RJ

Servo motor	Servo amplifier
HG-JR7034	MR-J4-700A4 MR-J4-700A4-RJ MR-J4-700B4 MR-J4-700B4-RJ MR-J4-700B4-RJ010 MR-J4-700B4-RJ020 MR-J4-700GF4 MR-J4-700GF4-RJ
HG-JR9034	MR-J4-11KA4 MR-J4-11KA4-RJ MR-J4-11KB4 MR-J4-11KB4-RJ MR-J4-11KB4-RJ010 MR-J4-11KB4-RJ020 MR-J4-11KGF4 MR-J4-11KGF4-RJ

Note. The maximum torque can be increased to 400% by changing the servo amplifier.

(b) 1500 r/min series

Servo motor	Servo amplifier	Drive unit
HG-JR701M4	MR-J4-700A4 MR-J4-700A4-RJ MR-J4-700B4 MR-J4-700B4-RJ MR-J4-700B4-RJ010 MR-J4-700B4-RJ020 MR-J4-700GF4 MR-J4-700GF4-RJ	
HG-JR11K1M4	MR-J4-11KA4 MR-J4-11KA4-RJ MR-J4-11KB4 MR-J4-11KB4-RJ MR-J4-11KB4-RJ010 MR-J4-11KB4-RJ020 MR-J4-11KGF4 MR-J4-11KGF4-RJ	
HG-JR15K1M4	MR-J4-15KA4 MR-J4-15KA4-RJ MR-J4-15KB4 MR-J4-15KB4-RJ MR-J4-15KB4-RJ010 MR-J4-15KB4-RJ020 MR-J4-15KGF4 MR-J4-15KGF4-RJ	
HG-JR22K1M4	MR-J4-22KA4 MR-J4-22KA4-RJ MR-J4-22KB4 MR-J4-22KB4-RJ MR-J4-22KB4-RJ010 MR-J4-22KB4-RJ020 MR-J4-22KGF4 MR-J4-22KGF4-RJ	
HG-JR30K1M4		MR-J4-DU30KA4 MR-J4-DU30KA4-RJ MR-J4-DU30KB4 MR-J4-DU30KB4-RJ MR-J4-DU30KB4-RJ020
HG-JR37K1M4		MR-J4-DU37KA4 MR-J4-DU37KA4-RJ MR-J4-DU37KB4 MR-J4-DU37KB4-RJ MR-J4-DU37KB4-RJ020
HG-JR45K1M4		MR-J4-DU45KA4 MR-J4-DU45KA4-RJ MR-J4-DU45KB4 MR-J4-DU45KB4-RJ MR-J4-DU45KB4-RJ020
HG-JR55K1M4		MR-J4-DU55KA4 MR-J4-DU55KA4-RJ MR-J4-DU55KB4 MR-J4-DU55KB4-RJ MR-J4-DU55KB4-RJ020

(c) 1000 r/min series

Servo motor	Servo amplifier	Drive unit
HG-JR6014	MR-J4-700A4 MR-J4-700A4-RJ MR-J4-700B4 MR-J4-700B4-RJ MR-J4-700B4-RJ010 MR-J4-700B4-RJ020 MR-J4-700GF4 MR-J4-700GF4-RJ	
HG-JR8014	MR-J4-11KA4 MR-J4-11KA4-RJ MR-J4-11KB4 MR-J4-11KB4-RJ MR-J4-11KB4-RJ010 MR-J4-11KB4-RJ020 MR-J4-11KGF4 MR-J4-11KGF4-RJ	
HG-JR12K14		
HG-JR15K14	MR-J4-15KA4 MR-J4-15KA4-RJ MR-J4-15KB4 MR-J4-15KB4-RJ MR-J4-15KB4-RJ010 MR-J4-15KB4-RJ020 MR-J4-15KGF4 MR-J4-15KGF4-RJ	
HG-JR20K14	MR-J4-22KA4 MR-J4-22KA4-RJ MR-J4-22KB4 MR-J4-22KB4-RJ MR-J4-22KB4-RJ010 MR-J4-22KB4-RJ020 MR-J4-22KGF4 MR-J4-22KGF4-RJ	
HG-JR25K14		
HG-JR30K14		MR-J4-DU30KA4 MR-J4-DU30KA4-RJ MR-J4-DU30KB4 MR-J4-DU30KB4-RJ MR-J4-DU30KB4-RJ020
HG-JR37K14		MR-J4-DU37KA4 MR-J4-DU37KA4-RJ MR-J4-DU37KB4 MR-J4-DU37KB4-RJ MR-J4-DU37KB4-RJ020

8.3 Standard specifications

8.3.1 Standard specifications list

Item \ Servo motor			HG-JR 3000 r/min series (Compatible with 3-phase 200 V AC, low inertia/medium capacity)								
			53(B)	73(B)	103(B)	153(B)	203(B)	353(B)	503(B)	703(B)	903(B)
Power supply capacity			Refer to "Power supply equipment capacity and generated loss of servo amplifiers" in Servo Amplifier Instruction Manual.								
Continuous running duty (Note 1)	Rated output (Note 8) [kW]		0.5	0.75	1.0	1.5	2.0	3.3 (3.5)	5.0	7.0	9.0
	Rated torque (Note 8) [N•m]		1.6	2.4	3.2	4.8	6.4	10.5 (11.1)	15.9	22.3	28.6
Maximum torque (Note 8) [N•m]			4.8 (6.4)	7.2 (9.6)	9.6 (12.7)	14.3 (19.1)	19.1 (25.5)	32.0 (44.6)	47.7 (63.7)	66.8	85.8
Rated speed (Note 1) [r/min]			3000								
Maximum speed [r/min]			6000							5000	
Instantaneous permissible speed [r/min]			6900							5750	
Power rate at continuous rated torque	Standard [kW/s]		16.7	27.3	38.2	60.2	82.4	83.5	133	115	147
	With an electromagnetic brake [kW/s]		12.5	22.0	32.2	53.1	74.8	71.6	119	93.9	125
Rated current (Note 8) [A]			3.0	5.6	5.6	11	11	17 (18)	27	34	41
Maximum current (Note 8) [A]			9.0 (12)	17 (23)	17 (23)	32 (43)	32 (43)	51 (71)	81 (108)	103	134
Moment of inertia J	Standard [× 10^{-4} kg•m^2]		1.52	2.09	2.65	3.79	4.92	13.2	19.0	43.3	55.8
	With an electromagnetic brake [× 10^{-4} kg•m^2]		2.02	2.59	3.15	4.29	5.42	15.4	21.2	52.9	65.4
Recommended load to motor inertia ratio (Note 2)			10 times or less								
Speed/position detector			22-bit encoder common to absolute position/incremental (resolution per servo motor revolution: 4194304 pulses/rev)								
Oil seal			With								
Insulation class			155 (F)								
Structure			Totally-enclosed, natural-cooling (IP rating: IP67 (Note 3))								
Environment (Note 4)	Ambient temperature	Operation	0 ˚C to 40 ˚C (non-freezing)								
		Storage	-15 ˚C to 70 ˚C (non-freezing)								
	Ambient humidity	Operation	80 %RH or less (non-condensing)								
		Storage	90 %RH or less (non-condensing)								
	Ambience		Indoors (no direct sunlight), free from corrosive gas, flammable gas, oil mist, dust, and dirt								
	Altitude		2000 m or less above sea level (Note 9)								
	Vibration resistance (Note 5)		X, Y: 24.5 m/s^2							X: 24.5 m/s^2 Y: 29.4 m/s^2	
Vibration rank (Note 6)			V10								
Permissible load for the shaft (Note 7)	L [mm]		40					55		79	
	Radial [N]		323					980		2450	
	Thrust [N]		284					490		980	
Mass	Standard [kg]		3.0	3.7	4.5	5.9	7.5	13	18	29	36
	With an electromagnetic brake [kg]		4.4	5.1	5.9	7.3	8.9	15	20	35	42

Item \ Servo motor			HG-JR 1500 r/min series (Compatible with 3-phase 200 V AC, low inertia/large capacity)					
			701M(B)	11K1M(B)	15K1M(B)	22K1M	30K1M	37K1M
Power supply capacity			Refer to "Power supply equipment capacity and generated loss of servo amplifiers" in Servo Amplifier Instruction Manual.					
Continuous running duty (Note 1)	Rated output [kW]		7.0	11	15	22	30	37
	Rated torque [N•m]		44.6	70.0	95.5	140	191	236
Maximum torque [N•m]			134	210	286	420	573	707
Rated speed (Note 1) [r/min]			1500					
Maximum speed [r/min]			3000			2500		
Instantaneous permissible speed [r/min]			3450			2875		
Power rate at continuous rated torque	Standard [kW/s]		113	223	289	401	582	726
	With an electromagnetic brake [kW/s]		101	204	271			
Rated current [A]			34	61	76	99	139	151
Maximum current [A]			111	200	246	315	479	561
Moment of inertia J	Standard [× 10^{-4} kg•m^2]		176	220	315	489	627	764
	With an electromagnetic brake [× 10^{-4} kg•m^2]		196	240	336			
Recommended load to motor inertia ratio (Note 2)			10 times or less					
Speed/position detector			22-bit encoder common to absolute position/incremental (resolution per servo motor revolution: 4194304 pulses/rev)					
Oil seal			With					
Insulation class			155 (F)					
Structure			Totally-enclosed, natural-cooling (IP rating: IP67 (Note 3))			Totally-enclosed, force-cooled (IP rating: IP44 (Note 3))		
Environment (Note 4)	Ambient temperature	Operation	0 °C to 40 °C (non-freezing)					
		Storage	-15 °C to 70 °C (non-freezing)					
	Ambient humidity	Operation	80 %RH or less (non-condensing)					
		Storage	90 %RH or less (non-condensing)					
	Ambience		Indoors (no direct sunlight), free from corrosive gas, flammable gas, oil mist, dust, and dirt					
	Altitude		2000 m or less above sea level (Note 9)					
	Vibration resistance (Note 5)		X, Y: 24.5 m/s^2					
Vibration rank (Note 6)			V10					
Permissible load for the shaft (Note 7)	L [mm]		85	116		140		
	Radial [N]		2450	2940		3234		
	Thrust [N]		980			1470		
Mass	Standard [kg]		53	62	86	120	145	165
	With an electromagnetic brake [kg]		65	74	97			
Cooling fan	Power supply	Voltage/ Frequency				3-phase 200 V AC to 240 V AC 50 Hz/60 Hz		
		Power consumption [W]				65 (50 Hz)/85 (60 Hz)		
	Rated current [A]					0.20 (50 Hz)/0.22 (60 Hz)		

Item \ Servo motor			HG-JR 1000 r/min series (Compatible with 3-phase 200 V AC, low inertia/large capacity)							
			601(B)	801(B)	12K1(B)	15K1	20K1	25K1	30K1	37K1
Power supply capacity			Refer to "Power supply equipment capacity and generated loss of servo amplifiers" in Servo Amplifier Instruction Manual.							
Continuous running duty (Note 1)	Rated output [kW]		6.0	8.0	12	15	20	25	30	37
	Rated torque [N•m]		57.3	76.4	115	143	191	239	286	353
Maximum torque [N•m]			172	229	345	429	573	717	858	1059
Rated speed (Note 1) [r/min]			1000							
Maximum speed [r/min]			2000			1500				
Instantaneous permissible speed [r/min]			2300			1725				
Power rate at continuous rated torque	Standard [kW/s]		187	265	420	418	582	748	594	761
	With an electromagnetic brake [kW/s]		167	243	394					
Rated current [A]			31	47	60	67	94	95	121	152
Maximum current [A]			108	165	208	231	318	313	399	495
Moment of inertia J	Standard [× 10^{-4} kg•m^2]		176	220	315	489	627	764	1377	1637
	With an electromagnetic brake [× 10^{-4} kg•m^2]		196	240	336					
Recommended load to motor inertia ratio (Note 2)			10 times or less							
Speed/position detector			22-bit encoder common to absolute position/incremental (resolution per servo motor revolution: 4194304 pulses/rev)							
Oil seal			With							
Insulation class			155 (F)							
Structure			Totally-enclosed, natural-cooling (IP rating: IP67 (Note 3))			Totally-enclosed, force-cooled (IP rating: IP44 (Note 3))				
Environment (Note 4)	Ambient temperature	Operation	0 °C to 40 °C (non-freezing)							
		Storage	-15 °C to 70 °C (non-freezing)							
	Ambient humidity	Operation	80 %RH or less (non-condensing)							
		Storage	90 %RH or less (non-condensing)							
	Ambience		Indoors (no direct sunlight), free from corrosive gas, flammable gas, oil mist, dust, and dirt							
	Altitude		2000 m or less above sea level (Note 9)							
	Vibration resistance (Note 5)		X, Y: 24.5 m/s^2						X, Y: 9.8 m/s^2	
Vibration rank (Note 6)			V10							
Permissible load for the shaft (Note 7)	L [mm]		85	116		140			140	
	Radial [N]		2450	2940		3234			4900	
	Thrust [N]		980			1470			1960	
Mass	Standard [kg]		53	62	86	120	145	165	215	240
	With an electromagnetic brake [kg]		65	74	97					
Cooling fan	Power supply	Voltage/ Frequency				3-phase 200 V AC to 240 V AC, 50 Hz/60 Hz				
		Power consumption [W]				65 (50 Hz)/85 (60 Hz)			120 (50 Hz)/ 175 (60 Hz)	
	Rated current [A]					0.20 (50 Hz)/0.22 (60 Hz)			0.39 (50 Hz)/ 0.52 (60 Hz)	

Item \ Servo motor			HG-JR 3000 r/min series (Compatible with 3-phase 400 V AC, low inertia/medium capacity)								
			534(B)	734(B)	1034(B)	1534(B)	2034(B)	3534(B)	5034(B)	7034(B)	9034(B)
Power supply capacity			Refer to "Power supply equipment capacity and generated loss of servo amplifiers" in Servo Amplifier Instruction Manual.								
Continuous running duty (Note 1)	Rated output (Note 8)	[kW]	0.5	0.75	1.0	1.5	2.0	3.3 (3.5)	5.0	7.0	9.0
	Rated torque (Note 8)	[N•m]	1.6	2.4	3.2	4.8	6.4	10.5 (11.1)	15.9	22.3	28.6
Maximum torque (Note 8)		[N•m]	4.8 (6.4)	7.2 (9.6)	9.6 (12.7)	14.3 (19.1)	19.1 (25.5)	32.0 (44.6)	47.7 (63.7)	66.8	85.8
Rated speed (Note 1)		[r/min]	3000								
Maximum speed		[r/min]	6000							5000	
Instantaneous permissible speed		[r/min]	6900							5750	
Power rate at continuous rated torque	Standard	[kW/s]	16.7	27.3	38.2	60.2	82.4	83.5	133	115	147
	With an electromagnetic brake	[kW/s]	12.5	22.0	32.2	53.1	74.8	71.6	119	93.9	125
Rated current (Note 8)		[A]	1.5	2.8	2.8	5.4	5.4	8.3 (8.8)	14	17	21
Maximum current (Note 8)		[A]	4.5 (6.0)	8.4 (12)	8.4 (12)	17 (22)	17 (22)	26 (36)	41 (54)	52	67
Moment of inertia J	Standard	[× 10^{-4} kg•m^2]	1.52	2.09	2.65	3.79	4.92	13.2	19.0	43.3	55.8
	With an electromagnetic brake	[× 10^{-4} kg•m^2]	2.02	2.59	3.15	4.29	5.42	15.4	21.2	52.9	65.4
Recommended load to motor inertia ratio (Note 2)			10 times or less								
Speed/position detector			22-bit encoder common to absolute position/incremental (resolution per servo motor revolution: 4194304 pulses/rev)								
Oil seal			With								
Insulation class			155 (F)								
Structure			Totally-enclosed, natural-cooling (IP rating: IP67 (Note 3))								
Environment (Note 4)	Ambient temperature	Operation	0 ˚C to 40 ˚C (non-freezing)								
		Storage	-15 ˚C to 70 ˚C (non-freezing)								
	Ambient humidity	Operation	80 %RH or less (non-condensing)								
		Storage	90 %RH or less (non-condensing)								
	Ambience		Indoors (no direct sunlight), free from corrosive gas, flammable gas, oil mist, dust, and dirt								
	Altitude		2000 m or less above sea level (Note 9)								
	Vibration resistance (Note 5)		X, Y: 24.5 m/s^2							X: 24.5 m/s^2 Y: 29.4 m/s^2	
Vibration rank (Note 6)			V10								
Permissible load for the shaft (Note 7)	L	[mm]	40					55		79	
	Radial	[N]	323					980		2450	
	Thrust	[N]	284					490		980	
Mass	Standard	[kg]	3.0	3.7	4.5	5.9	7.5	13	18	29	36
	With an electromagnetic brake	[kg]	4.4	5.1	5.9	7.3	8.9	15	20	35	42

Item \ Servo motor			HG-JR 1500 r/min series (Compatible with 3-phase 400 V AC, low inertia/large capacity)							
			701M4 (B)	11K1M4 (B)	15K1M4 (B)	22K1M4	30K1M4	37K1M4	45K1M4	55K1M4
Power supply capacity			Refer to "Power supply equipment capacity and generated loss of servo amplifiers" in Servo Amplifier Instruction Manual.							
Continuous running duty (Note 1)	Rated output	[kW]	7.0	11	15	22	30	37	45	55
	Rated torque	[N•m]	44.6	70.0	95.5	140	191	236	286	350
Maximum torque		[N•m]	134	210	286	420	573	707	859	1050
Rated speed (Note 1)		[r/min]	1500							
Maximum speed		[r/min]	3000			2500				
Instantaneous permissible speed		[r/min]	3450			2875				
Power rate at continuous rated torque	Standard	[kW/s]	113	223	289	401	582	726	596	749
	With an electromagnetic brake	[kW/s]	101	204	271					
Rated current		[A]	17	31	38	50	68	79	85	110
Maximum current		[A]	56	100	123	170	235	263	288	357
Moment of inertia J	Standard	[× 10^{-4} kg•m^2]	176	220	315	489	627	764	1377	1637
	With an electromagnetic brake	[× 10^{-4} kg•m^2]	196	240	336					
Recommended load to motor inertia ratio (Note 2)			10 times or less							
Speed/position detector			22-bit encoder common to absolute position/incremental (resolution per servo motor revolution: 4194304 pulses/rev)							
Oil seal			With							
Insulation class			155 (F)							
Structure			Totally-enclosed, natural-cooling (IP rating: IP67 (Note 3))			Totally-enclosed, force-cooling (IP rating: IP44 (Note 3))				
Environment (Note 4)	Ambient temperature	Operation	0 ˚C to 40 ˚C (non-freezing)							
		Storage	-15 ˚C to 70 ˚C (non-freezing)							
	Ambient humidity	Operation	80 %RH or less (non-condensing)							
		Storage	90 %RH or less (non-condensing)							
	Ambience		Indoors (no direct sunlight), free from corrosive gas, flammable gas, oil mist, dust, and dirt							
	Altitude		2000 m or less above sea level (Note 9)							
	Vibration resistance (Note 5)		X, Y: 24.5 m/s^2						X, Y: 9.8 m/s^2	
Vibration rank (Note 6)			V10							
Permissible load for the shaft (Note 7)	L	[mm]	85	116		140			140	
	Radial	[N]	2450	2940		3234			4900	
	Thrust	[N]	980			1470			1960	
Mass	Standard	[kg]	53	62	86	120	145	165	215	240
	With an electromagnetic brake	[kg]	65	74	97					
Cooling fan	Power supply	Voltage/ Frequency				3-phase 380 V AC to 480 V AC 50 Hz/60 Hz			3-phase 380 V AC to 460 V AC 50 Hz/60 Hz	
		Power consumption [W]				65 (50 Hz)/85 (60 Hz)			110 (50 Hz)/ 150 (60 Hz)	
	Rated current	[A]				0.12 (50 Hz)/0.14 (60 Hz)			0.20 (50 Hz)/ 0.22 (60 Hz)	

Item \ Servo motor			HG-JR 1000 r/min series (Compatible with 3-phase 400 V AC, low inertia/large capacity)							
			6014(B)	8014(B)	12K14(B)	15K14	20K14	25K14	30K14	37K14
Power supply capacity			Refer to "Power supply equipment capacity and generated loss of servo amplifiers" in Servo Amplifier Instruction Manual.							
Continuous running duty (Note 1)	Rated output [kW]		6.0	8.0	12	15	20	25	30	37
	Rated torque [N•m]		57.3	76.4	115	143	191	239	286	353
Maximum torque [N•m]			172	229	345	429	573	717	858	1059
Rated speed (Note 1) [r/min]			1000							
Maximum speed [r/min]			2000			1500				
Instantaneous permissible speed [r/min]			2300			1725				
Power rate at continuous rated torque	Standard [kW/s]		187	265	420	418	582	748	594	761
	With an electromagnetic brake [kW/s]		167	243	394					
Rated current [A]			16	23	30	33	47	48	60	76
Maximum current [A]			54	80	104	114	161	160	202	248
Moment of inertia J	Standard [× 10^{-4} kg•m^2]		176	220	315	489	627	764	1377	1637
	With an electromagnetic brake [× 10^{-4} kg•m^2]		196	240	336					
Recommended load to motor inertia ratio (Note 2)			10 times or less							
Speed/position detector			22-bit encoder common to absolute position/incremental (resolution per servo motor revolution: 4194304 pulses/rev)							
Oil seal			With							
Insulation class			155 (F)							
Structure			Totally-enclosed, natural-cooling (IP rating: IP67 (Note 3))			Totally-enclosed, force-cooling (IP rating: IP44 (Note 3))				
Environment (Note 4)	Ambient temperature	Operation	0 ˚C to 40 ˚C (non-freezing)							
		Storage	-15 ˚C to 70 ˚C (non-freezing)							
	Ambient humidity	Operation	80 %RH or less (non-condensing)							
		Storage	90 %RH or less (non-condensing)							
	Ambience		Indoors (no direct sunlight), free from corrosive gas, flammable gas, oil mist, dust, and dirt							
	Altitude		2000 m or less above sea level (Note 9)							
	Vibration resistance (Note 5)		X, Y: 24.5 m/s^2						X, Y: 9.8 m/s^2	
Vibration rank (Note 6)			V10							
Permissible load for the shaft (Note 7)	L [mm]		85	116		140			140	
	Radial [N]		2450	2940		3234			4900	
	Thrust [N]		980			1470			1960	
Mass	Standard [kg]		53	62	86	120	145	165	215	240
	With an electromagnetic brake [kg]		65	74	97					
Cooling fan	Power supply	Voltage/ Frequency				3-phase 380 V AC to 480 V AC 50 Hz/60 Hz			3-phase 380 V AC to 460 V AC 50 Hz/60 Hz	
		Power consumption [W]				65 (50 Hz)/85 (60 Hz)			110 (50 Hz)/ 150 (60 Hz)	
	Rated current [A]					0.12 (50 Hz)/0.14 (60 Hz)			0.20 (50 Hz)/ 0.22 (60 Hz)	

Note 1. When the power supply voltage drops, the output and the rated speed cannot be guaranteed.
2. If the load to motor inertia ratio exceeds the indicated value, contact your local sales office.
3. Except for the shaft-through portion. IP classifies the degrees of protection provided against the intrusion of solid objects and water in electrical enclosures.
4. In the environment where the servo motor is exposed to oil mist, oil, or water, the servo motor of the standard specifications may not be usable. Please contact your local sales office.
5. The following figure shows the vibration directions. The value is the one at the part that indicates the maximum value (normally the opposite to load-side bracket). When the servo motor stops, fretting is likely to occur at the bearing. Therefore, suppress the vibration to about half of the permissible value.

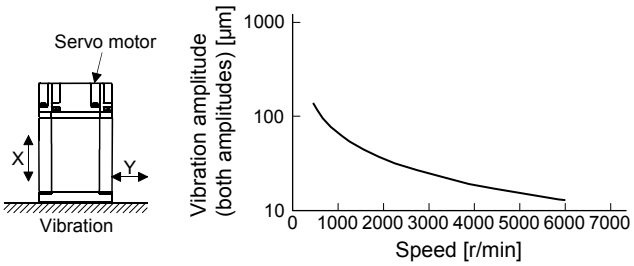

6. V10 indicates that the amplitude of a single servo motor is 10 μm or less. The following figure shows the servo motor mounting position for measurement and the measuring position.

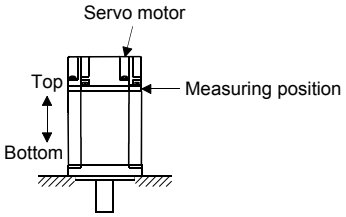

7. The following shows permissible load for the shaft. Do not subject the shaft to load greater than the value in the specifications list. The value assumes that the load is applied independently.

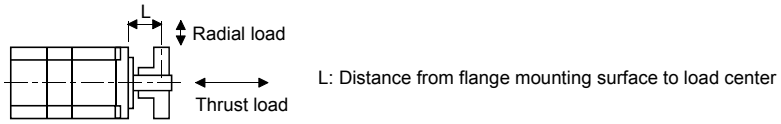

8. Values in parentheses are at the maximum torque of 400%. The maximum torque can be increased to 400% by changing the servo amplifier. Refer to section 8.2 for the combinations.
9. Follow the restrictions in section 2.10 when using the servo amplifiers at altitude exceeding 1000 m and up to 2000 m above sea level.

8.3.2 Torque characteristics

POINT

- For the system where the unbalanced torque occurs, such as a vertical axis system, the unbalanced torque of the machine should be kept at 70% or less of the rated torque.
- An HG-JR series servo motor cannot be used on the assumption that the maximum torque is 400% when you use it with the 1-phase 200 V AC input.
- When using an HG-JR103, HG-JR153, or HG-JR203 with the 1-phase 200 V AC input, contact your local sales office.

(1) 3-phase 200 V AC

When the power supply input of the servo amplifier is 3-phase 200 V AC or 1-phase 230 V AC, the torque characteristic is indicated by the heavy line. For the 1-phase 200 V AC power supply, part of the torque characteristic is indicated by the thin line. HG-JR53, HG-JR73, HG-JR103, HG-JR153, and HG-JR203 support 1-phase power supply input.

(a) 3000 r/min series

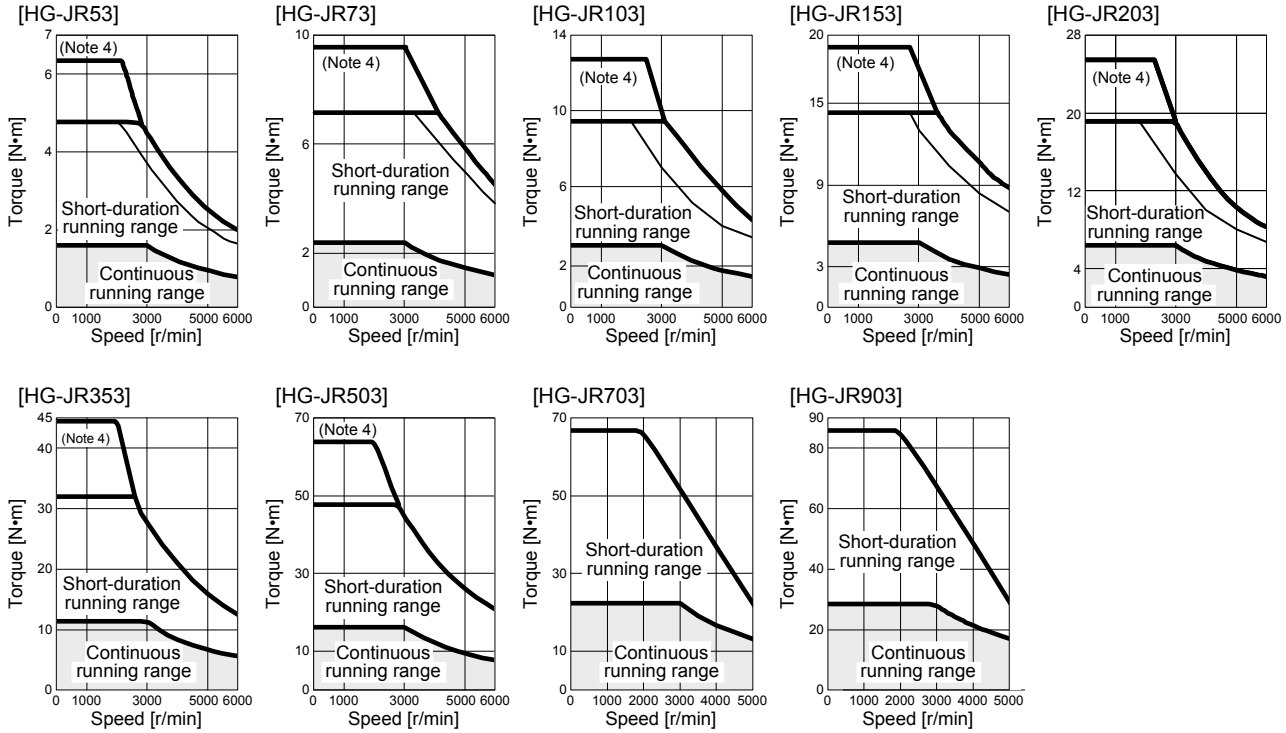

Note. Value at the maximum torque 400%. The maximum torque can be increased to 400% by changing the servo amplifier. Refer to section 8.2 for the combinations.

(b) 1500 r/min series

[HG-JR701M]

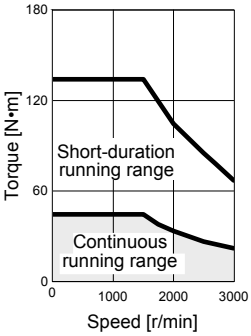

[HG-JR11K1M]

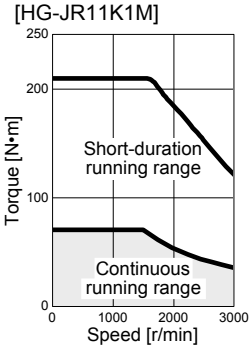

[HG-JR15K1M]

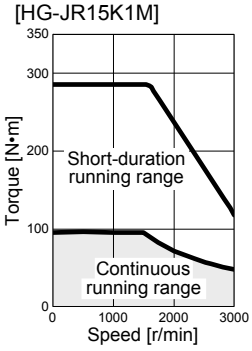

[HG-JR22K1M]

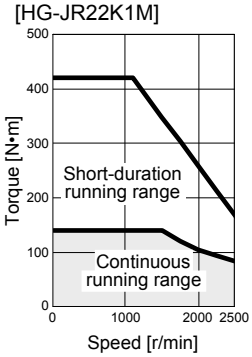

[HG-JR30K1M]

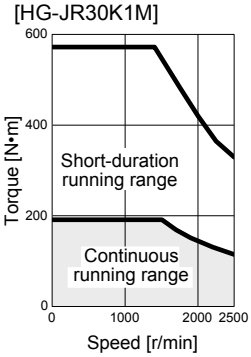

[HG-JR37K1M]

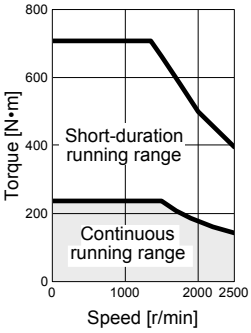

(c) 1000 r/min series

[HG-JR601]

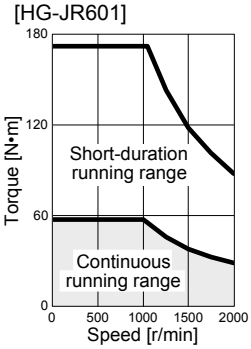

[HG-JR801]

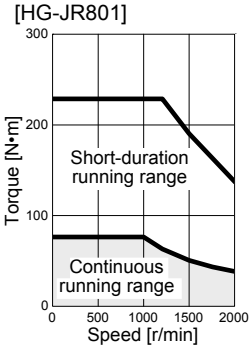

[HG-JR12K1]

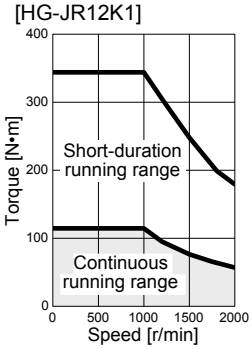

[HG-JR15K1]

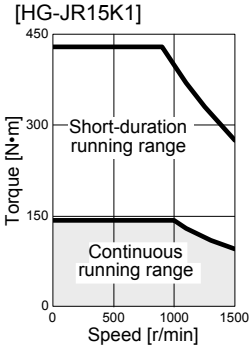

[HG-JR20K1]

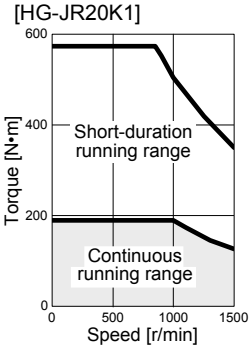

[HG-JR25K1]

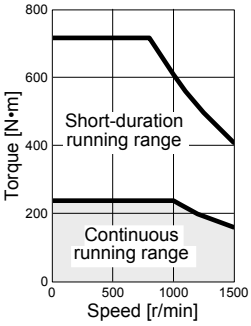

[HG-JR30K1]

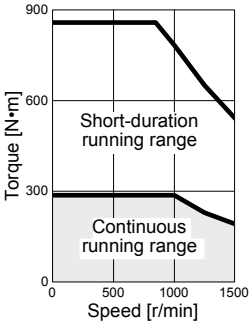

[HG-JR37K1]

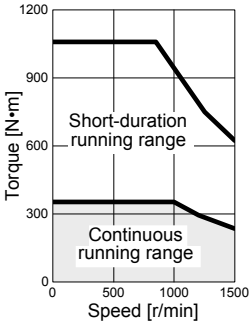

(2) 3-phase 400 V AC

When the power supply input of the servo amplifier is 3-phase 400 V AC, the torque characteristic is indicated by the heavy line. For the 3-phase 380 V AC power supply, part of the torque characteristic is indicated by the thin line.

(a) 3000 r/min series

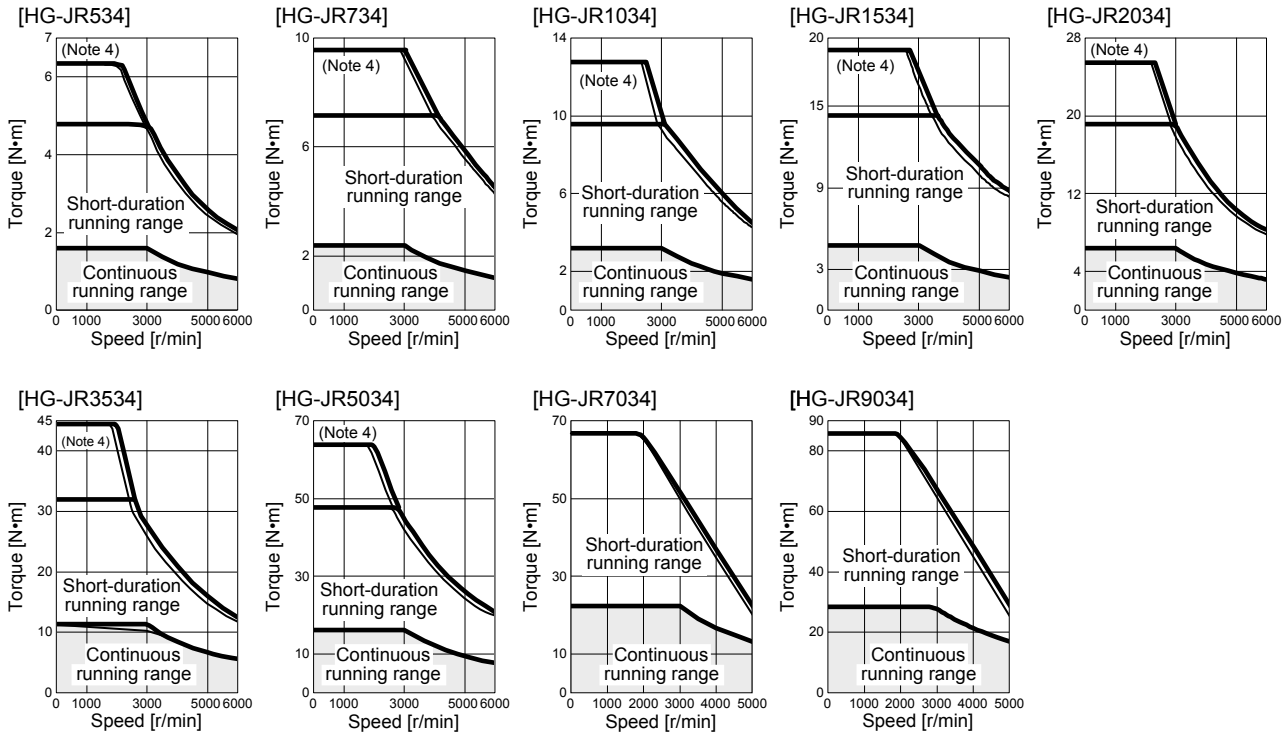

Note. Value at the maximum torque 400%. The maximum torque can be increased to 400% by changing the servo amplifier. Refer to section 8.2 for the combinations.

(b) 1500 r/min series

[HG-JR701M4]

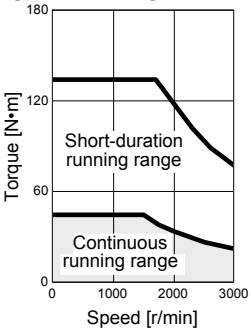

[HG-JR11K1M4]

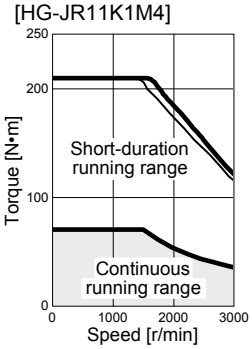

[HG-JR15K1M4]

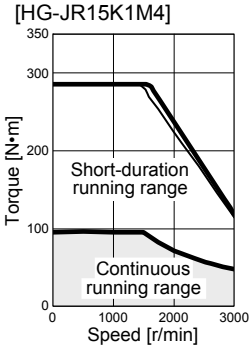

[HG-JR22K1M4]

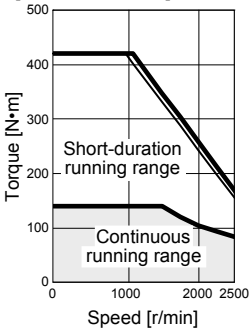

[HG-JR30K1M4]

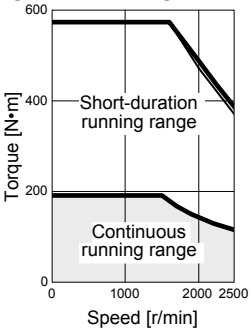

[HG-JR37K1M4]

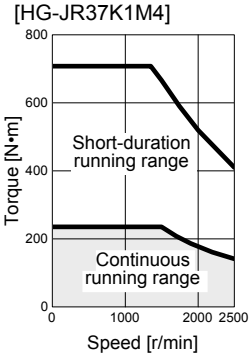

[HG-JR45K1M4]

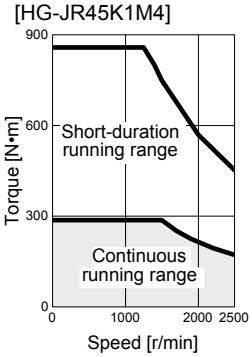

[HG-JR55K1M4]

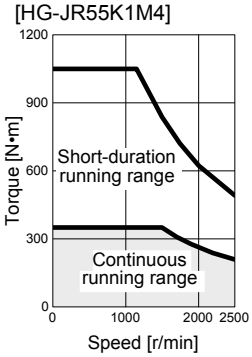

(c) 1000 r/min series

[HG-JR6014]

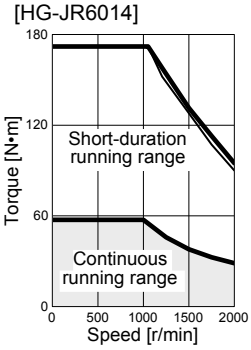

[HG-JR8014]

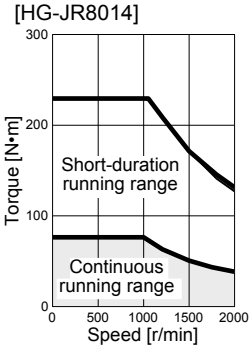

[HG-JR12K14]

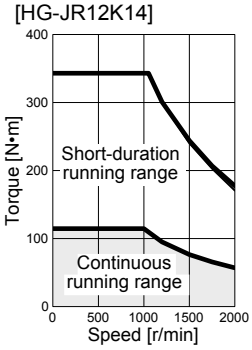

[HG-JR15K14]

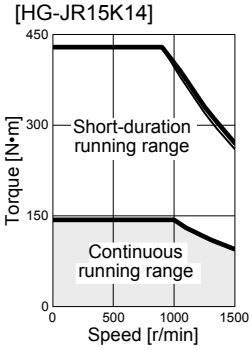

[HG-JR20K14]

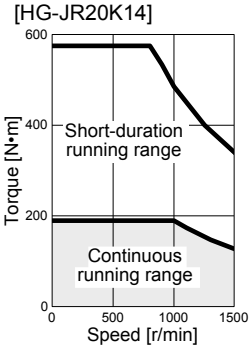

[HG-JR25K14]

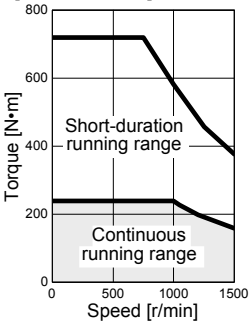

[HG-JR30K14]

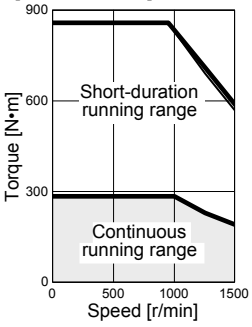

[HG-JR37K14]

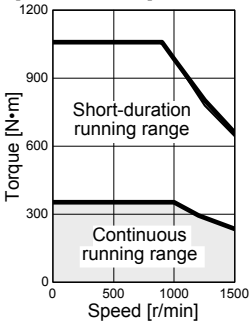

8.4 Electromagnetic brake characteristics

⚠CAUTION

- The electromagnetic brake is provided to prevent a drop at a power failure or servo alarm occurrence during vertical drive or to hold a shaft at a stop. Do not use it for normal braking (including braking at servo-lock).
- Before operating the servo motor, be sure to confirm that the electromagnetic brake operates properly.
- The operation time of the electromagnetic brake differs depending on the power supply circuit you use. Be sure to check the operation delay time with a real machine.

POINT

- The 1500 r/min series servo motor of 22 kW or more and 1000 r/min series servo motor of 15 kW or more with an electromagnetic brake are not available.

The characteristics of the electromagnetic brake provided for the servo motor with an electromagnetic brake are indicated below.

Item \ Servo motor		HG-JR series			
		53(4)B 73(4)B 103(4)B 153(4)B 203(4)B	353(4)B 503(4)B	703(4)B 903(4)B	601(4)B 801(4)B 12K1(4)B 701M(4)B 11K1M(4)B 15K1M(4)B
Type (Note 1)		Spring actuated type safety brake			
Rated voltage (Note 4)		24 V DC $^{0}_{-10\%}$			
Power consumption [W] at 20 °C		11.7	23	34	32
Coil resistance (Note 6) [Ω]		49	25	16.8	18.2
Inductance (Note 6) [H]		0.37	0.25	1.10	0.73
Brake static friction torque [N•m]		6.6	16	44	126
Release delay time (Note 2) [s]		0.09	0.12	0.1	0.5
Braking delay time (Note 2) [s]	DC off	0.03	0.03	0.03	0.2
Permissible braking work	Per braking [J]	64	400	4500	5000
	Per hour [J]	640	4000	45000	45200
Brake looseness at servo motor shaft (Note 5) [degrees]		0.01 to 0.8	0.01 to 0.6	0.2 to 0.6	0.01 to 0.6
Brake life (Note 3)	Number of brakings [times]	5000	5000	20000	20000
	Work per braking [J]	64	400	1000	400
Selection example of surge absorbers to be used (Note 7)	For the suppressed voltage 125 V	(Note 8) TND20V-680KB			
	For the suppressed voltage 350 V	(Note 8) TND10V-221KB			

Note
1. There is no manual release mechanism. When it is necessary to hand-turn the servo motor shaft for machine centering, etc., use a separate 24 V DC power supply to release the brake electrically.
2. The value for initial on gap at 20 °C.
3. The brake gap will increase as the brake lining wears, but the gap is not adjustable.
   The brake life indicated is the number of braking cycles after which adjustment will be required.
4. Always prepare a power supply exclusively used for the electromagnetic brake.
5. These are design values. These are not guaranteed values.
6. These are measured values. These are not guaranteed values.
7. Select the electromagnetic brake control relay properly, considering the characteristics of the electromagnetic brake and surge absorber. When you use a diode for a surge absorber, the electromagnetic braking time will be longer.
8. Manufactured by Nippon Chemi-Con Corporation.

8.5 Servo motors with special shafts

The servo motors with special shafts indicated by the symbol (K) in the table are available. K is the symbol attached to the servo motor model names.

Servo motor	Shaft shape
	Key shaft (without key)
HG-JR_(4)(B)K	K

Variable dimension table [Unit: mm]

Servo motor	Variable dimensions									Figure
	S	R	Q	W	QK	QL	U	r	Y	
HG-JR53(4)(B)K HG-JR73(4)(B)K HG-JR103(4)(B)K HG-JR153(4)(B)K HG-JR203(4)(B)K	16h6	40	30	$5^{0}_{-0.030}$	25	2	$3^{+0.1}_{0}$	2.5	M4 screw hole depth 15	A
HG-JR353(4)(B)K HG-JR503(4)(B)K	28h6	55	50	$8^{0}_{-0.036}$	36	5	$4^{+0.2}_{0}$	4	M8 screw hole depth 20	
HG-JR703(4)(B)K HG-JR903(4)(B)K	$35^{+0.010}_{0}$	79	75	$10^{0}_{-0.036}$	55	5	$5^{+0.2}_{0}$	5	M8 screw hole depth 20	
HG-JR601(4)(B)K HG-JR701M(4)(B)K	42h6	85	79	$12^{0}_{-0.040}$	70	5	$5^{+0.2}_{0}$	6	M8 screw hole depth 19.8	
HG-JR801(4)(B)K HG-JR12K1(4)(B)K HG-JR11K1M(4)(B)K HG-JR15K1M(4)(B)K	55m6	116	110	$16^{0}_{-0.040}$	90	5	$6^{+0.2}_{0}$	8	M10 screw hole depth 27	
HG-JR15K1(4)K HG-JR20K1(4)K HG-JR25K1(4)K HG-JR22K1M(4)K HG-JR30K1M(4)K HG-JR37K1M(4)K	65m6	140	130	$18^{0}_{-0.040}$	120	5	$7^{+0.2}_{0}$	9	M12 screw hole depth 25	
HG-JR30K1(4)K HG-JR37K1(4)K HG-JR45K1M4K HG-JR55K1M4K	80m6	140	140	$22^{0}_{-0.040}$	132	7	$9^{+0.2}_{0}$	11	M16 screw hole depth 30	B

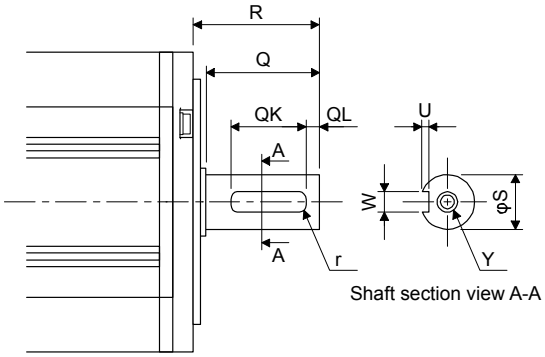

Figure A

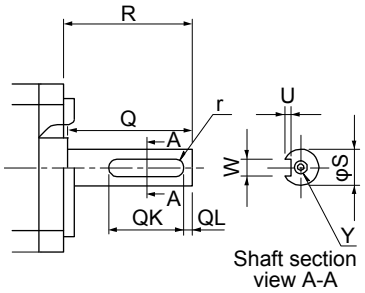

Figure B

Key shaft (without key)

8.6 Oil seal

The oil seal prevents the entry of oil into the servo motor.
Install the servo motor horizontally, and set the oil level in the gear box to be lower than the oil seal lip always.

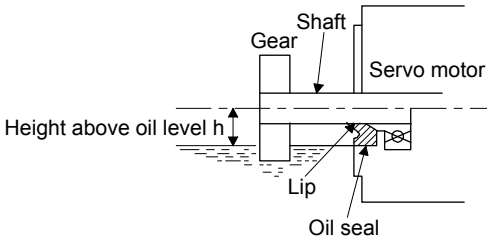

Servo motor	Oil level h [mm]
HG-JR53(4)(B) HG-JR73(4)(B) HG-JR103(4)(B) HG-JR153(4)(B) HG-JR203(4)(B)	18
HG-JR353(4)(B) HG-JR503(4)(B)	20
HG-JR703(4)(B) HG-JR903(4)(B) HG-JR601(4)(B) HG-JR801(4)(B) HG-JR12K1(4)(B) HG-JR701M(4)(B)	25
HG-JR11K1M(4)(B) HG-JR15K1M(4)(B)	40
HG-JR15K1(4) HG-JR20K1(4) HG-JR25K1(4) HG-JR22K1M(4) HG-JR30K1M(4) HG-JR37K1M(4)	50
HG-JR30K1(4) HG-JR37K1(4) HG-JR45K1M4 HG-JR55K1M4	55

8.7 Cooling fan

For the servo motor with a cooling fan, leave the following distance between the servo motor's suction face and the wall.

Servo motor	Distance L [mm]
HG-JR15K1(4) HG-JR20K1(4) HG-JR25K1(4) HG-JR30K1(4) HG-JR37K1(4) HG-JR22K1M(4) HG-JR30K1M(4) HG-JR37K1M(4) HG-JR45K1M4 HG-JR55K1M4	150

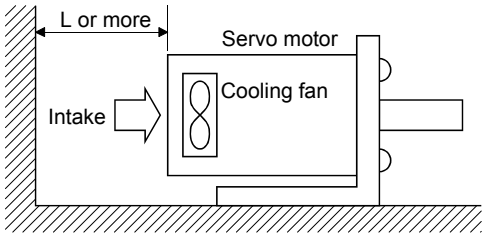

8.8 Dimensions

Moment of inertia on the table is the value calculated by converting the total value of moment of inertia for servo motor and electromagnetic brake with servo motor shaft.
The dimensions without tolerances are general tolerance.

8.8.1 Terminal box detail diagram

HG-JR22K1M(4) to HG-JR37K1M(4)/HG-JR45K1M4/HG-JR55K1M4/HG-JR15K1(4) to HG-JR37K1(4)

POINT
●The terminal box of the HG-JR22K1M(4) servo motor has been changed since September 2014. Refer to app. 9 for the terminal box detail diagram before change.

[Unit: mm]

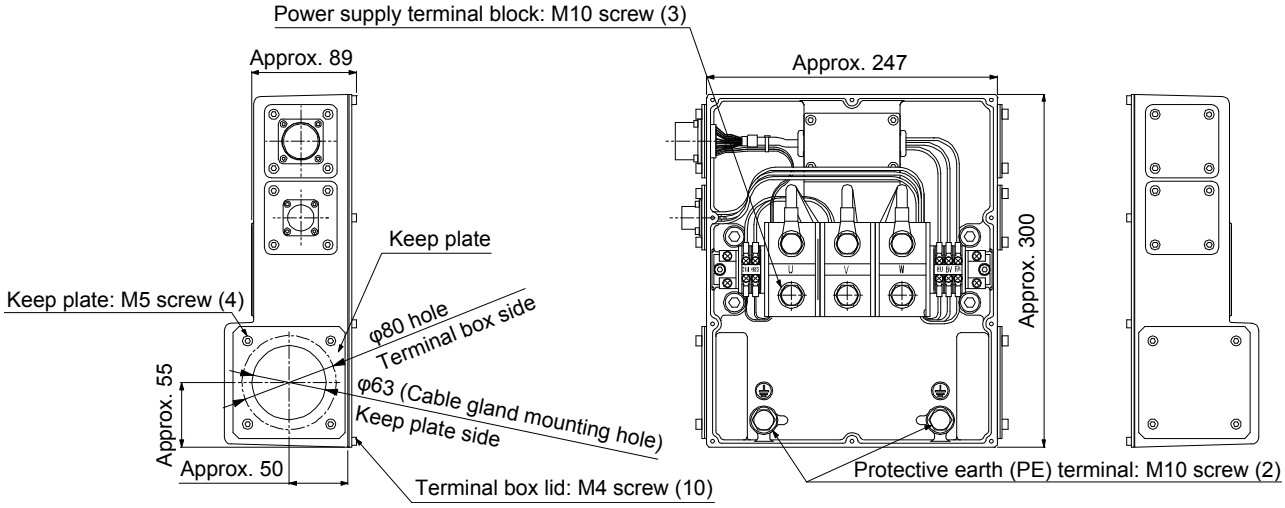

8.8.2 Standard (without an electromagnetic brake)

Model	Output [kW]	Moment of inertia J [× 10^{-4} kg•m^2]	Mass [kg]
HG-JR53	0.5	1.52	3.0
HG-JR534			

[Unit: mm]

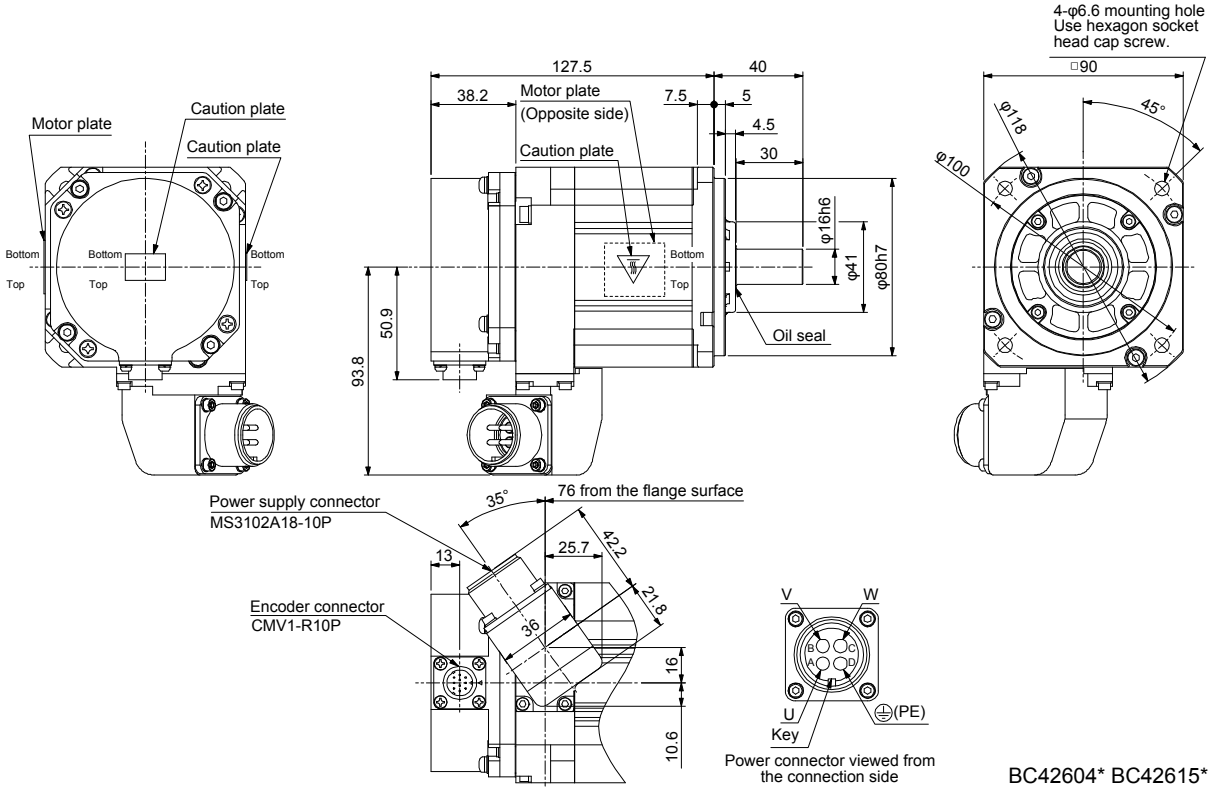

BC42604* BC42615*

Model	Output [kW]	Moment of inertia J [× 10^{-4} kg•m^2]	Mass [kg]
HG-JR73	0.75	2.09	3.7
HG-JR734			

[Unit: mm]

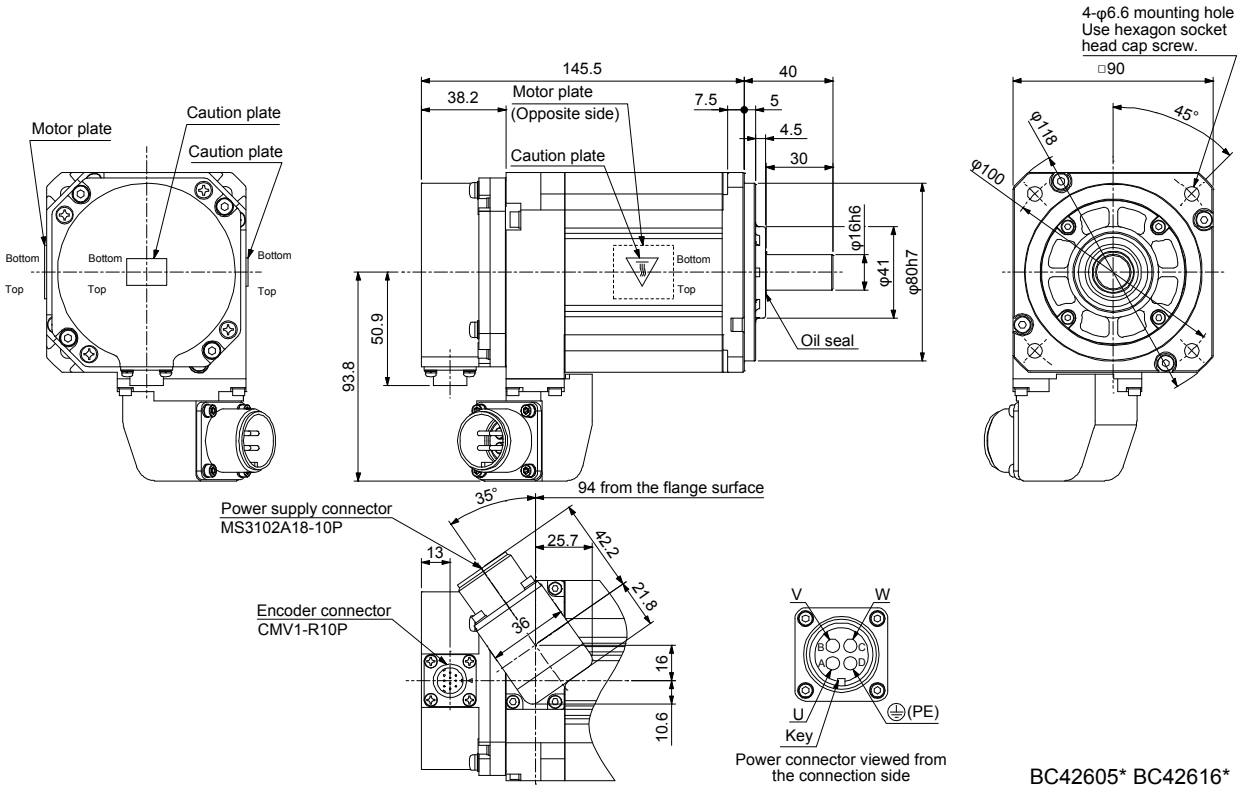

BC42605* BC42616*

Model	Output [kW]	Moment of inertia J [× 10^{-4} kg•m^2]	Mass [kg]
HG-JR103	1.0	2.65	4.5
HG-JR1034			

[Unit: mm]

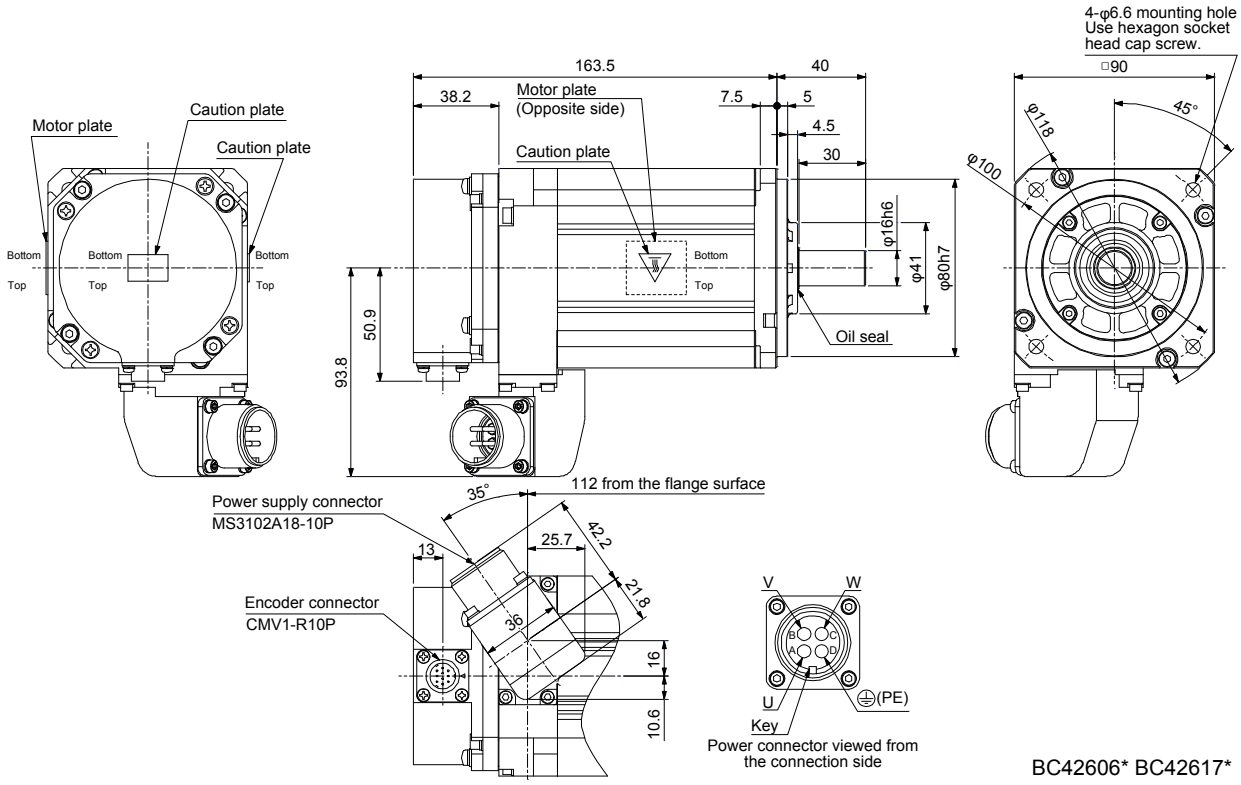

BC42606* BC42617*

Model	Output [kW]	Moment of inertia J [× 10^{-4} kg•m^2]	Mass [kg]
HG-JR153	1.5	3.79	5.9
HG-JR1534			

[Unit: mm]

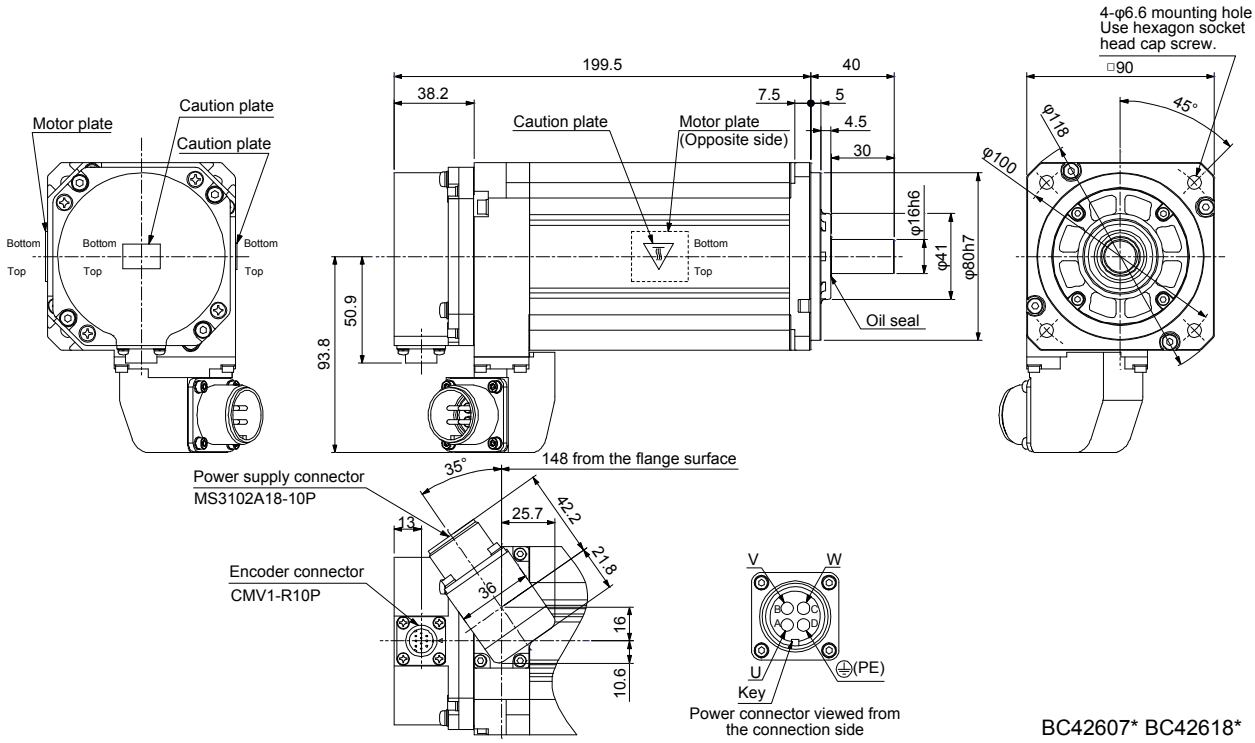

BC42607* BC42618*

Model	Output [kW]	Moment of inertia J [× 10^{-4} kg•m^2]	Mass [kg]
HG-JR203	2.0	4.92	7.5
HG-JR2034			

[Unit: mm]

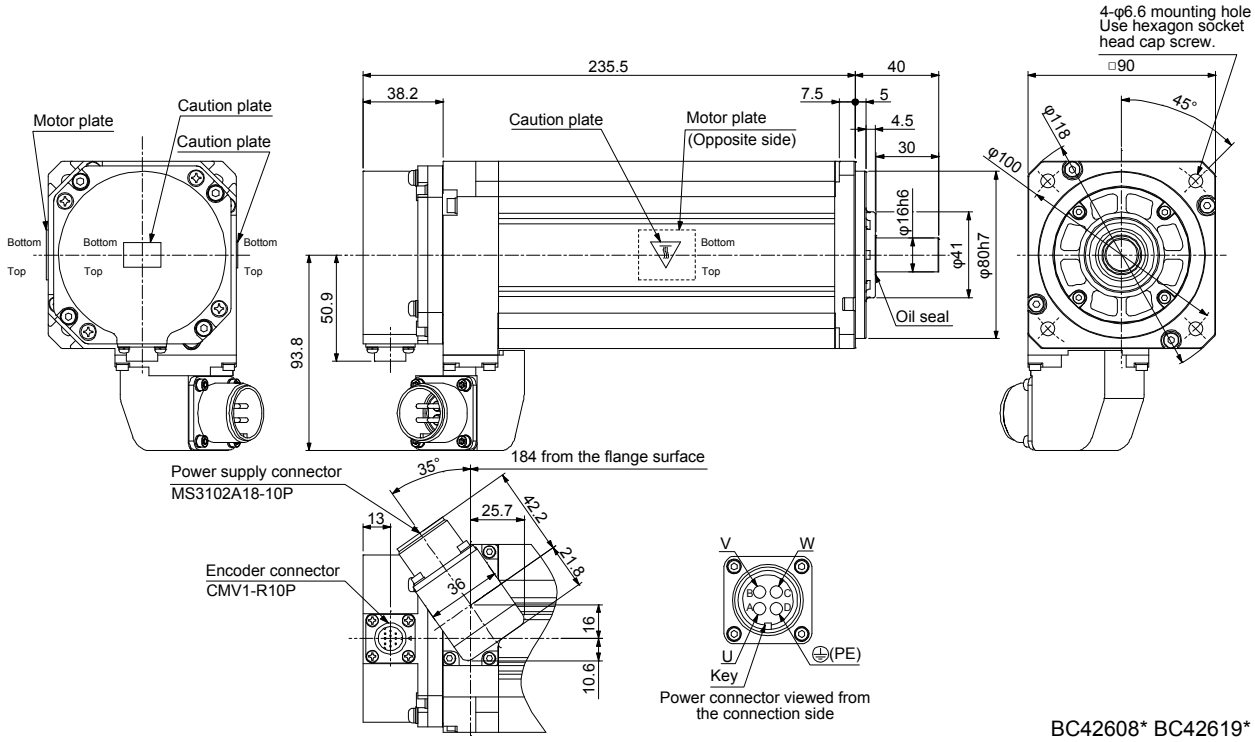

BC42608* BC42619*

Model	Output [kW]	Moment of inertia J [× 10^{-4} kg•m^2]	Mass [kg]
HG-JR353	3.5	13.2	13

[Unit: mm]

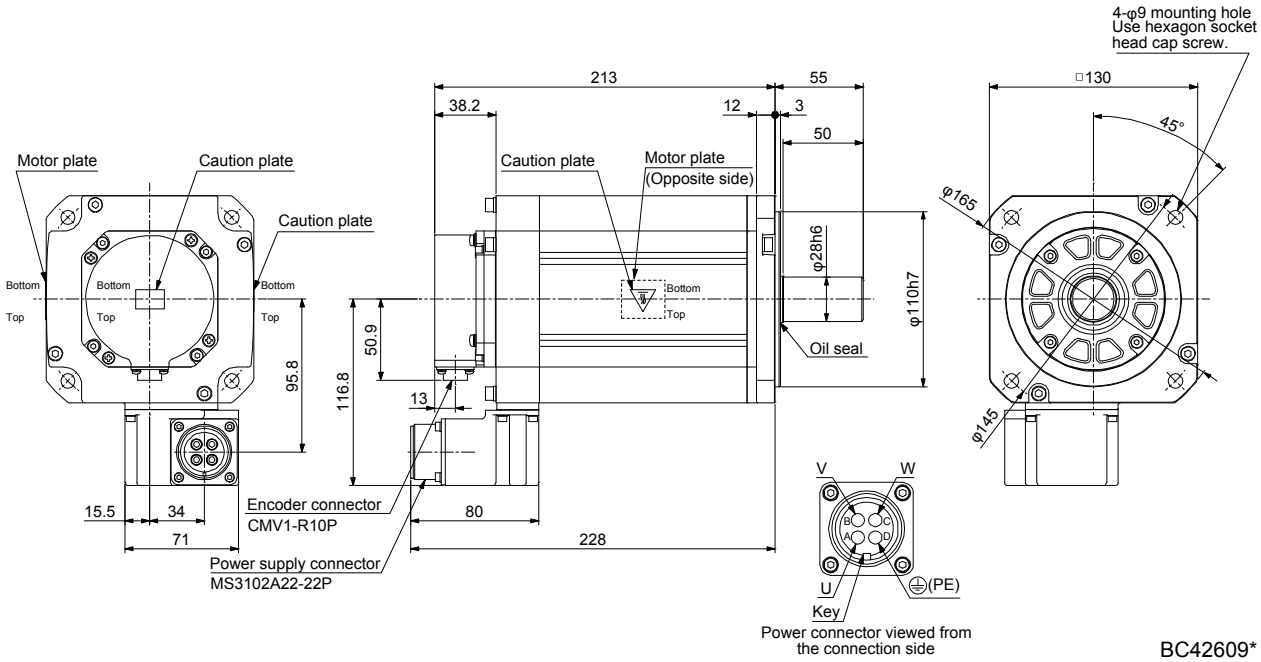

BC42609*

Model	Output [kW]	Moment of inertia J [× 10^{-4} kg•m^2]	Mass [kg]
HG-JR3534	3.5	13.2	13

[Unit: mm]

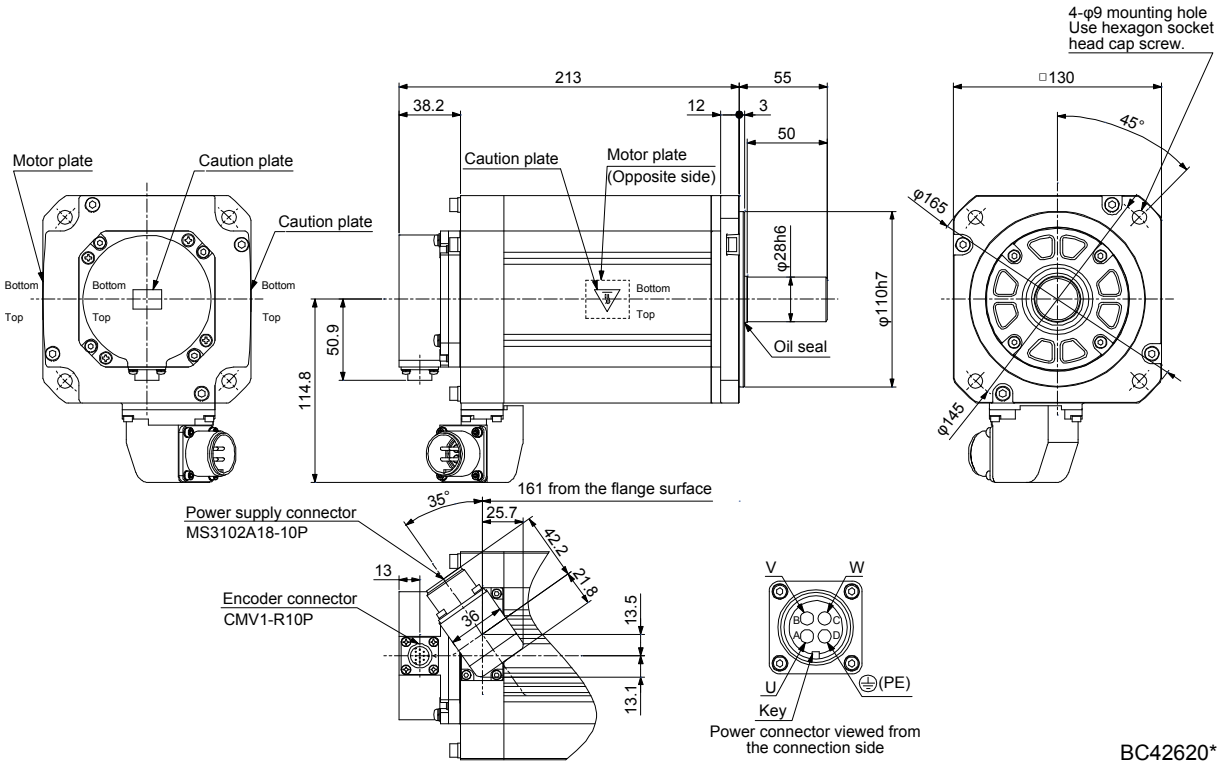

BC42620*

Model	Output [kW]	Moment of inertia J [× 10^{-4} kg•m^2]	Mass [kg]
HG-JR503	5.0	19.0	18

[Unit: mm]

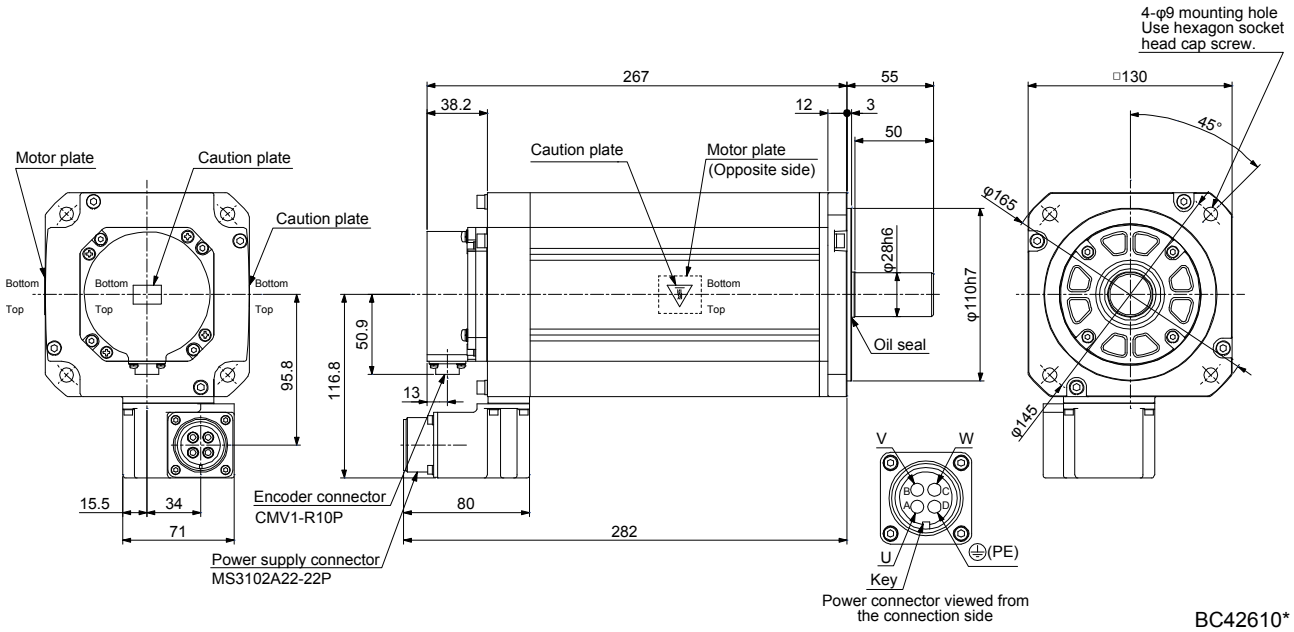

BC42610*

Model	Output [kW]	Moment of inertia J [× 10^{-4} kg•m^2]	Mass [kg]
HG-JR5034	5.0	19.0	18

[Unit: mm]

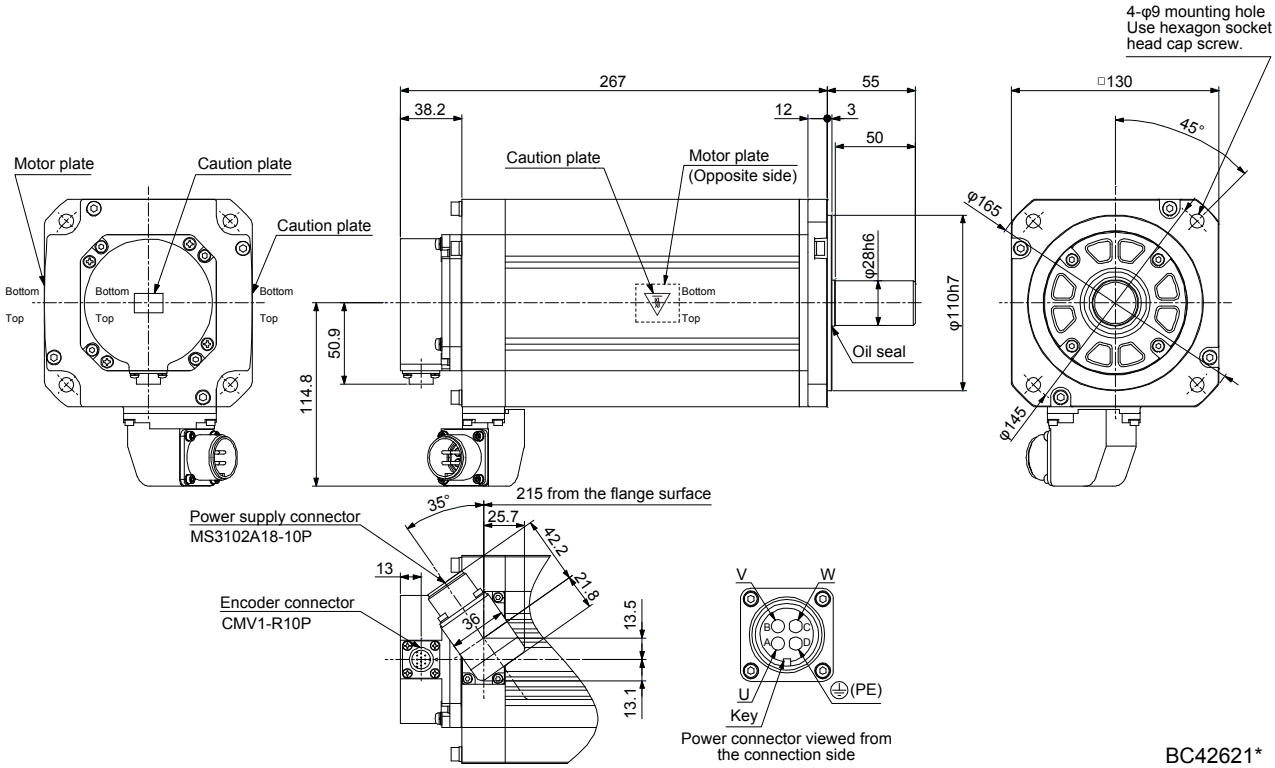

BC42621*

Model	Output [kW]	Moment of inertia J [× 10^{-4} kg•m^2]	Mass [kg]
HG-JR703	7.0	43.3	29
HG-JR7034			

[Unit: mm]

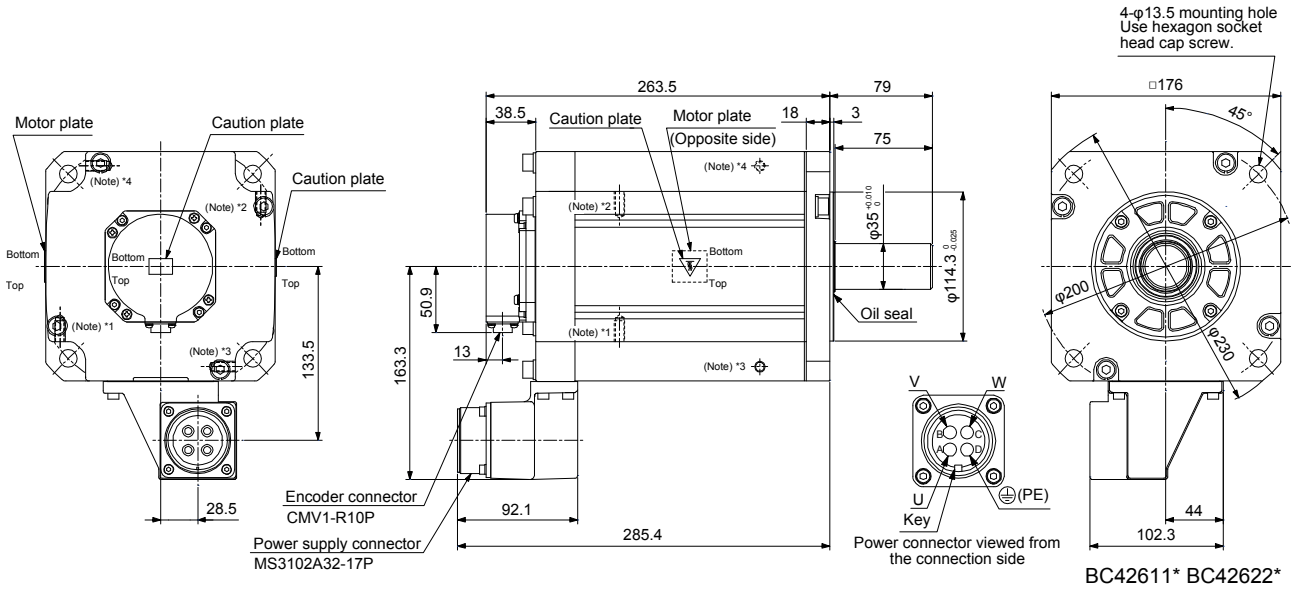

BC42611* BC42622*

Note. *1, *2, *3, and *4 are screw hole for eyebolt (M8).

Model	Output [kW]	Moment of inertia J [× 10^{-4} kg•m^2]	Mass [kg]
HG-JR903	9.0	55.8	36
HG-JR9034			

[Unit: mm]

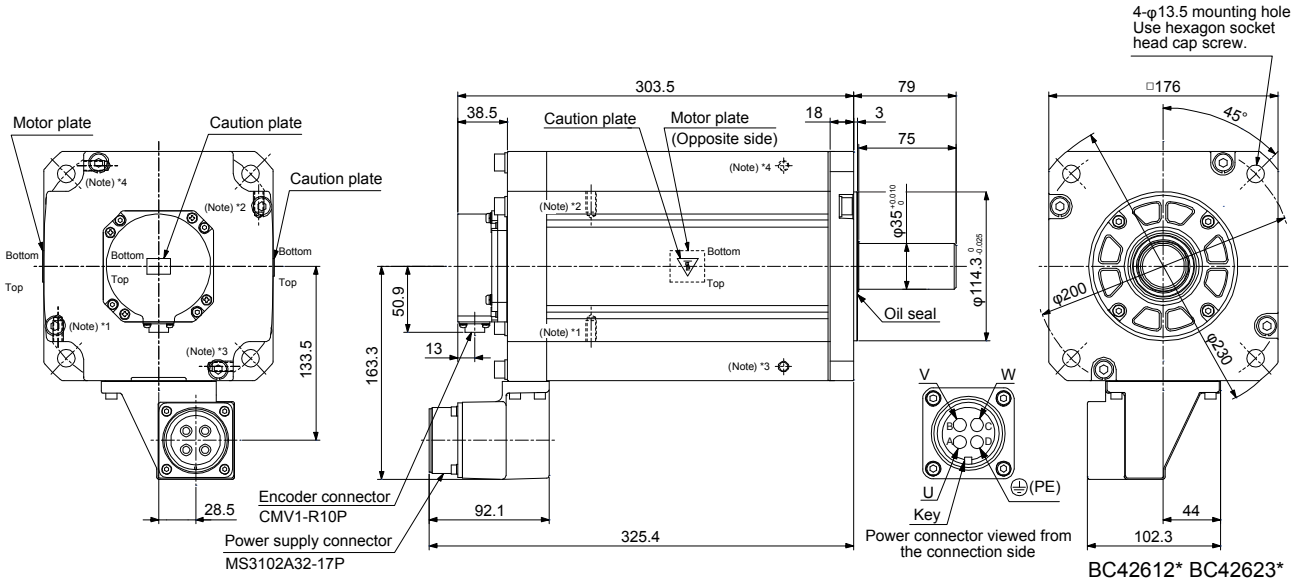

BC42612* BC42623*

Note. *1, *2, *3, and *4 are screw hole for eyebolt (M8).

Model	Output [kW]	Moment of inertia J [× 10^{-4} kg•m^2]	Mass [kg]
HG-JR601	6	176	53
HG-JR6014			
HG-JR701M	7		
HG-JR701M4			

[Unit: mm]

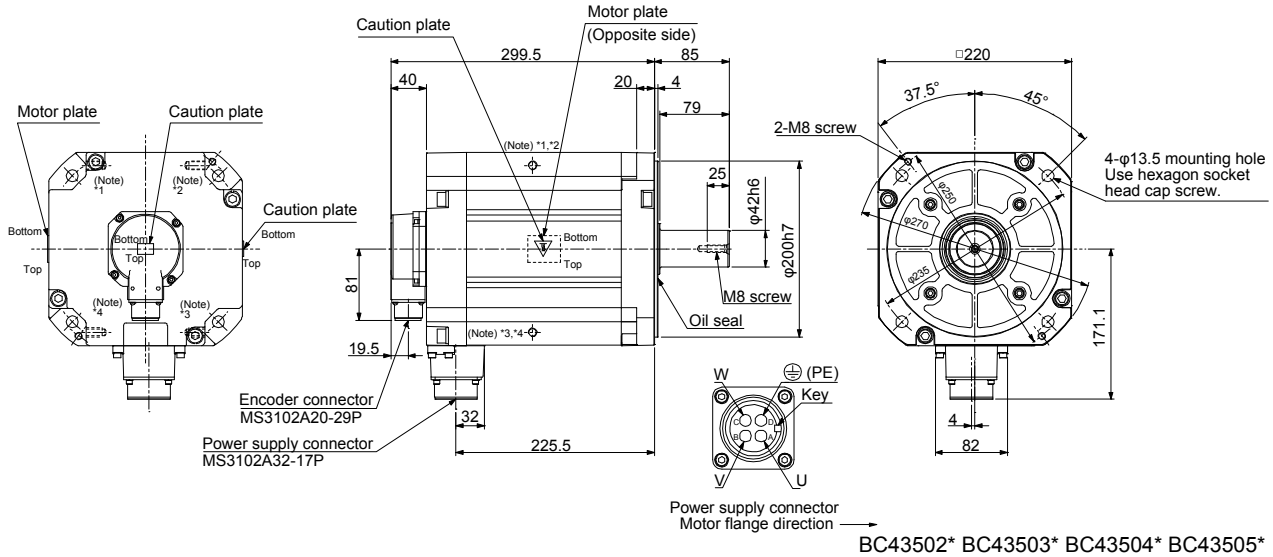

BC43502* BC43503* BC43504* BC43505*

Note. *1, *2, *3, and *4 are screw hole for eyebolt (M10).

Model	Output [kW]	Moment of inertia J [× 10^{-4} kg•m^2]	Mass [kg]
HG-JR801	8	220	62
HG-JR8014			
HG-JR11K1M	11		
HG-JR11K1M4			

[Unit: mm]

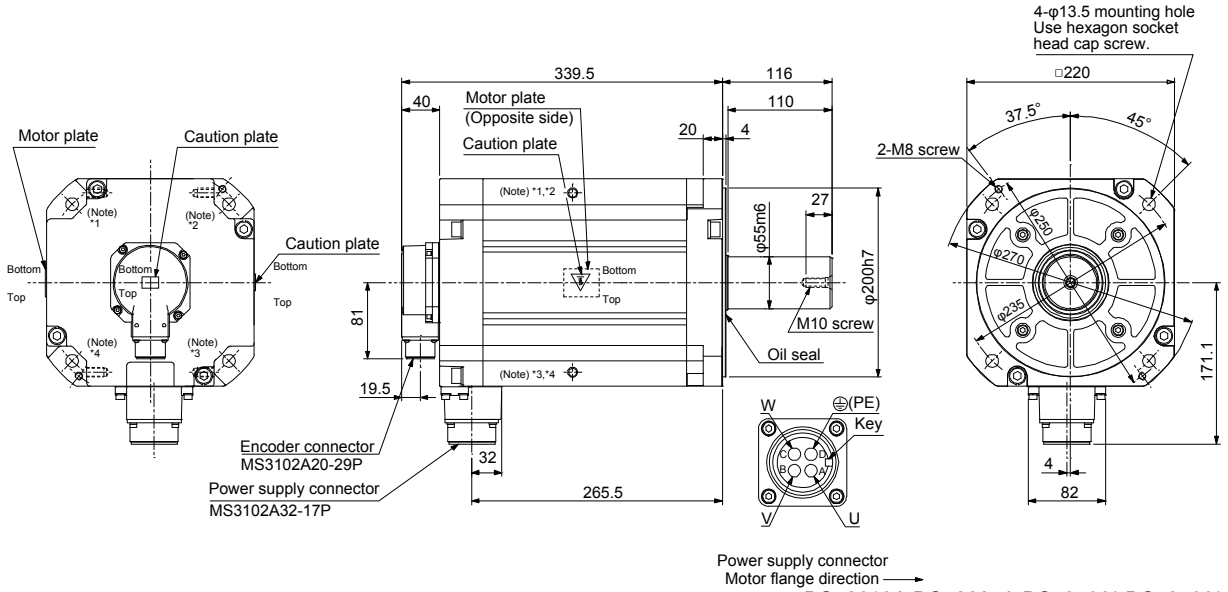

BC42613A BC42624A BC43498* BC43499*

Note. *1, *2, *3, and *4 are screw hole for eyebolt (M10).

Model	Output [kW]	Moment of inertia J [× 10^{-4} kg•m^2]	Mass [kg]
HG-JR12K1	12	315	86
HG-JR12K14			
HG-JR15K1M	15		
HG-JR15K1M4			

[Unit: mm]

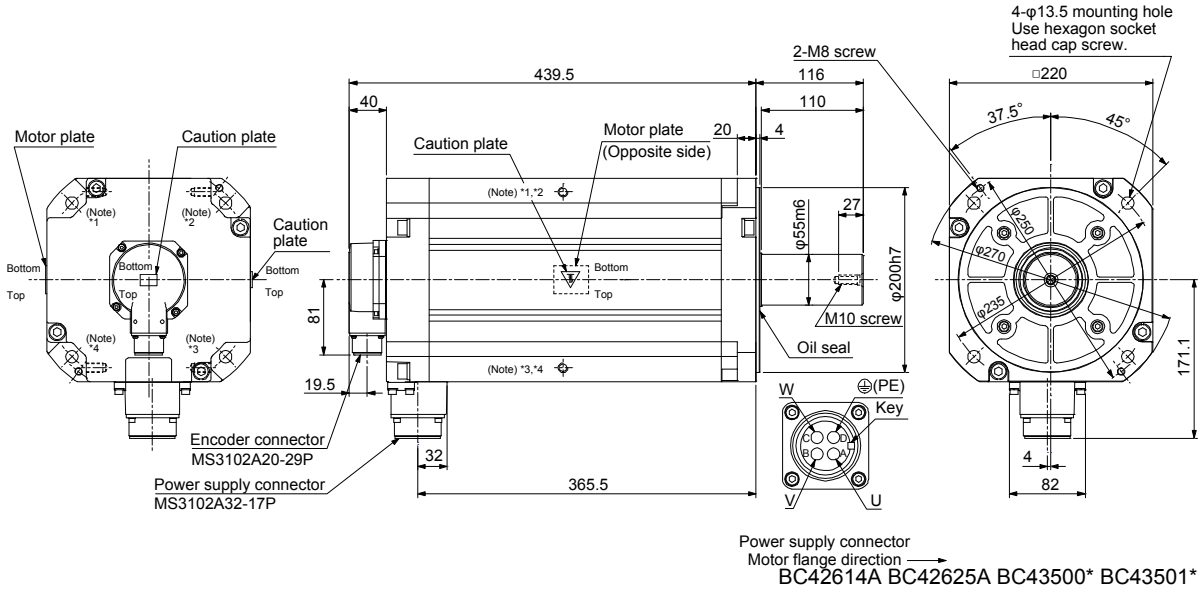

BC42614A BC42625A BC43500* BC43501*

Note. *1, *2, *3, and *4 are screw hole for eyebolt (M10).

Model	Output [kW]	Moment of inertia J [× 10^{-4} kg•m^2]	Mass [kg]
HG-JR15K1	15	489	120
HG-JR15K14			
HG-JR22K1M	22		
HG-JR22K1M4			

POINT

●The appearance of the HG-JR22K1M(4) servo motor has been changed since September 2014. Refer to app. 9 for the dimensions before change.

[Unit: mm]

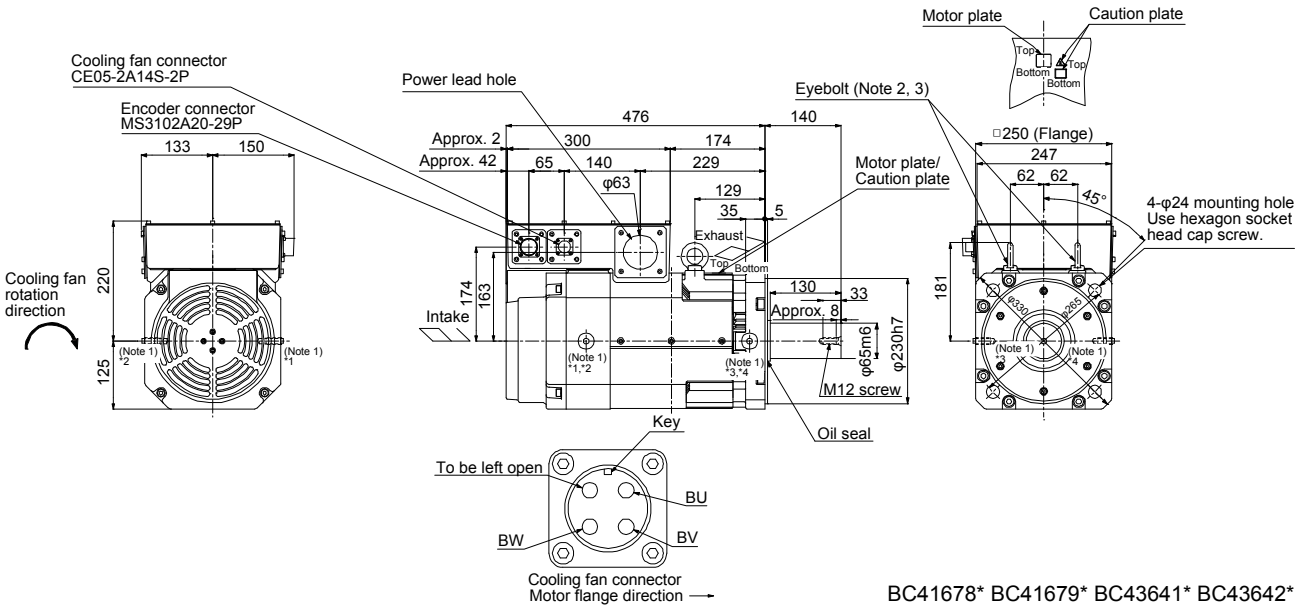

BC41678* BC41679* BC43641* BC43642*

Note 1. *1, *2, *3, and *4 are screw hole for eyebolt (M12).
2. An angle adjusting washer is inserted into the eyebolt.
3. When the motor is used without the eyebolt, plug the threaded hole with a bolt of M12 × 20 or less.

Model	Output [kW]	Moment of inertia J [× 10^{-4} kg•m^2]	Mass [kg]
HG-JR20K1	20	627	145
HG-JR20K14			
HG-JR30K1M	30		
HG-JR30K1M4			

[Unit: mm]

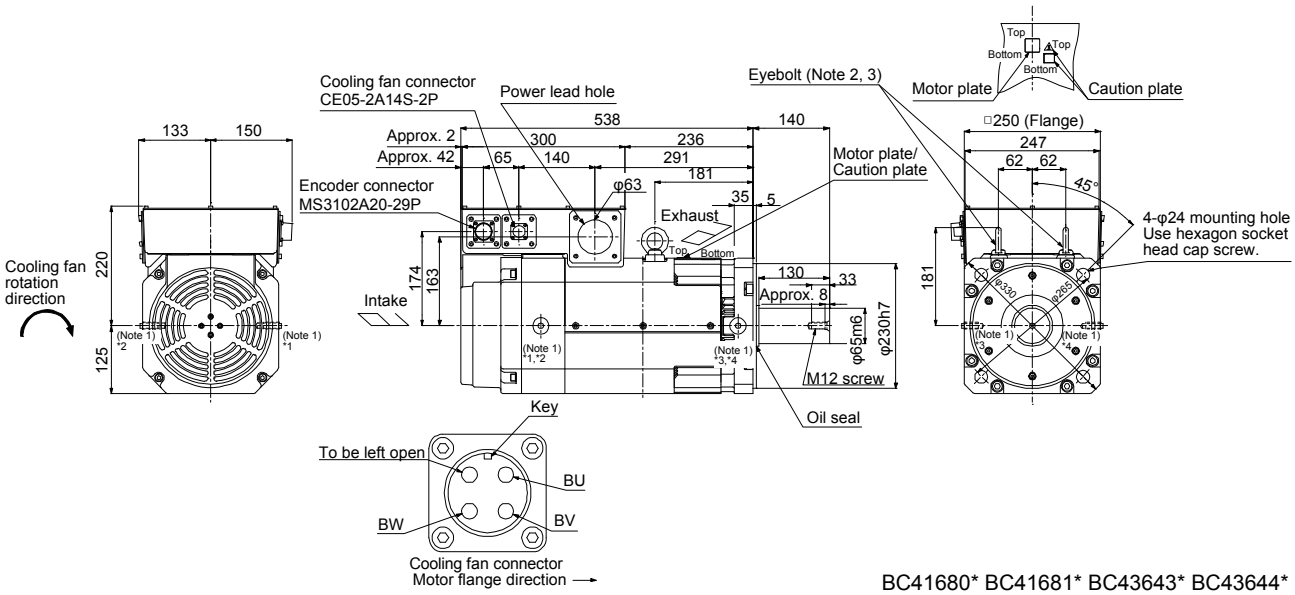

BC41680* BC41681* BC43643* BC43644*

Note 1. *1, *2, *3, and *4 are screw hole for eyebolt (M12).
2. An angle adjusting washer is inserted into the eyebolt.
3. When the motor is used without the eyebolt, plug the threaded hole with a bolt of M12 × 20 or less.

Model	Output [kW]	Moment of inertia J [× 10^{-4} kg•m^2]	Mass [kg]
HG-JR25K1	25	764	165
HG-JR25K14			
HG-JR37K1M	37		
HG-JR37K1M4			

[Unit: mm]

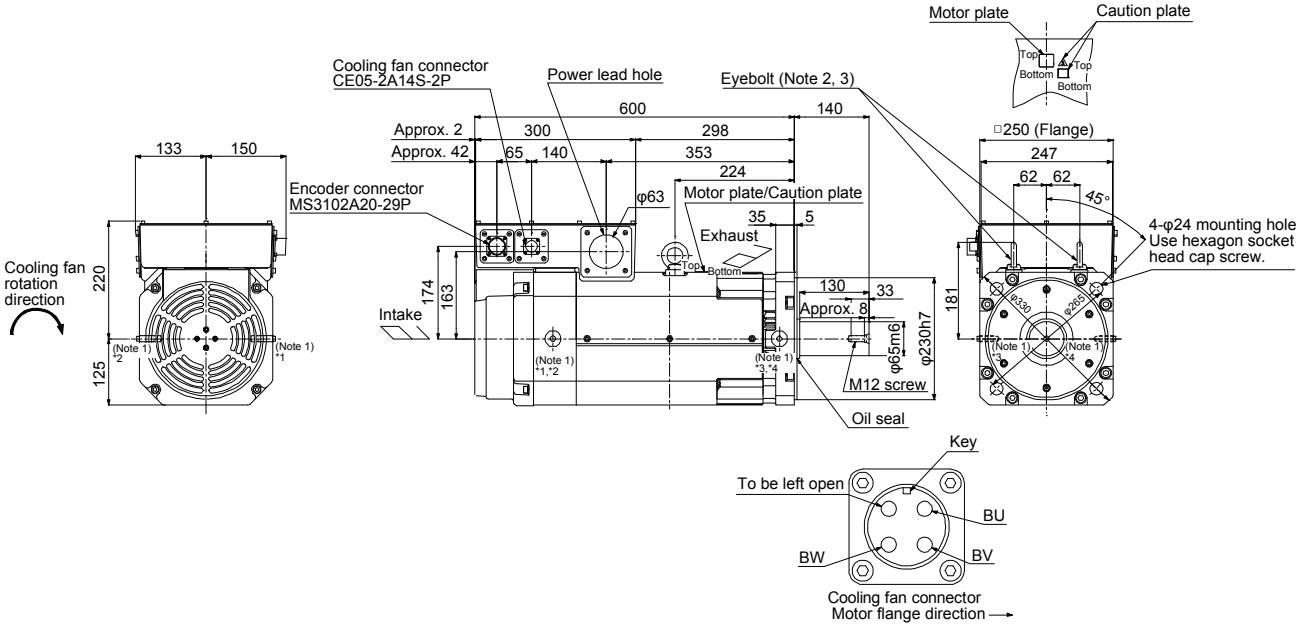

BC41682* BC41683* BC43645* BC43646*

Note 1. *1, *2, *3, and *4 are screw hole for eyebolt (M12).
2. An angle adjusting washer is inserted into the eyebolt.
3. When the motor is used without the eyebolt, plug the threaded hole with a bolt of M12 × 20 or less.

Model	Output [kW]	Moment of inertia J [× 10^{-4} kg•m^2]	Mass [kg]
HG-JR30K1	30	1377	215
HG-JR30K14			
HG-JR45K1M4	45		

[Unit: mm]

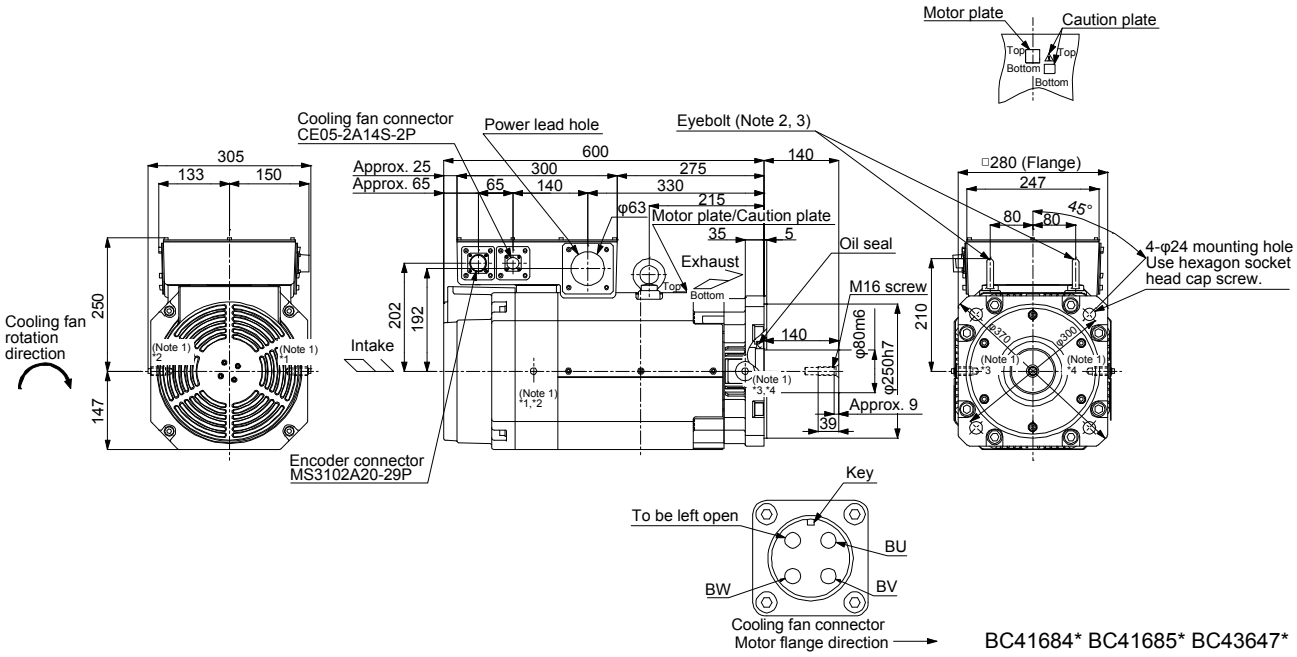

Note 1. *1, *2, *3, and *4 are screw hole for eyebolt (M16).
2. An angle adjusting washer is inserted into the eyebolt.
3. When the motor is used without the eyebolt, plug the threaded hole with a bolt of M16 × 20 or less.

Model	Output [kW]	Moment of inertia J [× 10^{-4} kg•m^2]	Mass [kg]
HG-JR37K1	37	1637	240
HG-JR37K14			
HG-JR55K1M4	55		

[Unit: mm]

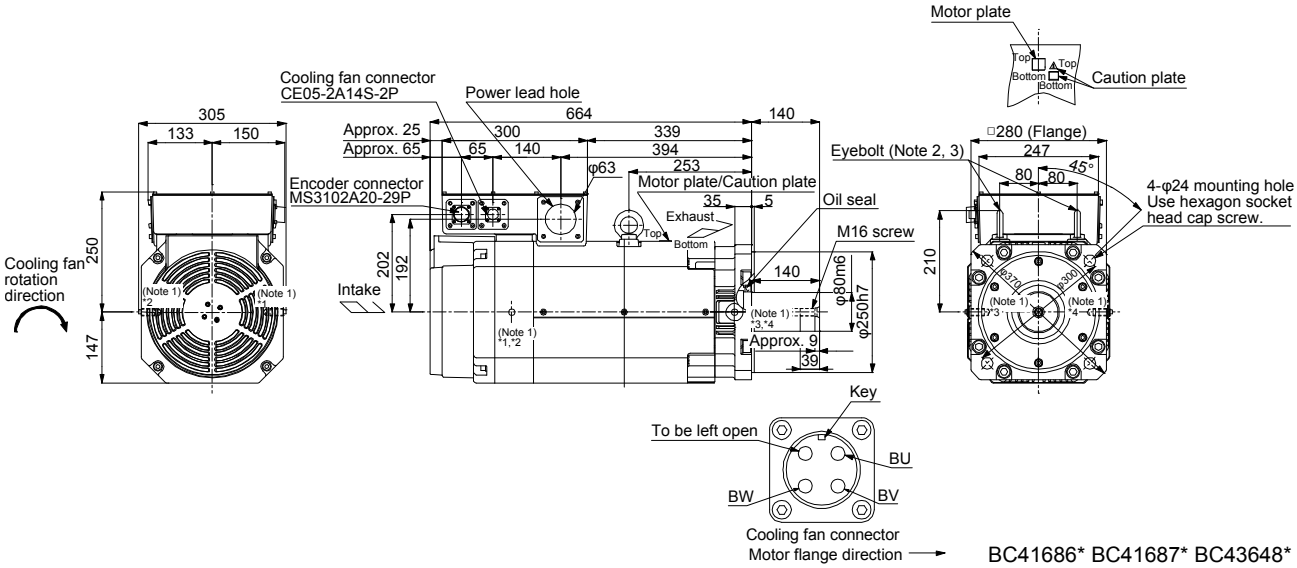

Note 1. *1, *2, *3, and *4 are screw hole for eyebolt (M16).
2. An angle adjusting washer is inserted into the eyebolt.
3. When the motor is used without the eyebolt, plug the threaded hole with a bolt of M16 × 20 or less.

8.8.3 With an electromagnetic brake

Model	Output [kW]	Brake static friction torque [N•m]	Moment of inertia J [× 10^{-4} kg•m^2]	Mass [kg]
HG-JR53B	0.5	6.6	2.02	4.4
HG-JR534B				

[Unit: mm]

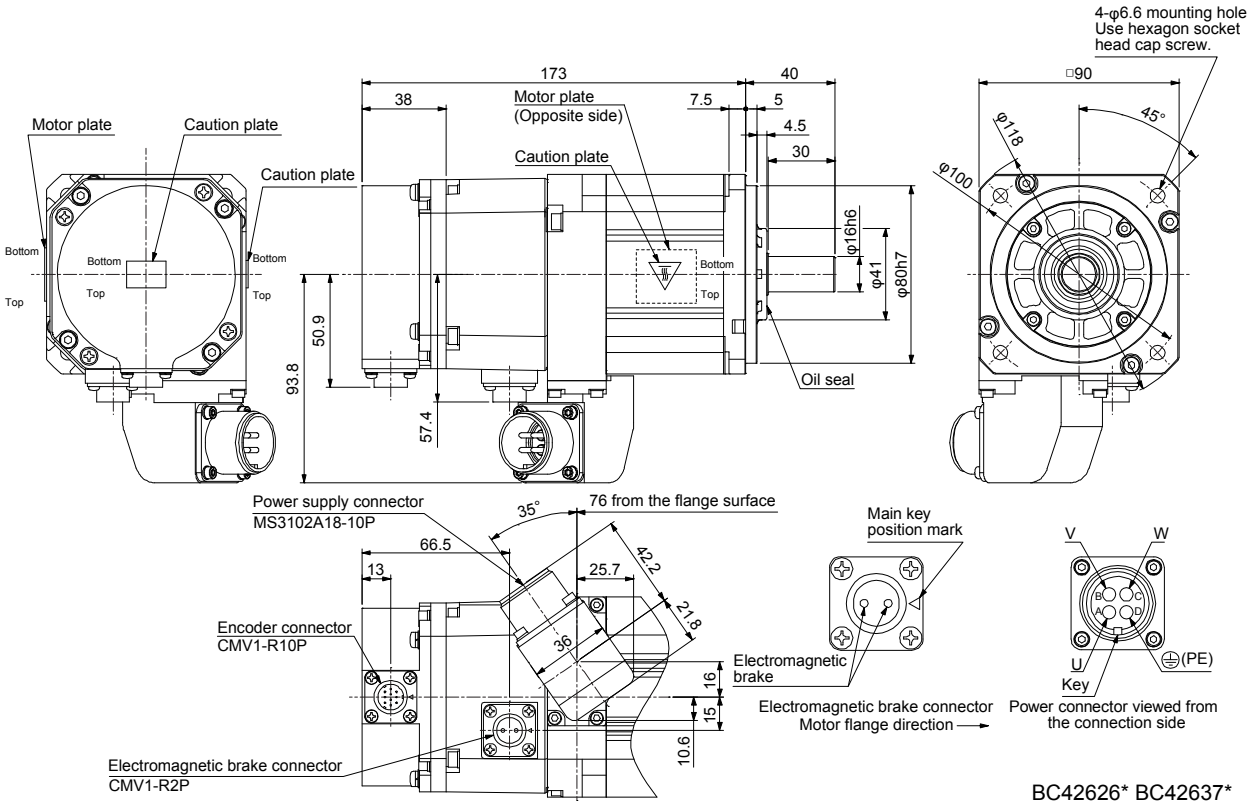

Model	Output [kW]	Brake static friction torque [N•m]	Moment of inertia J [× 10^{-4} kg•m^2]	Mass [kg]
HG-JR73B	0.75	6.6	2.59	5.1
HG-JR734B				

[Unit: mm]

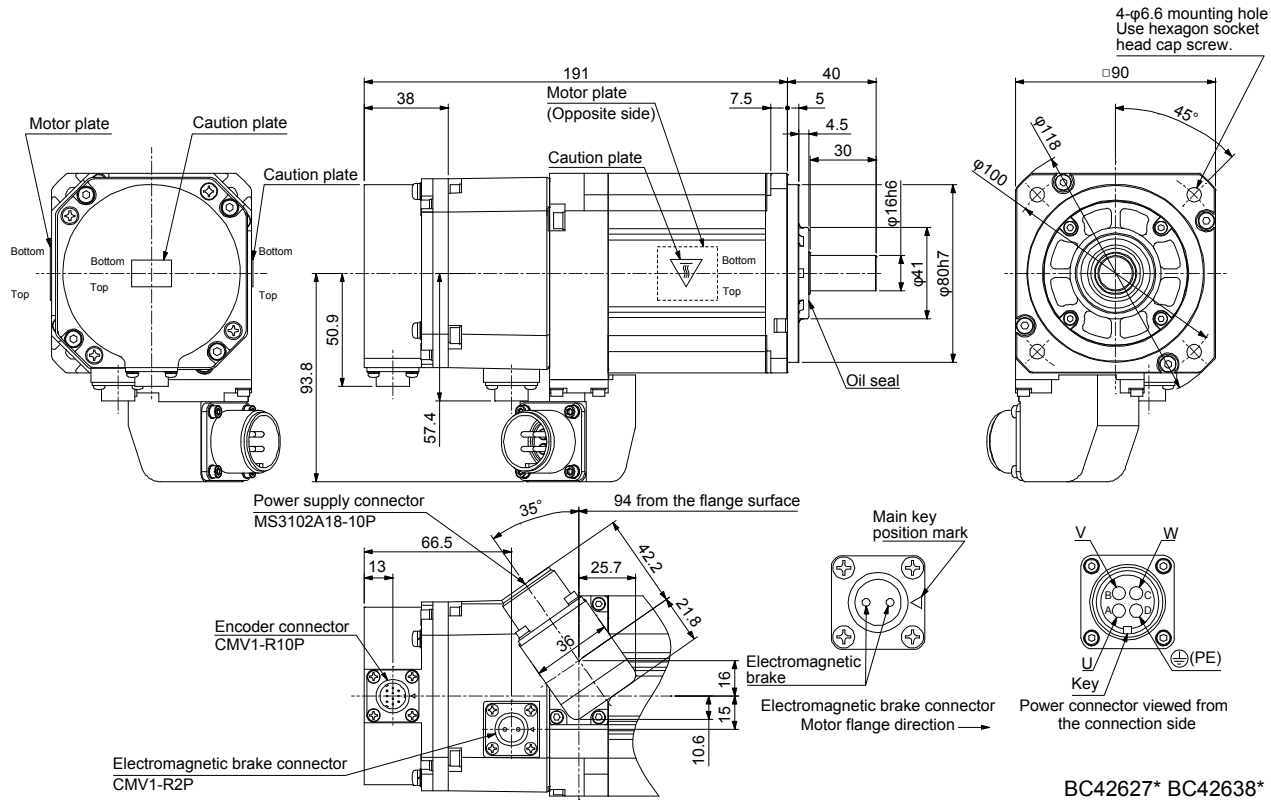

Model	Output [kW]	Brake static friction torque [N•m]	Moment of inertia J [× 10^{-4} kg•m^2]	Mass [kg]
HG-JR103B	1.0	6.6	3.15	5.9
HG-JR1034B				

[Unit: mm]

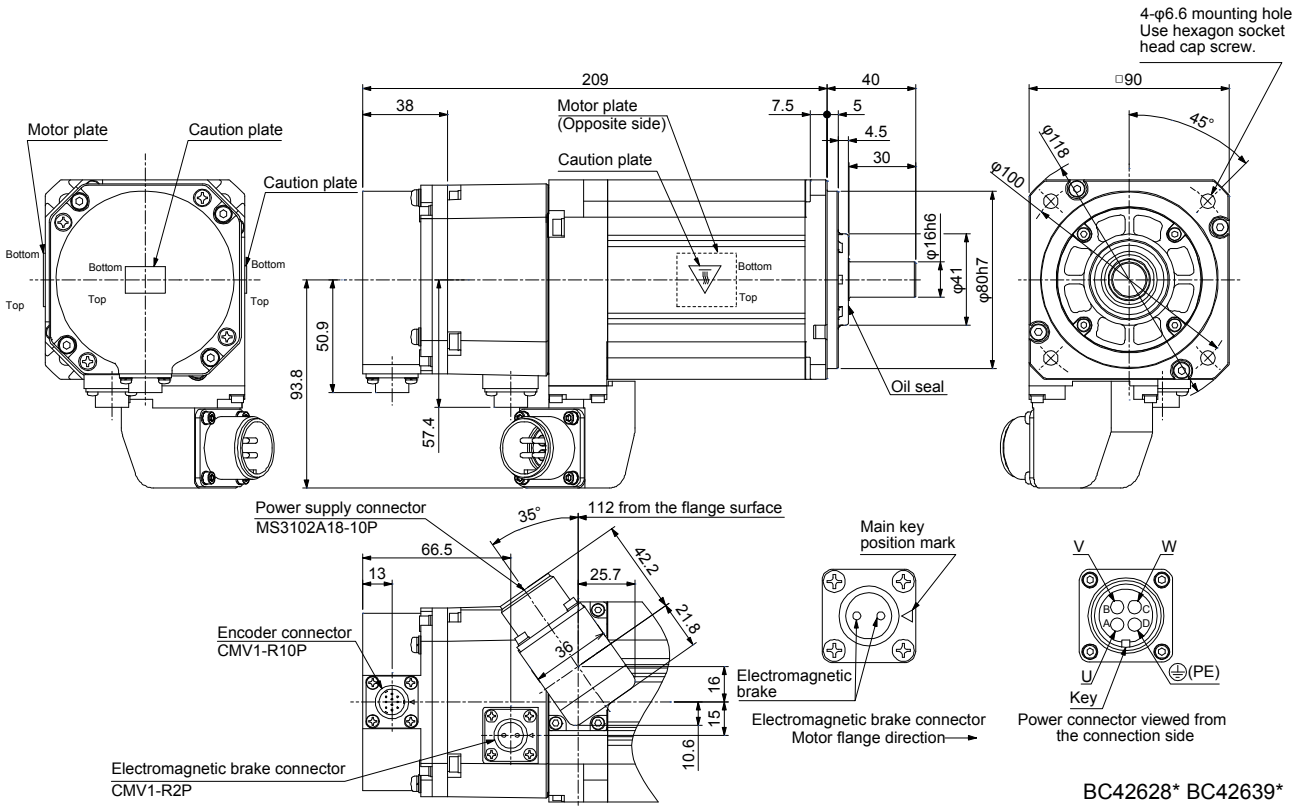

BC42628* BC42639*

Model	Output [kW]	Brake static friction torque [N•m]	Moment of inertia J [× 10^{-4} kg•m^2]	Mass [kg]
HG-JR153B	1.5	6.6	4.29	7.3
HG-JR1534B				

[Unit: mm]

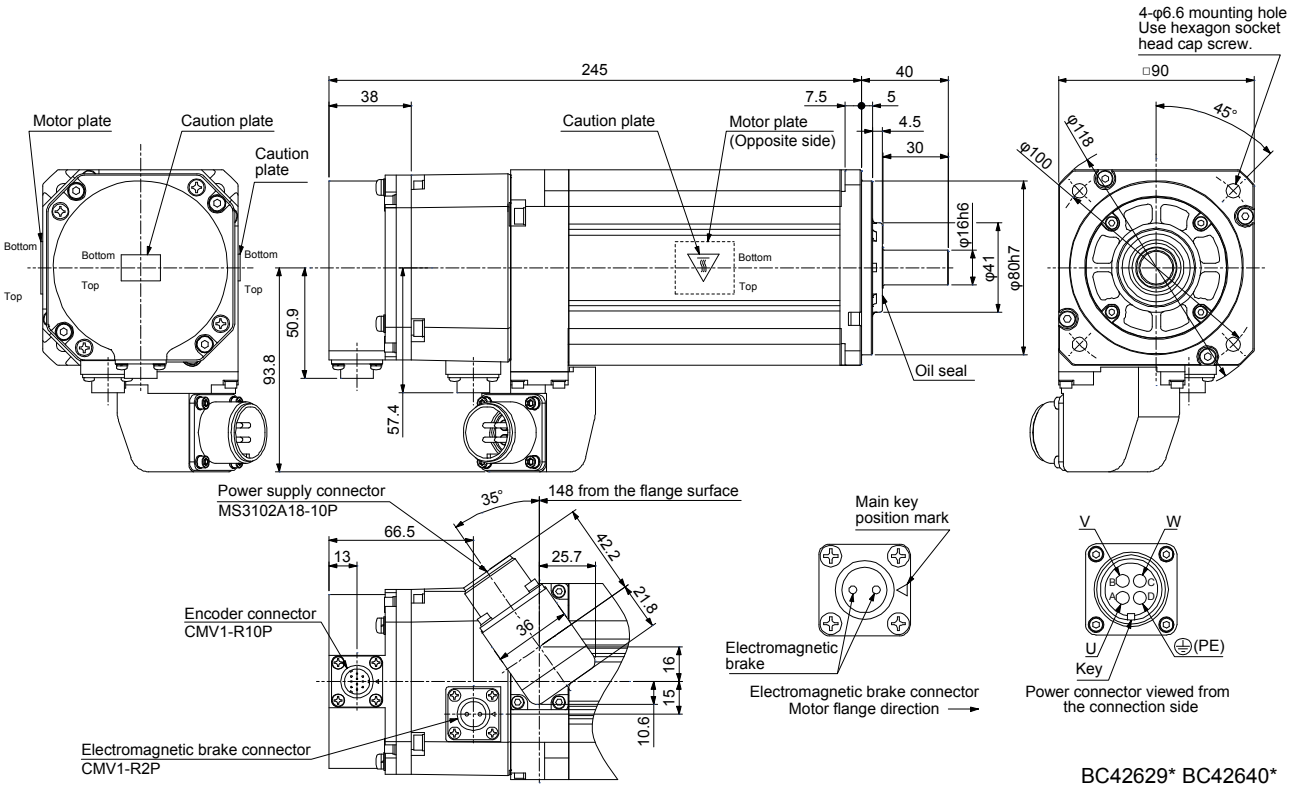

BC42629* BC42640*

Model	Output [kW]	Brake static friction torque [N•m]	Moment of inertia J [× 10^{-4} kg•m^2]	Mass [kg]
HG-JR203B	2.0	6.6	5.42	8.9
HG-JR2034B				

[Unit: mm]

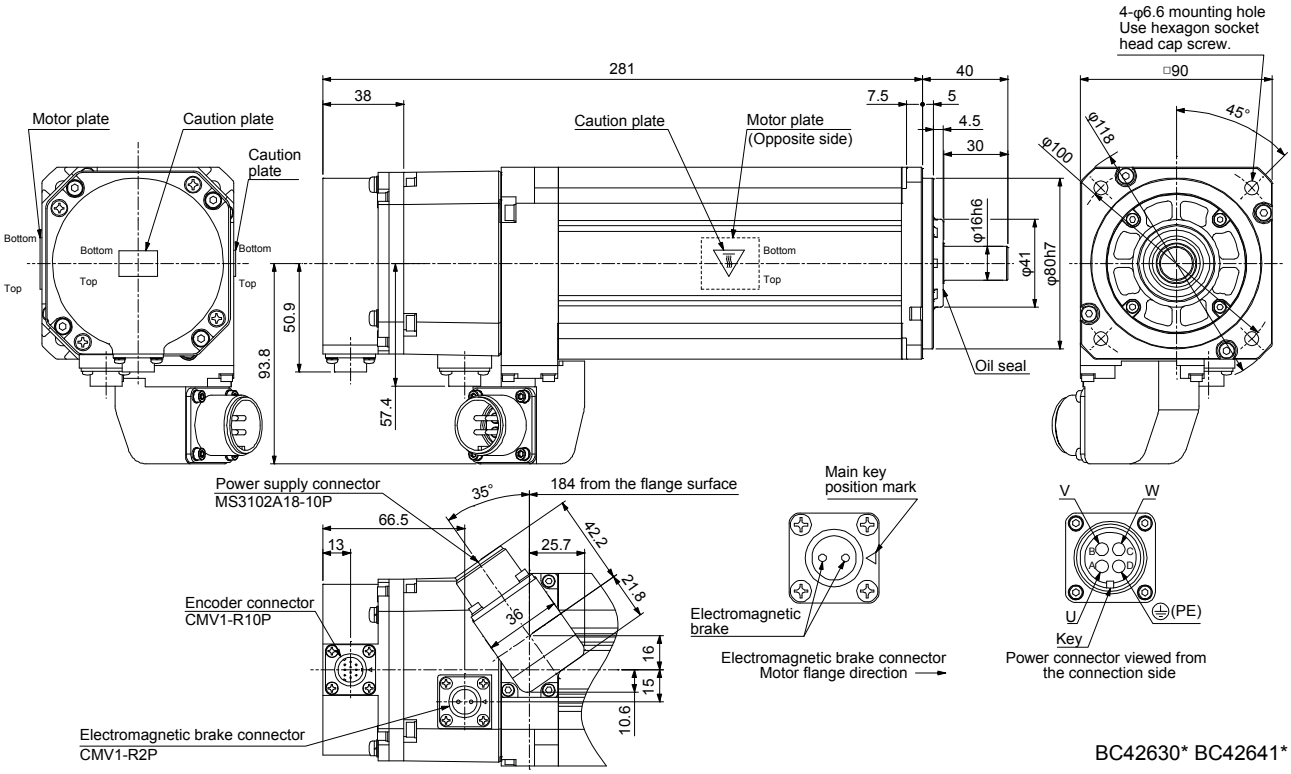

BC42630* BC42641*

Model	Output [kW]	Brake static friction torque [N•m]	Moment of inertia J [× 10^{-4} kg•m^2]	Mass [kg]
HG-JR353B	3.5	16	15.4	15

[Unit: mm]

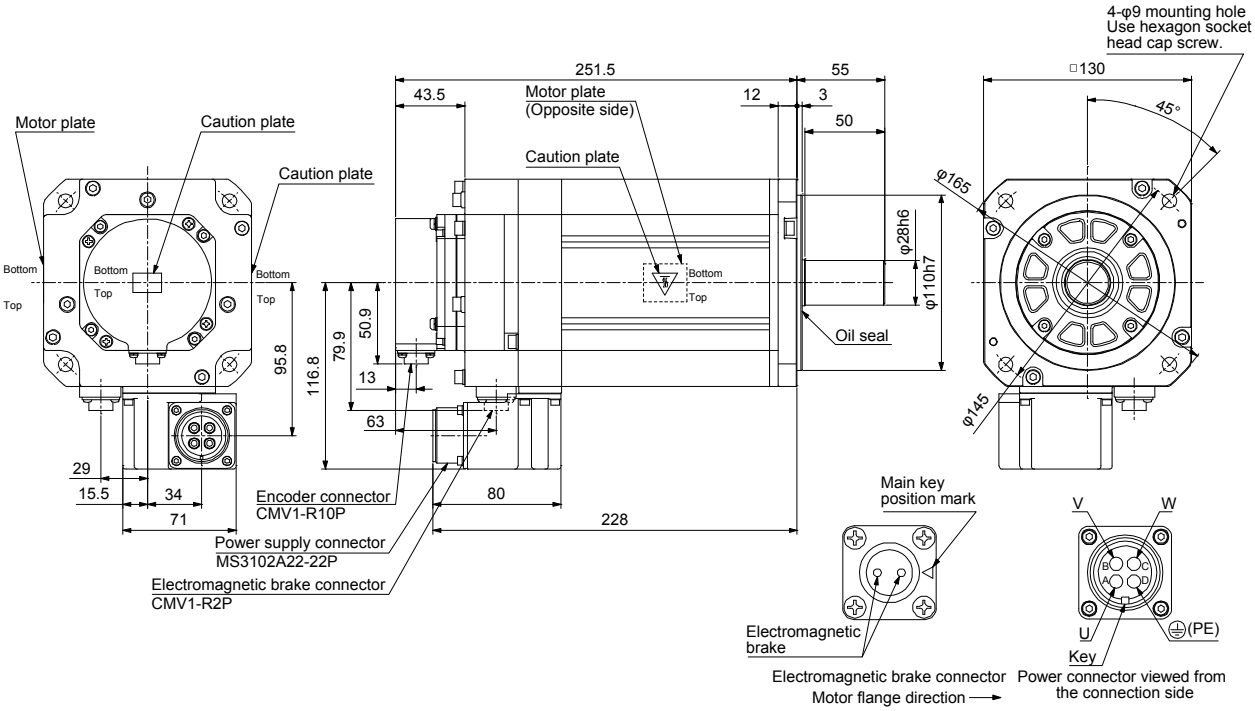

BC42631*

Model	Output [kW]	Brake static friction torque [N•m]	Moment of inertia J [× 10^{-4} kg•m^2]	Mass [kg]
HG-JR3534B	3.5	16	15.4	15

[Unit: mm]

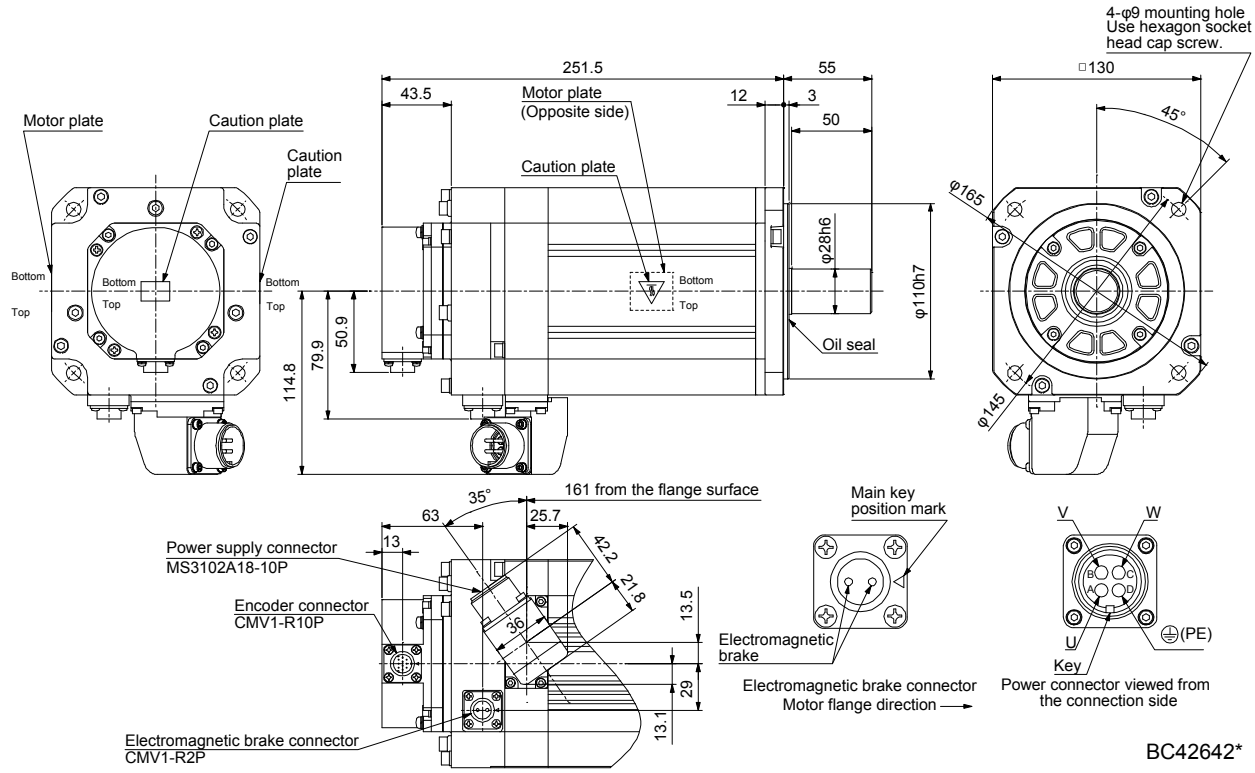

BC42642*

Model	Output [kW]	Brake static friction torque [N•m]	Moment of inertia J [× 10^{-4} kg•m^2]	Mass [kg]
HG-JR503B	5.0	16	21.2	20

[Unit: mm]

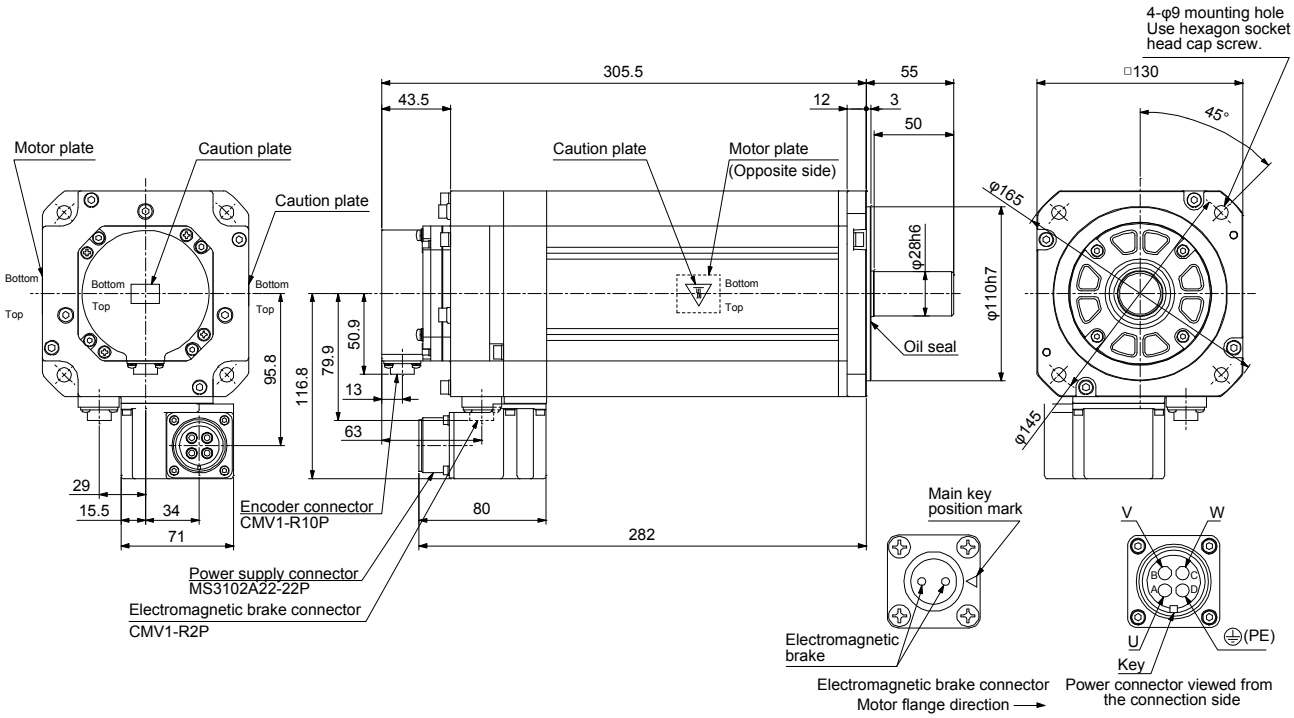

BC42632*

Model	Output [kW]	Brake static friction torque [N•m]	Moment of inertia J [× 10^{-4} kg•m^2]	Mass [kg]
HG-JR5034B	5.0	16	21.2	20

[Unit: mm]

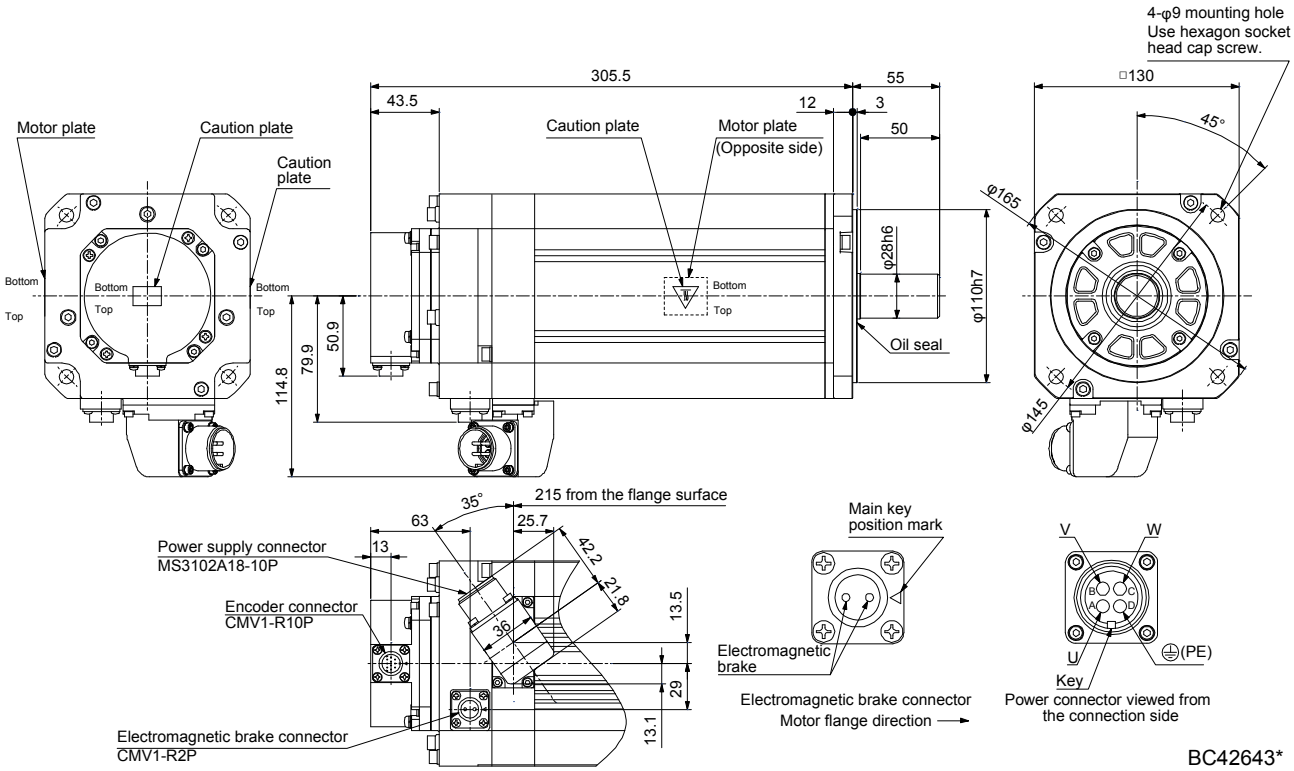

BC42643*

Model	Output [kW]	Brake static friction torque [N•m]	Moment of inertia J [× 10^{-4} kg•m^2]	Mass [kg]
HG-JR703B	7.0	44	52.9	35
HG-JR7034B				

[Unit: mm]

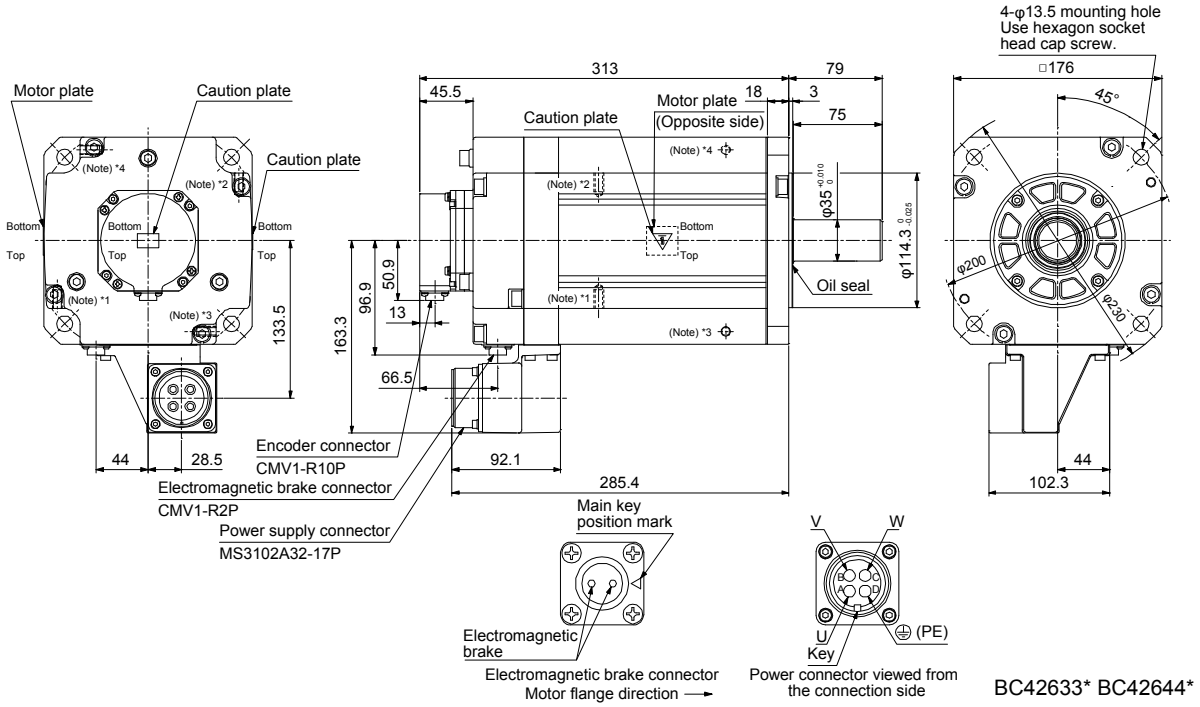

BC42633* BC42644*

Note. *1, *2, *3, and *4 are screw hole for eyebolt (M8).

Model	Output [kW]	Brake static friction torque [N•m]	Moment of inertia J [× 10^{-4} kg•m^2]	Mass [kg]
HG-JR903B	9.0	44	65.4	42
HG-JR9034B				

[Unit: mm]

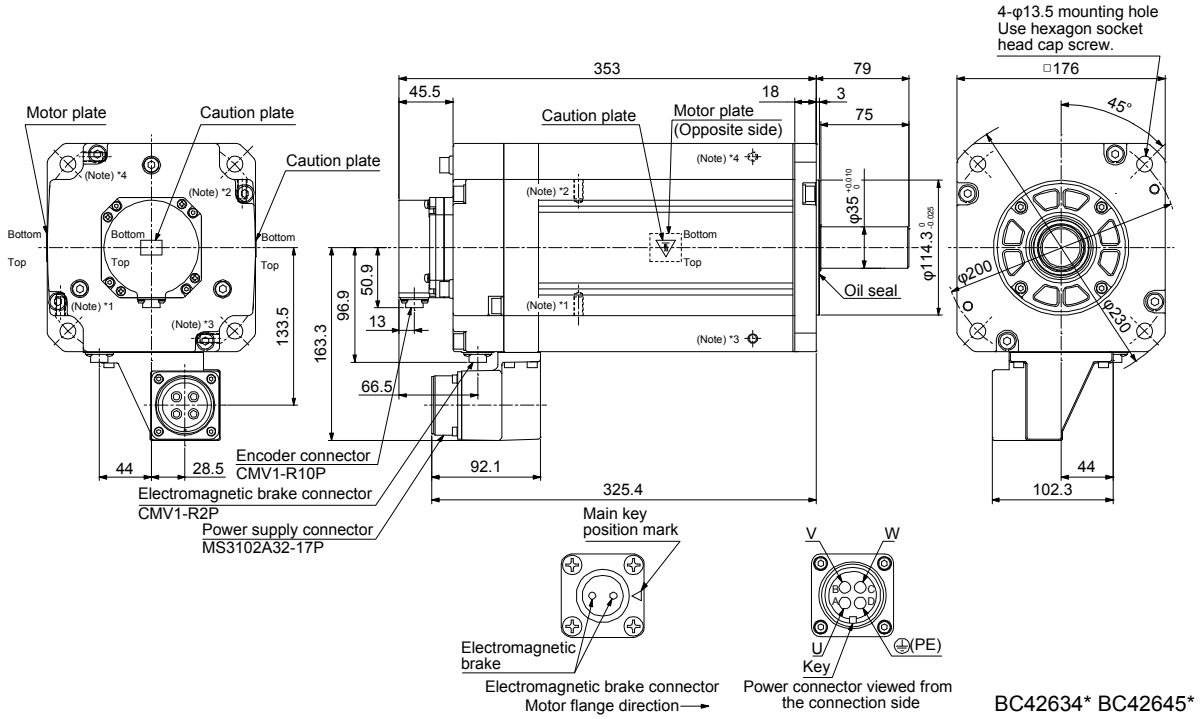

BC42634* BC42645*

Note. *1, *2, *3, and *4 are screw hole for eyebolt (M8).

Model	Output [kW]	Brake static friction torque [N•m]	Moment of inertia J [× 10^{-4} kg•m^2]	Mass [kg]
HG-JR601B	6	126	196	65
HG-JR6014B				
HG-JR701MB	7			
HG-JR701M4B				

[Unit: mm]

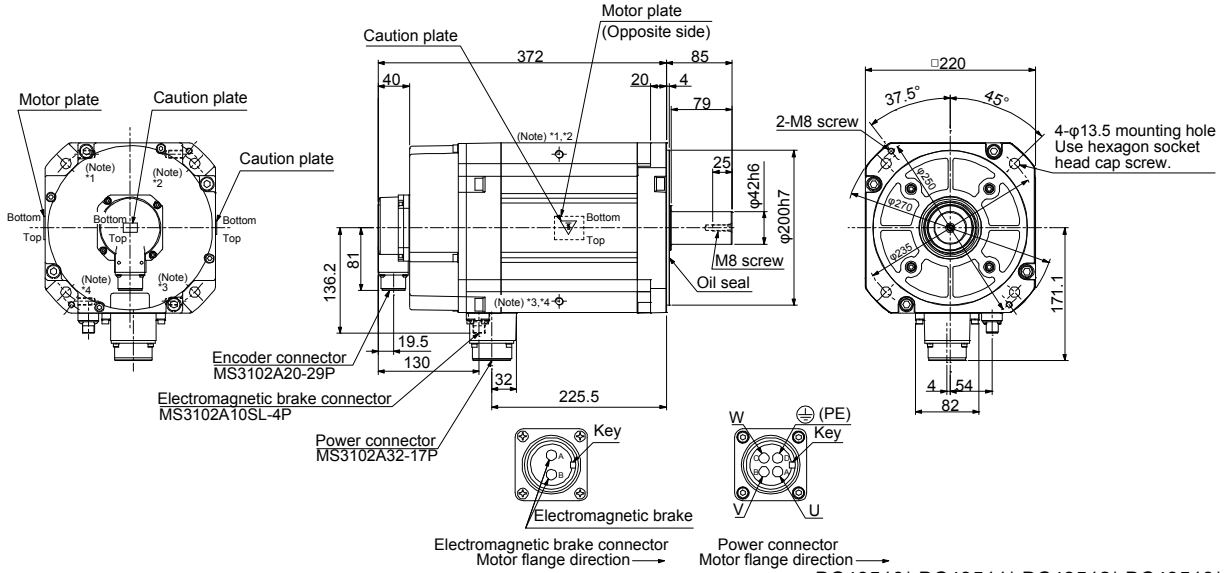

BC43510* BC43511* BC43512* BC43513*

Note. *1, *2, *3, and *4 are screw hole for eyebolt (M10).

Model	Output [kW]	Brake static friction torque [N•m]	Moment of inertia J [× 10^{-4} kg•m^2]	Mass [kg]
HG-JR801B	8	126	240	74
HG-JR8014B				
HG-JR11K1MB	11			
HG-JR11K1M4B				

[Unit: mm]

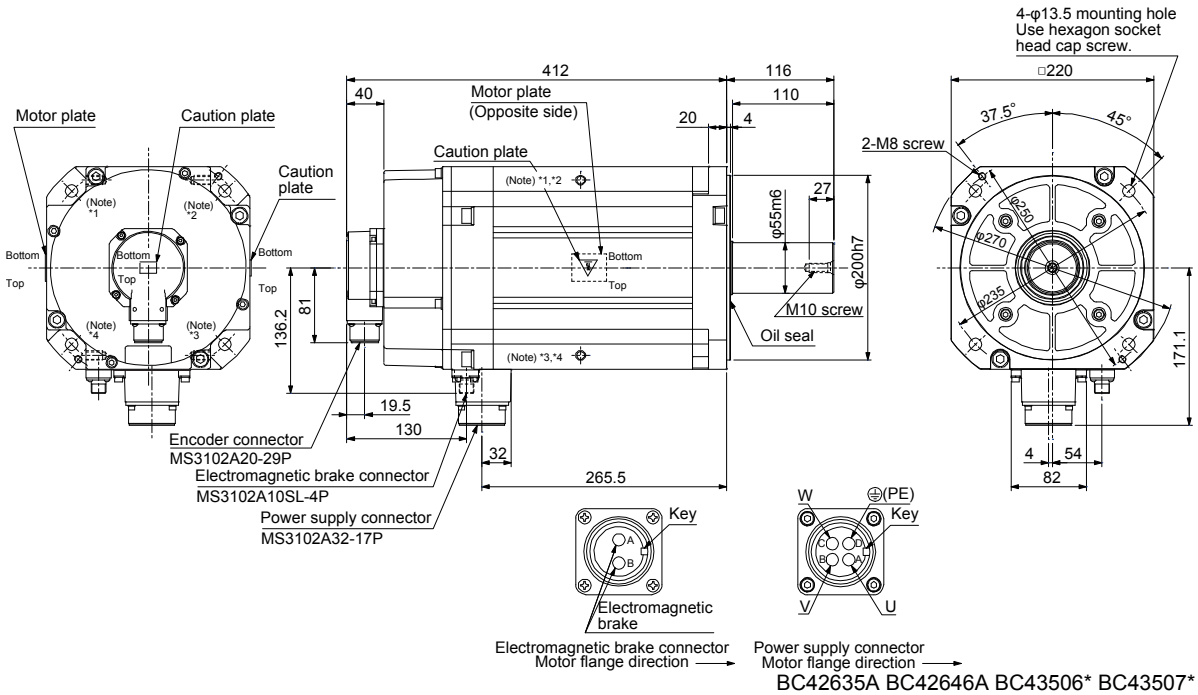

BC42635A BC42646A BC43506* BC43507*

Note. *1, *2, *3, and *4 are screw hole for eyebolt (M10).

Model	Output [kW]	Brake static friction torque [N•m]	Moment of inertia J [× 10^{-4} kg•m^2]	Mass [kg]
HG-JR12K1B	12	126	336	97
HG-JR12K14B				
HG-JR15K1MB	15			
HG-JR15K1M4B				

[Unit: mm]

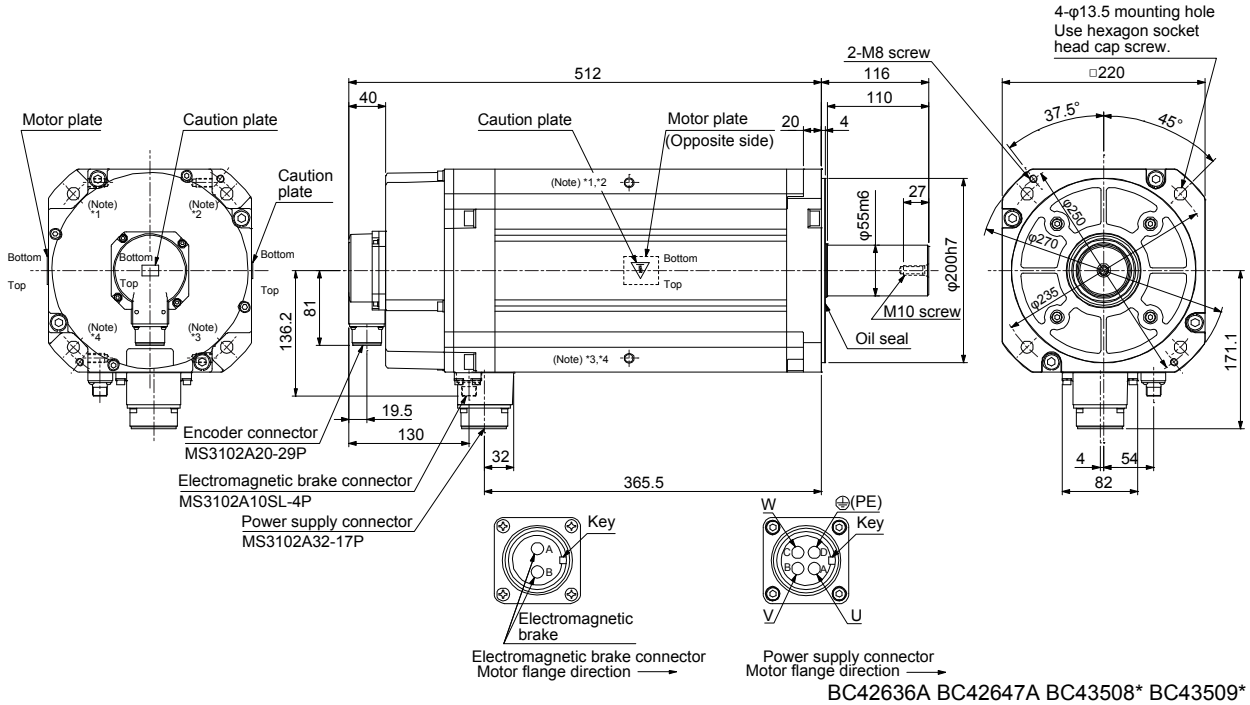

BC42636A BC42647A BC43508* BC43509*

Note. *1, *2, *3, and *4 are screw hole for eyebolt (M10).

MEMO

9. HG-RR SERIES

This chapter provides information on the servo motor specifications and characteristics. When using the HG-RR series servo motor, always read the Safety Instructions in the beginning of this manual and chapters 1 to 5, in addition to this chapter.

9.1 Model designation

The following describes model designation. Not all combinations of the symbols are available.

HG-RR103BK

Series

Rated output

Symbol	Rated output [kW]
10	1
15	1.5
20	2
35	3.5
50	5

Rated speed
3000 [r/min]

Shaft type

Symbol	Shaft shape
None	Standard (straight shaft)
K	(Note) Keyway shaft

Electromagnetic brake

Symbol	Electromagnetic brake
None	None
B	With

Appearance

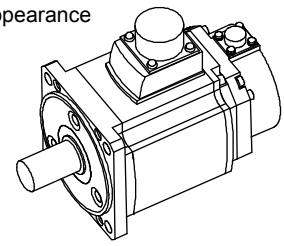

Note. Key is not included.

9.2 Combination list of servo motors and servo amplifiers

Servo motor	Servo amplifier
HG-RR103	MR-J4-200A MR-J4-200A-RJ MR-J4-200B MR-J4-200B-RJ MR-J4-200B-RJ010 MR-J4-200B-RJ020 MR-J4-200GF MR-J4-200GF-RJ
HG-RR153	
HG-RR203	MR-J4-350A MR-J4-350A-RJ MR-J4-350B MR-J4-350B-RJ MR-J4-350B-RJ010 MR-J4-350B-RJ020 MR-J4-350GF MR-J4-350GF-RJ
HG-RR353	MR-J4-500A MR-J4-500A-RJ MR-J4-500B MR-J4-500B-RJ MR-J4-500B-RJ010 MR-J4-500B-RJ020 MR-J4-500GF MR-J4-500GF-RJ
HG-RR503	

9.3 Standard specifications

9.3.1 Standard specifications list

Item \ Servo motor			HG-RR series (ultra-low inertia/medium capacity)				
			103(B)	153(B)	203(B)	353(B)	503(B)
Power supply capacity			Refer to "Power supply equipment capacity and generated loss of servo amplifiers" in Servo Amplifier Instruction Manual.				
Continuous running duty (Note 1)	Rated output [kW]		1.0	1.5	2.0	3.5	5.0
	Rated torque [N•m]		3.2	4.8	6.4	11.1	15.9
Maximum torque [N•m]			8.0	11.9	15.9	27.9	39.8
Rated speed (Note 1) [r/min]			3000				
Maximum speed [r/min]			4500				
Instantaneous permissible speed [r/min]			5175				
Power rate at continuous rated torque	Standard [kW/s]		67.4	120	176	150	211
	With an electromagnetic brake [kW/s]		54.8	101	153	105	163
Rated current [A]			6.1	8.8	14	23	28
Maximum current [A]			18	23	37	58	70
Moment of inertia J	Standard [× 10^{-4} kg•m^2]		1.50	1.90	2.30	8.30	12.0
	With an electromagnetic brake [× 10^{-4} kg•m^2]		1.85	2.25	2.65	11.8	15.5
Recommended load to motor inertia ratio (Note 2)			5 times or less				
Speed/position detector			22-bit encoder common to absolute position/incremental (resolution per servo motor revolution: 4194304 pulses/rev)				
Oil seal			With				
Insulation class			155 (F)				
Structure			Totally-enclosed, natural-cooling (IP rating: IP65 (Note 3))				
Environment (Note 4)	Ambient temperature	Operation	0 ˚C to 40 ˚C (non-freezing)				
		Storage	-15 ˚C to 70 ˚C (non-freezing)				
	Ambient humidity	Operation	80 %RH or less (non-condensing)				
		Storage	90 %RH or less (non-condensing)				
	Ambience		Indoors (no direct sunlight), free from corrosive gas, flammable gas, oil mist, dust, and dirt				
	Altitude		2000 m or less above sea level (Note 8)				
	Vibration resistance (Note 5)		X, Y: 24.5 m/s^2				
Vibration rank (Note 6)			V10				
Permissible load for the shaft (Note 7)	L [mm]		45			63	
	Radial [N]		686			980	
	Thrust [N]		196			392	
Mass	Standard [kg]		3.9	5.0	6.2	12	17
	With an electromagnetic brake [kg]		6.0	7.0	8.3	15	21

Note 1. When the power supply voltage drops, the output and the rated speed cannot be guaranteed.
2. If the load to motor inertia ratio exceeds the indicated value, contact your local sales office.
3. Except for the shaft-through portion. IP classifies the degrees of protection provided against the intrusion of solid objects and water in electrical enclosures.
4. In the environment where the servo motor is exposed to oil mist, oil, or water, the servo motor of the standard specifications may not be usable. Please contact your local sales office.
5. The following figure shows the vibration directions. The value is the one at the part that indicates the maximum value (normally the opposite to load-side bracket). When the servo motor stops, fretting is likely to occur at the bearing. Therefore, suppress the vibration to about half of the permissible value.

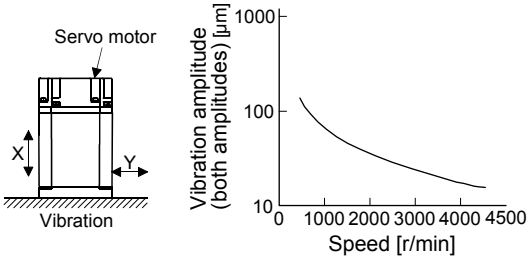

6. V10 indicates that the amplitude of a single servo motor is 10 μm or less. The following figure shows the servo motor mounting position for measurement and the measuring position.

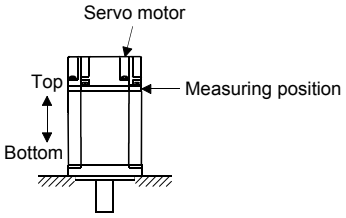

7. The following shows permissible load for the shaft. Do not subject the shaft to load greater than the value in the specifications list. The value assumes that the load is applied independently.

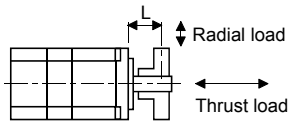

L: Distance from flange mounting surface to load center

8. Follow the restrictions in section 2.10 when using the servo amplifiers at altitude exceeding 1000 m and up to 2000 m above sea level.

9.3.2 Torque characteristics

POINT

- For the system where the unbalanced torque occurs, such as a vertical axis system, the unbalanced torque of the machine should be kept at 70% or less of the rated torque.
- When using an HG-RR103 or HG-RR153 with the 1-phase 200 V AC input, contact your local sales office.

When the power supply input of the servo amplifier is 3-phase 200 V AC, the torque characteristic is indicated by the heavy line.

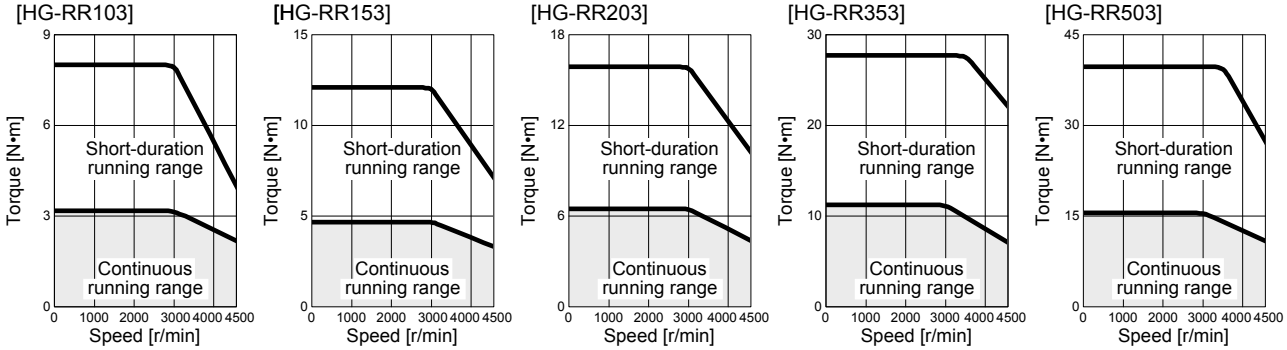

9.4 Electromagnetic brake characteristics

⚠CAUTION	●The electromagnetic brake is provided to prevent a drop at a power failure or servo alarm occurrence during vertical drive or to hold a shaft at a stop. Do not use it for normal braking (including braking at servo-lock). ●Before operating the servo motor, be sure to confirm that the electromagnetic brake operates properly. ●The operation time of the electromagnetic brake differs depending on the power supply circuit you use. Be sure to check the operation delay time with a real machine.

The characteristics of the electromagnetic brake provided for the servo motor with an electromagnetic brake are indicated below.

Item \ Servo motor		HG-RR series	
		103B/153B/203B	353B/503B
Type (Note 1)		Spring actuated type safety brake	
Rated voltage (Note 4)		24 V DC $^{0}_{-10\%}$	
Power consumption [W] at 20 °C		19	23
Coil resistance (Note 6) [Ω]		30.0	25
Inductance (Note 6) [H]		0.81	0.70
Brake static friction torque [N•m]		7.0	17
Release delay time (Note 2) [s]		0.03	0.04
Braking delay time (Note 2) [s]	DC off	0.03	0.03
Permissible braking work	Per braking [J]	400	400
	Per hour [J]	4000	4000
Brake looseness at servo motor shaft (Note 5) [degrees]		0.2 to 0.6	0.2 to 0.6
Brake life (Note 3)	Number of brakings [times]	20000	20000
	Work per braking [J]	200	200
Selection example of surge absorbers to be used (Note 7, 8)	For the suppressed voltage 125 V	TND20V-680KB	
	For the suppressed voltage 350 V	TND10V-221KB	

Note 1. There is no manual release mechanism. When it is necessary to hand-turn the servo motor shaft for machine centering, etc., use a separate 24 V DC power supply to release the brake electrically.
2. The value for initial on gap at 20 °C.
3. The brake gap will increase as the brake lining wears, but the gap is not adjustable.
The brake life indicated is the number of braking cycles after which adjustment will be required.
4. Always prepare a power supply exclusively used for the electromagnetic brake.
5. These are design values. These are not guaranteed values.
6. These are measured values. These are not guaranteed values.
7. Select the electromagnetic brake control relay properly, considering the characteristics of the electromagnetic brake and surge absorber. When you use a diode for a surge absorber, the electromagnetic braking time will be longer.
8. Manufactured by Nippon Chemi-Con Corporation.

9.5 Servo motors with special shafts

The servo motors with special shafts indicated by the symbol (K) in the table are available. K is the symbol attached to the servo motor model names.

Servo motor	Shaft shape
	Key shaft (without key)
HG-RR_(B)K	K

Servo motor	Variable dimensions							
	S	R	Q	W	QK	QL	U	r
HG-RR103(B)K HG-RR153(B)K HG-RR203(B)K	24h6	45	40	$8^{0}_{-0.036}$	25	5	$4^{+0.2}_{0}$	4
HG-RR353(B)K HG-RR503(B)K	28h6	63	58	$8^{0}_{-0.036}$	53	3	$4^{+0.2}_{0}$	4

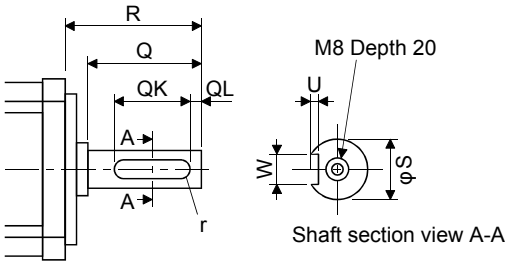

9.6 Oil seal

The oil seal prevents the entry of oil into the servo motor.
Install the servo motor horizontally, and set the oil level in the gear box to be lower than the oil seal lip always.

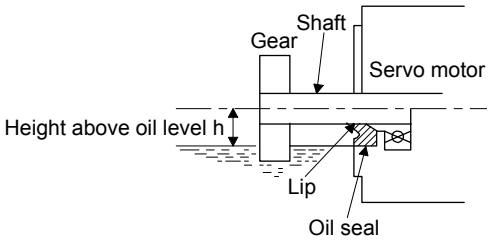

Servo motor	Oil level h [mm]
HG-RR103(B) HG-RR153(B) HG-RR203(B) HG-RR353(B) HG-RR503(B)	20

9.7 Dimensions

Moment of inertia on the table is the value calculated by converting the total value of moment of inertia for servo motor and electromagnetic brake with servo motor shaft. The dimensions without tolerances are general tolerance.

9.7.1 Standard (without an electromagnetic brake)

Model	Output [kW]	Moment of inertia J [× 10^{-4} kg•m^2]	Mass [kg]
HG-RR103	1.0	1.50	3.9

[Unit: mm]

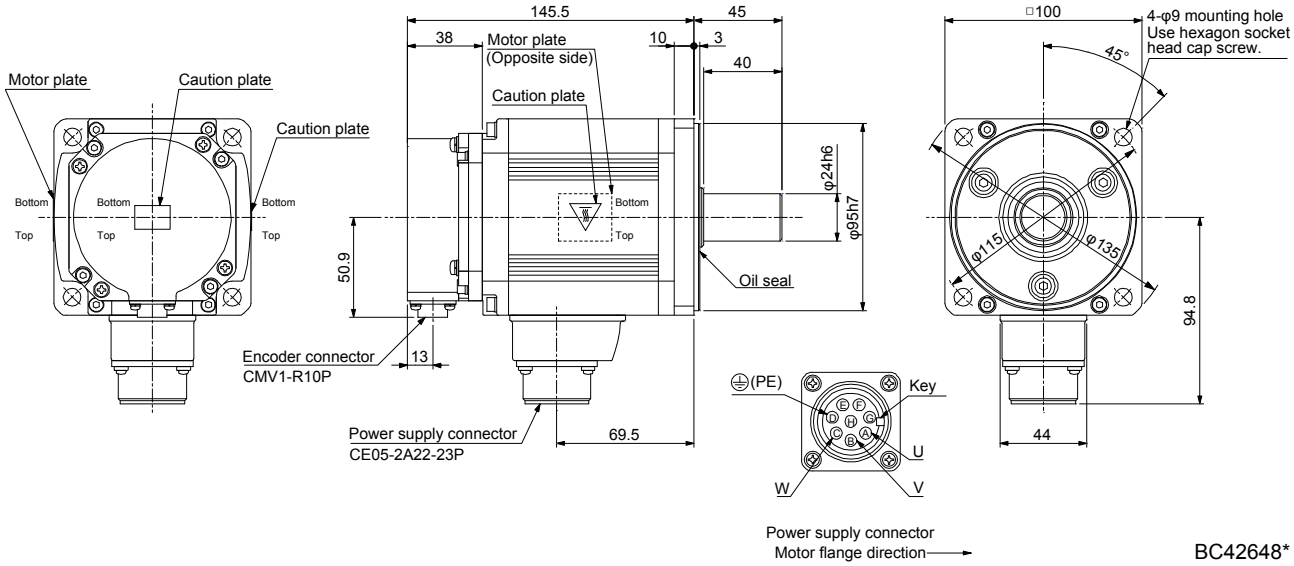

BC42648*

Model	Output [kW]	Moment of inertia J [× 10^{-4} kg•m^2]	Mass [kg]
HG-RR153	1.5	1.90	5.0

[Unit: mm]

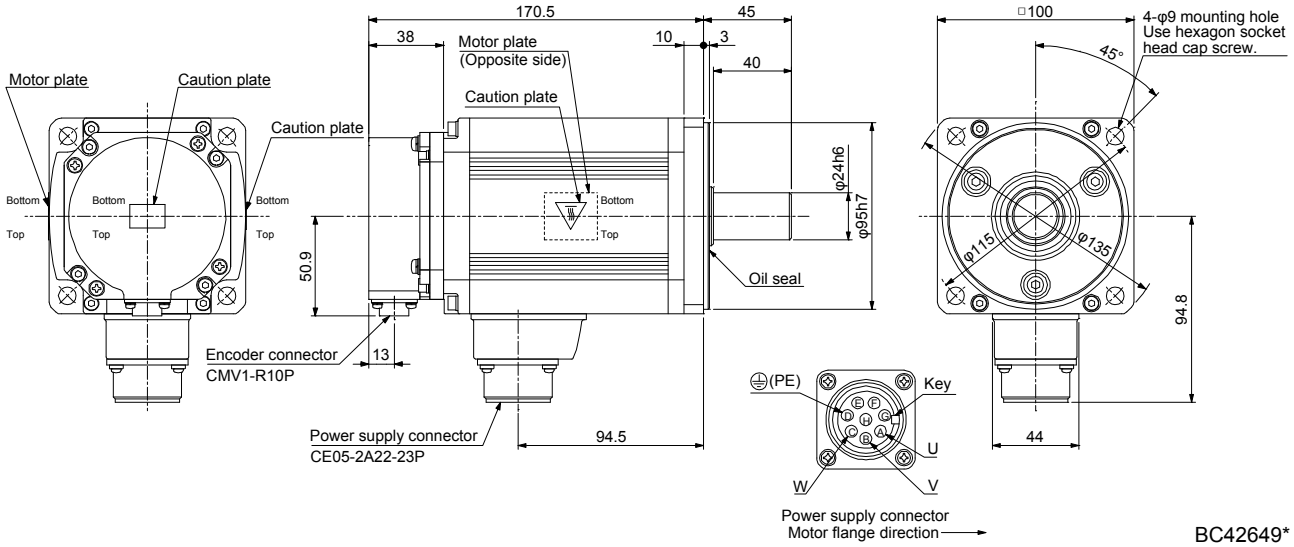

BC42649*

Model	Output [kW]	Moment of inertia J [× 10^{-4} kg•m^2]	Mass [kg]
HG-RR203	2.0	2.30	6.2

[Unit: mm]

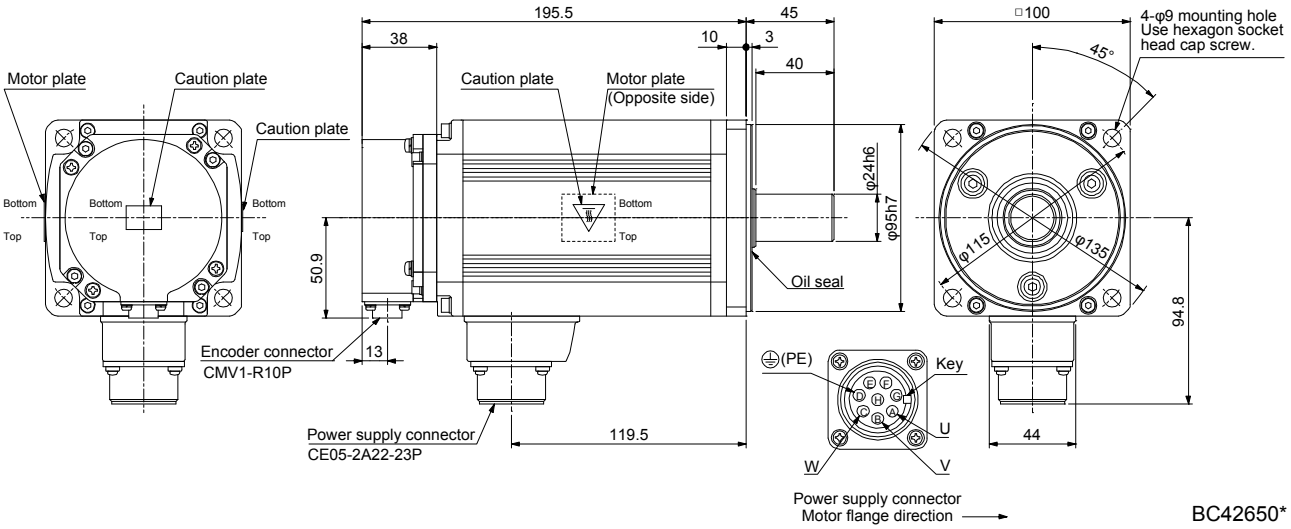

BC42650*

Model	Output [kW]	Moment of inertia J [× 10^{-4} kg•m^2]	Mass [kg]
HG-RR353	3.5	8.30	12

[Unit: mm]

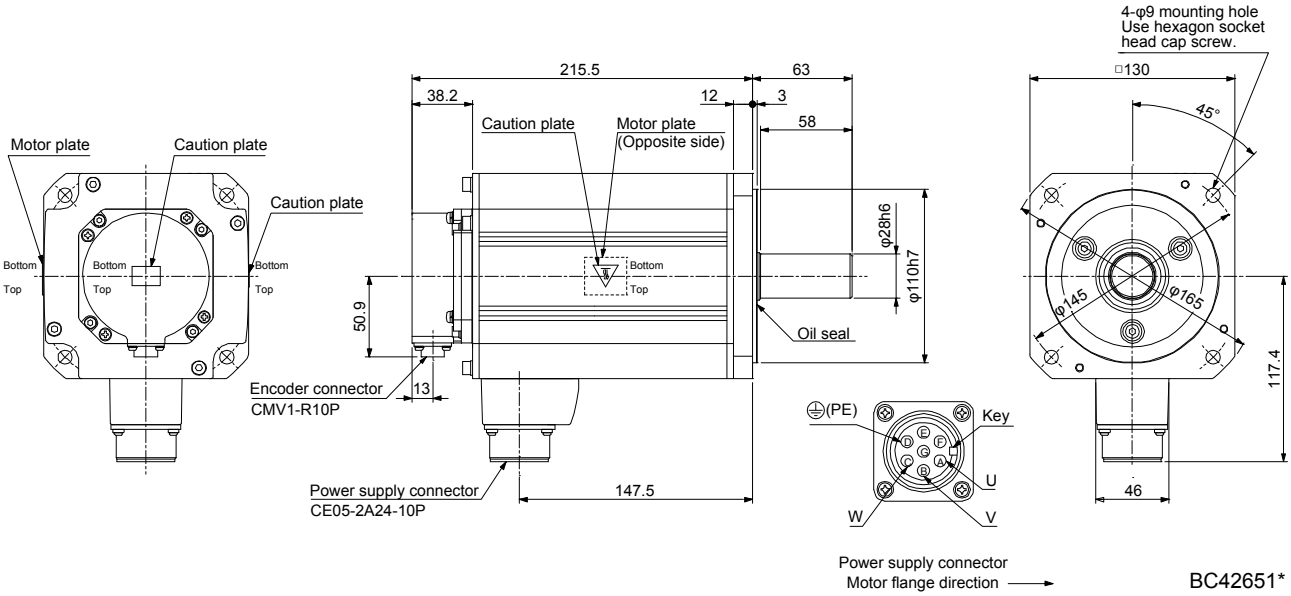

BC42651*

Model	Output [kW]	Moment of inertia J [× 10^{-4} kg•m^2]	Mass [kg]
HG-RR503	5.0	12.0	17

[Unit: mm]

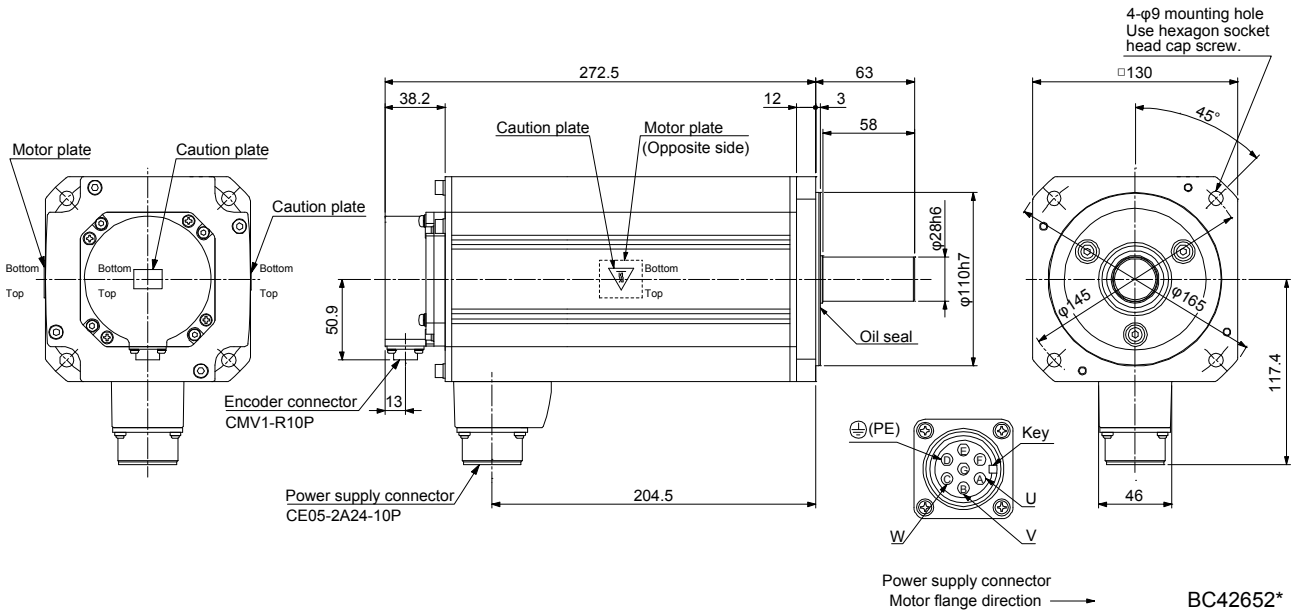

9.7.2 With an electromagnetic brake

Model	Output [kW]	Brake static friction torque [N•m]	Moment of inertia J [× 10^{-4} kg•m^2]	Mass [kg]
HG-RR103B	1.0	7.0	1.85	6.0

[Unit: mm]

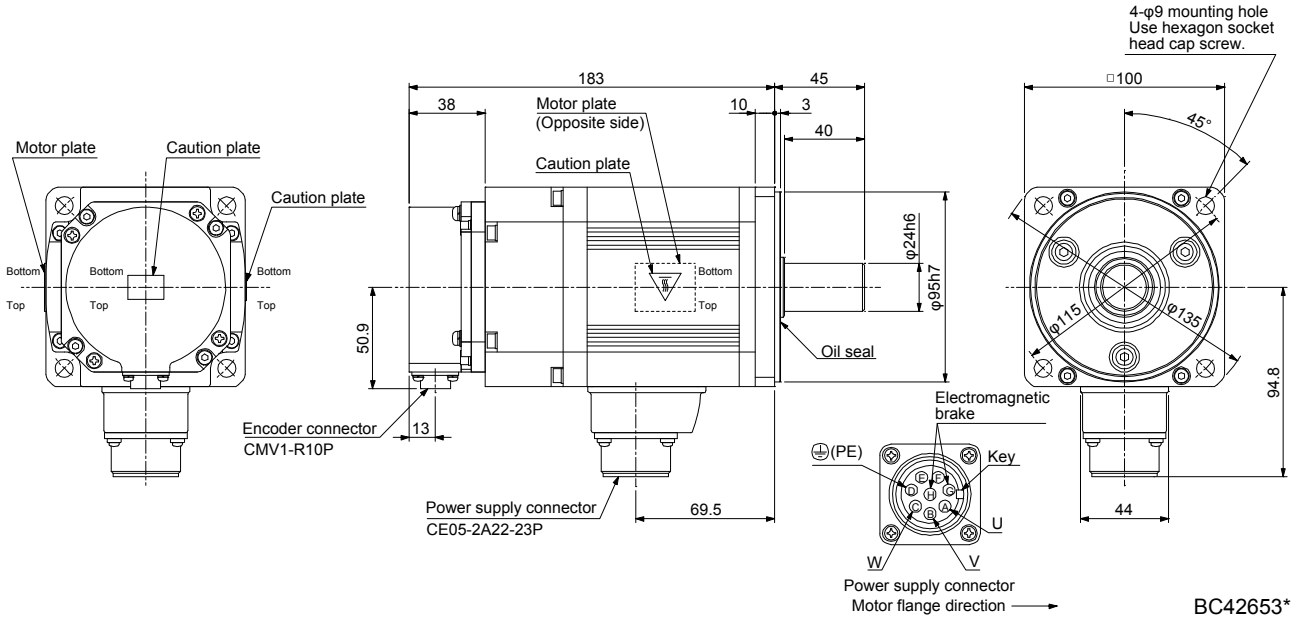

Model	Output [kW]	Brake static friction torque [N•m]	Moment of inertia J [× 10^{-4} kg•m^2]	Mass [kg]
HG-RR153B	1.5	7.0	2.25	7.0

[Unit: mm]

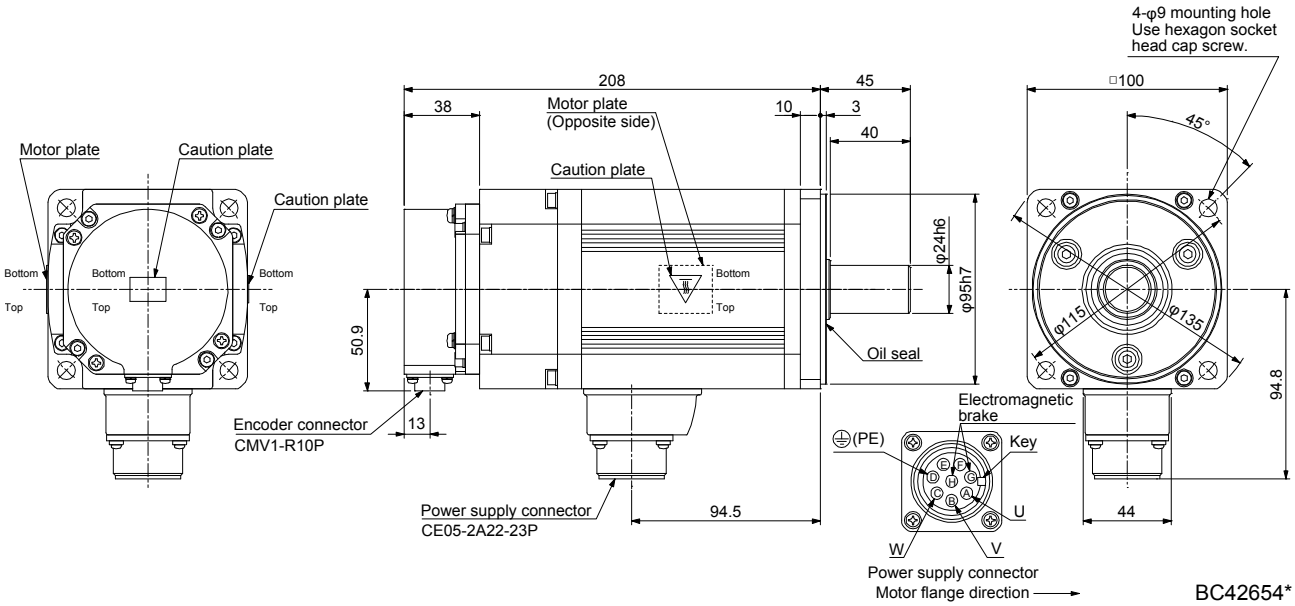

BC42654*

Model	Output [kW]	Brake static friction torque [N•m]	Moment of inertia J [× 10^{-4} kg•m^2]	Mass [kg]
HG-RR203B	2.0	7.0	2.65	8.3

[Unit: mm]

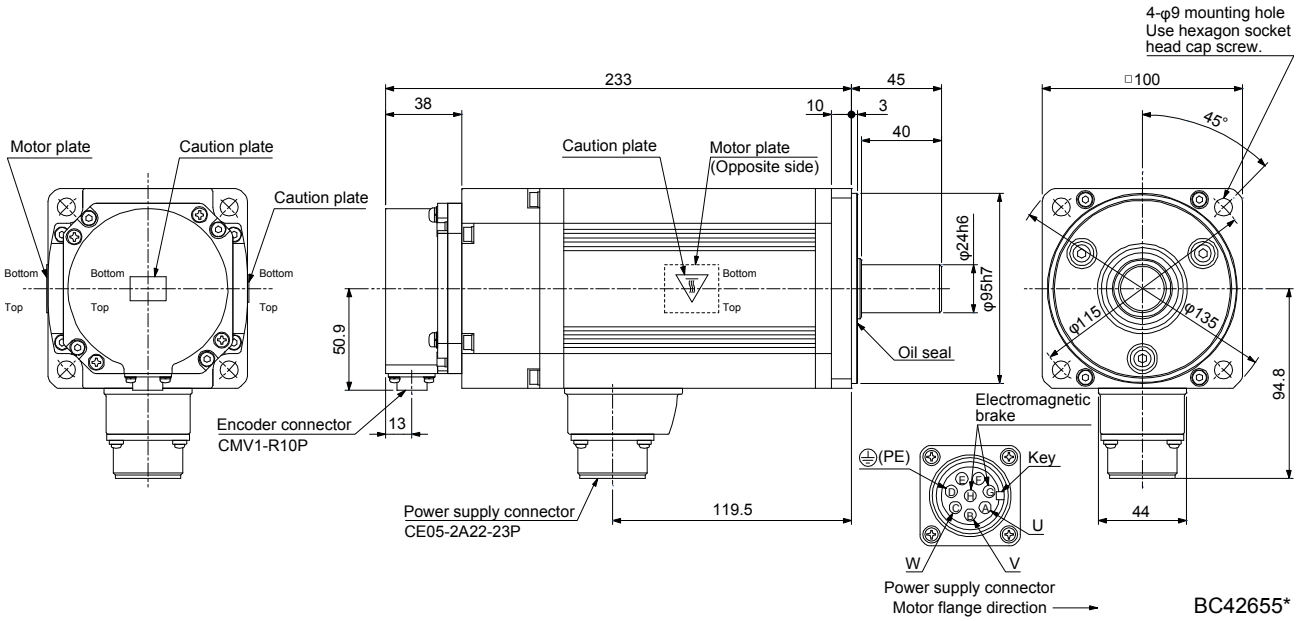

BC42655*

Model	Output [kW]	Brake static friction torque [N•m]	Moment of inertia J [× 10^{-4} kg•m^2]	Mass [kg]
HG-RR353B	3.5	17	11.8	15

[Unit: mm]

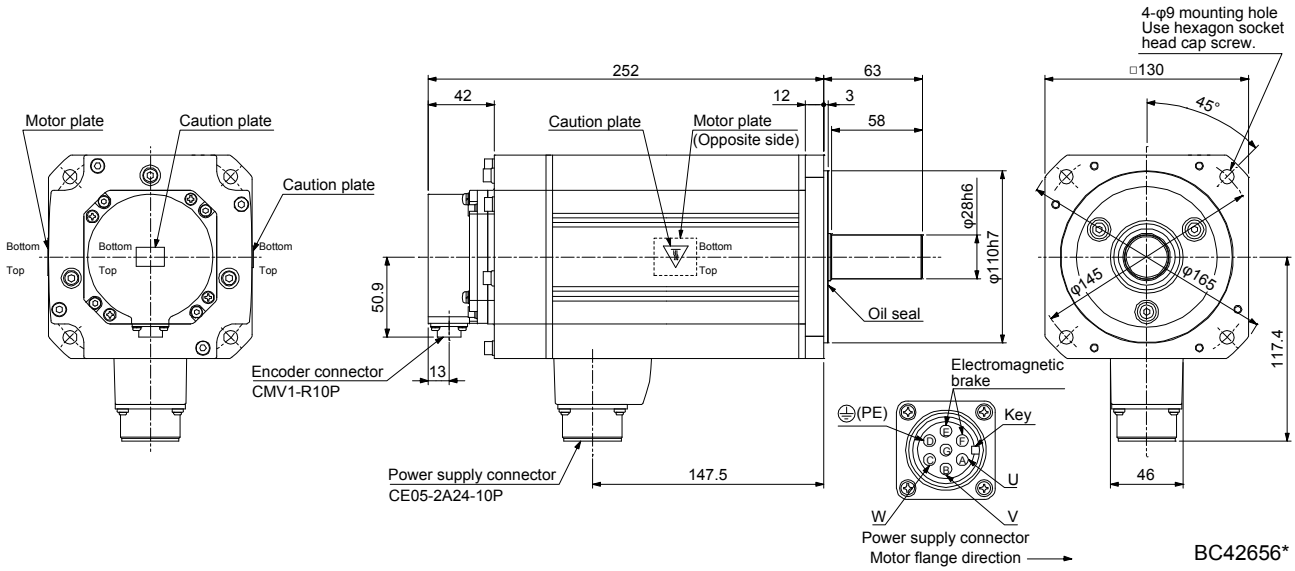

Model	Output [kW]	Brake static friction torque [N•m]	Moment of inertia J [× 10^{-4} kg•m^2]	Mass [kg]
HG-RR503B	5.0	17	15.5	21

[Unit: mm]

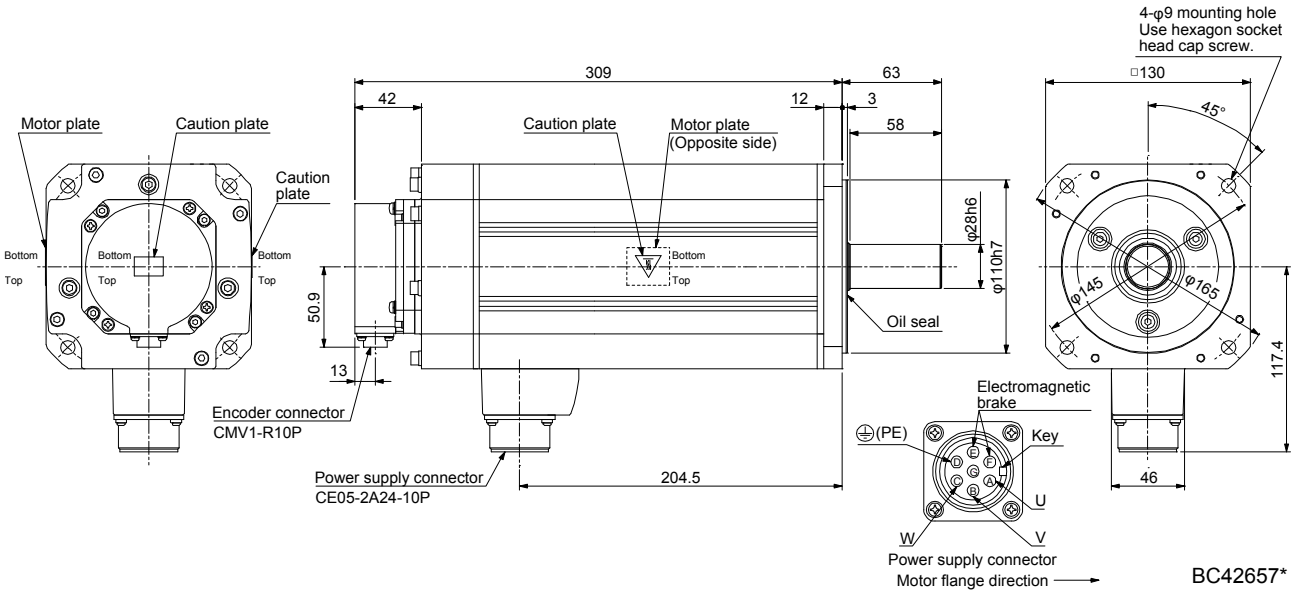

MEMO

10. HG-UR SERIES

This chapter provides information on the servo motor specifications and characteristics. When using the HG-UR series servo motor, always read the Safety Instructions in the beginning of this manual and chapters 1 to 5, in addition to this chapter.

10.1 Model designation

The following describes model designation. Not all combinations of the symbols are available.

HG-UR72BK

Series

Rated output

Symbol	Rated output [kW]
7	0.75
15	1.5
20	2
35	3.5
50	5

Rated speed
2000 [r/min]

Shaft type

Symbol	Shaft shape
None	Standard (straight shaft)
K	(Note) Keyway shaft

Electromagnetic brake

Symbol	Electromagnetic brake
None	None
B	With

Appearance

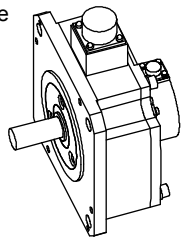

Note. Key is not included.

10.2 Combination list of servo motors and servo amplifiers

Servo motor	Servo amplifier	
	MR-J4 1-axis	MR-J4 2-axis
HG-UR72	MR-J4-70A MR-J4-70A-RJ MR-J4-70B MR-J4-70B-RJ MR-J4-70B-RJ010 MR-J4-70B-RJ020 MR-J4-70GF MR-J4-70GF-RJ	MR-J4W2-77B MR-J4W2-1010B
HG-UR152	MR-J4-200A MR-J4-200A-RJ MR-J4-200B MR-J4-200B-RJ MR-J4-200B-RJ010 MR-J4-200B-RJ020 MR-J4-200GF MR-J4-200GF-RJ	

Servo motor	Servo amplifier
HG-UR202	MR-J4-350A MR-J4-350A-RJ MR-J4-350B MR-J4-350B-RJ MR-J4-350B-RJ010 MR-J4-350B-RJ020 MR-J4-350GF MR-J4-350GF-RJ
HG-UR352	MR-J4-500A MR-J4-500A-RJ MR-J4-500B MR-J4-500B-RJ
HG-UR502	MR-J4-500B-RJ010 MR-J4-500B-RJ020 MR-J4-500GF MR-J4-500GF-RJ

10.3 Standard specifications

10.3.1 Standard specifications list

Item \ Servo motor			HG-UR 2000 r/min series (flat type/medium capacity)				
			72(B)	152(B)	202(B)	352(B)	502(B)
Power supply capacity			Refer to "Power supply equipment capacity and generated loss of servo amplifiers" in Servo Amplifier Instruction Manual.				
Continuous running duty (Note 1)	Rated output	[kW]	0.75	1.5	2.0	3.5	5.0
	Rated torque	[N•m]	3.6	7.2	9.5	16.7	23.9
Maximum torque		[N•m]	10.7	21.5	28.6	50.1	71.6
Rated speed (Note 1)		[r/min]	2000				
Maximum speed		[r/min]	3000			2500	
Instantaneous permissible speed		[r/min]	3450			2875	
Power rate at continuous rated torque	Standard	[kW/s]	12.3	23.2	23.9	36.5	49.6
	With an electromagnetic brake	[kW/s]	10.3	21.2	19.5	32.8	46.0
Rated current		[A]	5.4	9.7	14	23	28
Maximum current		[A]	16	29	42	69	84
Moment of inertia J	Standard	[× 10^{-4} kg•m^2]	10.4	22.1	38.2	76.5	115
	With an electromagnetic brake	[× 10^{-4} kg•m^2]	12.5	24.2	46.8	85.1	124
Recommended load to motor inertia ratio (Note 2)			15 times or less				
Speed/position detector			22-bit encoder common to absolute position/incremental (resolution per servo motor revolution: 4194304 pulses/rev)				
Oil seal			With				
Insulation class			155 (F)				
Structure			Totally-enclosed, natural-cooling (IP rating: IP65 (Note 3))				
Environment (Note 4)	Ambient temperature	Operation	0 ˚C to 40 ˚C (non-freezing)				
		Storage	-15 ˚C to 70 ˚C (non-freezing)				
	Ambient humidity	Operation	80 %RH or less (non-condensing)				
		Storage	90 %RH or less (non-condensing)				
	Ambience		Indoors (no direct sunlight), free from corrosive gas, flammable gas, oil mist, dust, and dirt				
	Altitude		2000 m or less above sea level (Note 8)				
	Vibration resistance (Note 5)		X, Y: 24.5 m/s^2		X: 24.5 m/s^2 Y: 49 m/s^2		
Vibration rank (Note 6)			V10				
Permissible load for the shaft (Note 7)	L	[mm]	55		65		
	Radial	[N]	637		882	1176	
	Thrust	[N]	490		784		
Mass	Standard	[kg]	8.0	11	16	20	24
	With an electromagnetic brake	[kg]	10	13	22	26	30

Note 1. When the power supply voltage drops, the output and the rated speed cannot be guaranteed.
2. If the load to motor inertia ratio exceeds the indicated value, contact your local sales office.
3. Except for the shaft-through portion. IP classifies the degrees of protection provided against the intrusion of solid objects and water in electrical enclosures.
4. In the environment where the servo motor is exposed to oil mist, oil, or water, the servo motor of the standard specifications may not be usable. Please contact your local sales office.
5. The following figure shows the vibration directions. The value is the one at the part that indicates the maximum value (normally the opposite to load-side bracket). When the servo motor stops, fretting is likely to occur at the bearing. Therefore, suppress the vibration to about half of the permissible value.

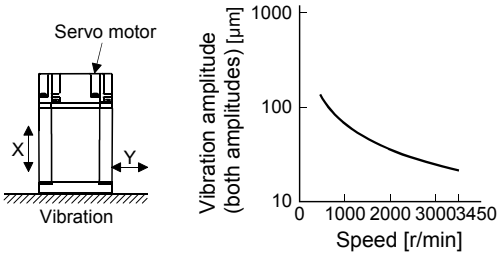

6. V10 indicates that the amplitude of a single servo motor is 10 μm or less. The following figure shows the servo motor mounting position for measurement and the measuring position.

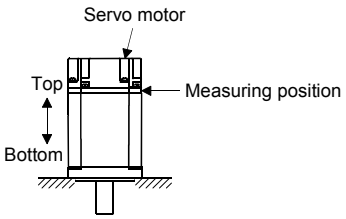

7. The following shows permissible load for the shaft. Do not subject the shaft to load greater than the value in the specifications list. The value assumes that the load is applied independently.

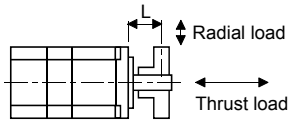

L: Distance from flange mounting surface to load center

8. Follow the restrictions in section 2.10 when using the servo amplifiers at altitude exceeding 1000 m and up to 2000 m above sea level.

10.3.2 Torque characteristics

POINT

- For the system where the unbalanced torque occurs, such as a vertical axis system, the unbalanced torque of the machine should be kept at 70% or less of the rated torque.
- When using an HG-UR152 with the 1-phase 200 V AC input, contact your local sales office.

When the power supply input of the servo amplifier is 3-phase 200 V AC or 1-phase 230 V AC, the torque characteristic is indicated by the heavy line. For the 1-phase 200 V AC power supply, part of the torque characteristic is indicated by the thin line. HG-UR72 supports 1-phase power supply input.

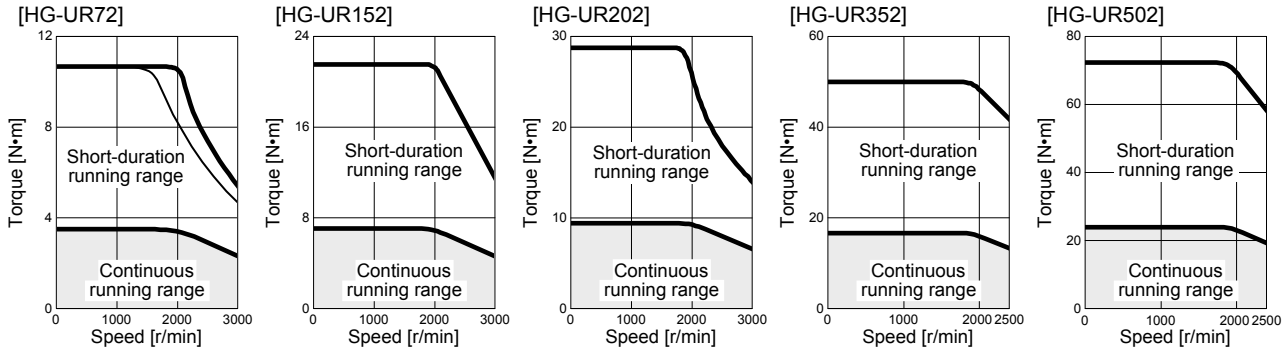

10.4 Electromagnetic brake characteristics

⚠CAUTION	●The electromagnetic brake is provided to prevent a drop at a power failure or servo alarm occurrence during vertical drive or to hold a shaft at a stop. Do not use it for normal braking (including braking at servo-lock). ●Before operating the servo motor, be sure to confirm that the electromagnetic brake operates properly. ●The operation time of the electromagnetic brake differs depending on the power supply circuit you use. Be sure to check the operation delay time with a real machine.

The characteristics of the electromagnetic brake provided for the servo motor with an electromagnetic brake are indicated below.

Item \ Servo motor		HG-UR series	
		72B/152B	202B/352B/502B
Type (Note 1)		Spring actuated type safety brake	
Rated voltage (Note 4)		24 V DC $^{0}_{-10\%}$	
Power consumption [W] at 20 °C		19	34
Coil resistance (Note 6) [Ω]		29.0	17.0
Inductance (Note 6) [H]		0.8	1.17
Brake static friction torque [N•m]		8.5	44
Release delay time (Note 2) [s]		0.04	0.1
Braking delay time (Note 2) [s]	DC off	0.03	0.03
Permissible braking work	Per braking [J]	400	4500
	Per hour [J]	4000	45000
Brake looseness at servo motor shaft (Note 5) [degrees]		0.2 to 0.6	0.2 to 0.6
Brake life (Note 3)	Number of brakings [times]	20000	20000
	Work per braking [J]	200	1000
Selection example of surge absorbers to be used (Note 7, 8)	For the suppressed voltage 125 V	TND20V-680KB	
	For the suppressed voltage 350 V	TND10V-221KB	

Note 1. There is no manual release mechanism. When it is necessary to hand-turn the servo motor shaft for machine centering, etc., use a separate 24 V DC power supply to release the brake electrically.
2. The value for initial on gap at 20 °C.
3. The brake gap will increase as the brake lining wears, but the gap is not adjustable.
The brake life indicated is the number of braking cycles after which adjustment will be required.
4. Always prepare a power supply exclusively used for the electromagnetic brake.
5. These are design values. These are not guaranteed values.
6. These are measured values. These are not guaranteed values.
7. Select the electromagnetic brake control relay properly, considering the characteristics of the electromagnetic brake and surge absorber. When you use a diode for a surge absorber, the electromagnetic braking time will be longer.
8. Manufactured by Nippon Chemi-Con Corporation.

10.5 Servo motors with special shafts

The servo motors with special shafts indicated by the symbol (K) in the table are available. K is the symbol attached to the servo motor model names.

Servo motor	Shaft shape
	Key shaft (without key)
HG-UR_(B)K	K

Servo motor	Variable dimensions							
	S	R	Q	W	QK	QL	U	r
HG-UR72(B)K	22h6	55	50	$6^{0}_{-0.036}$	42	3	$3.5^{+0.1}_{0}$	3
HG-UR152(B)K	28h6	55	50	$8^{0}_{-0.036}$	40	3	$4^{+0.2}_{0}$	4
HG-UR202(B)K HG-UR352(B)K HG-UR502(B)K	$35^{+0.010}_{0}$	65	60	$10^{0}_{-0.036}$	50	5	$5^{+0.2}_{0}$	5

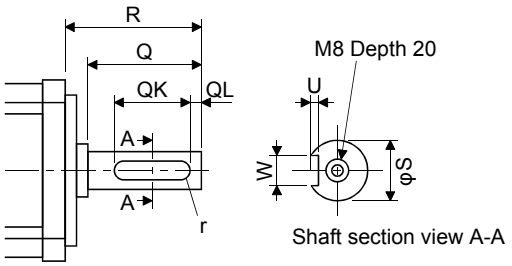

10.6 Oil seal

The oil seal prevents the entry of oil into the servo motor.
Install the servo motor horizontally, and set the oil level in the gear box to be lower than the oil seal lip always.

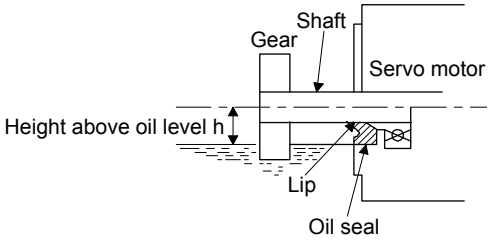

Servo motor	Oil level h [mm]
HG-UR72(B) HG-UR152(B)	20
HG-UR202(B) HG-UR352(B) HG-UR502(B)	25

10.7 Dimensions

Moment of inertia on the table is the value calculated by converting the total value of moment of inertia for servo motor and electromagnetic brake with servo motor shaft.
The dimensions without tolerances are general tolerance.

10.7.1 Standard (without an electromagnetic brake)

Model	Output [kW]	Moment of inertia J [× 10^{-4} kg•m^2]	Mass [kg]
HG-UR72	0.75	10.4	8.0

[Unit: mm]

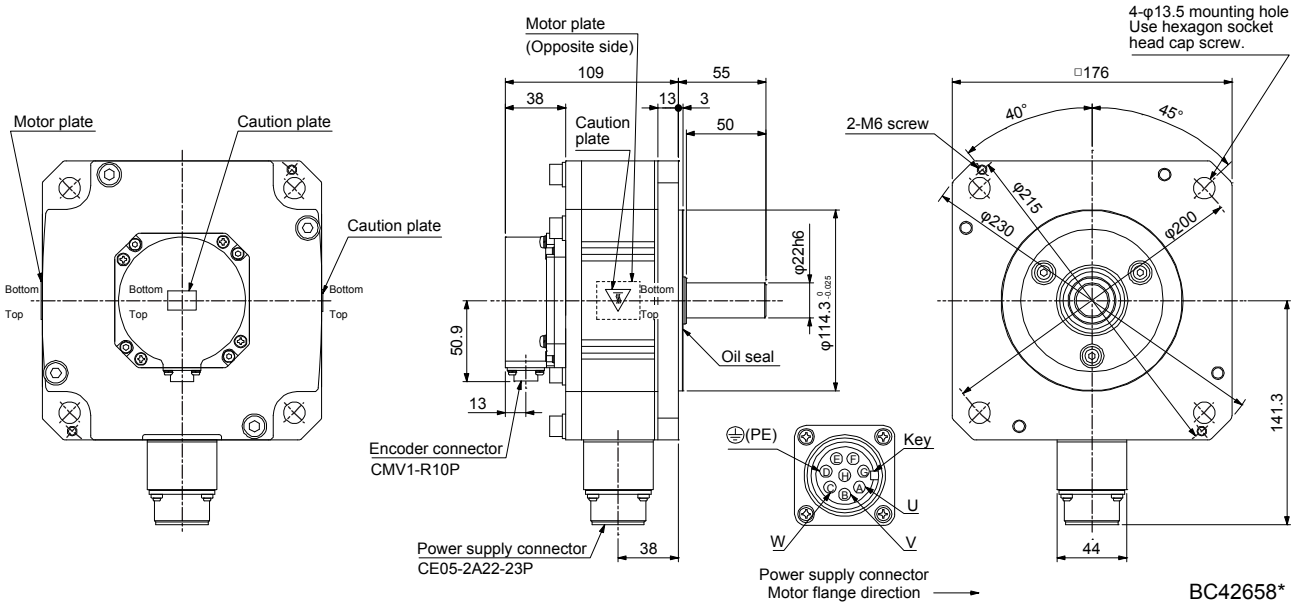

Model	Output [kW]	Moment of inertia J [× 10^{-4} kg•m^2]	Mass [kg]
HG-UR152	1.5	22.1	11

[Unit: mm]

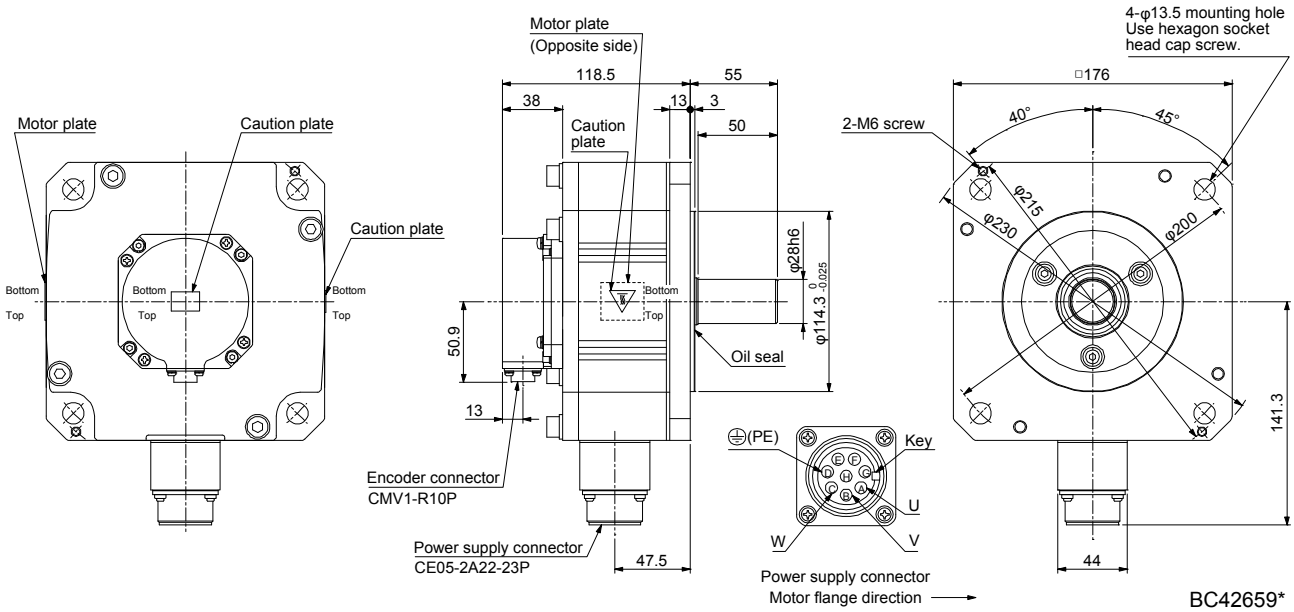

Model	Output [kW]	Moment of inertia J [× 10^{-4} kg•m^2]	Mass [kg]
HG-UR202	2.0	38.2	16

[Unit: mm]

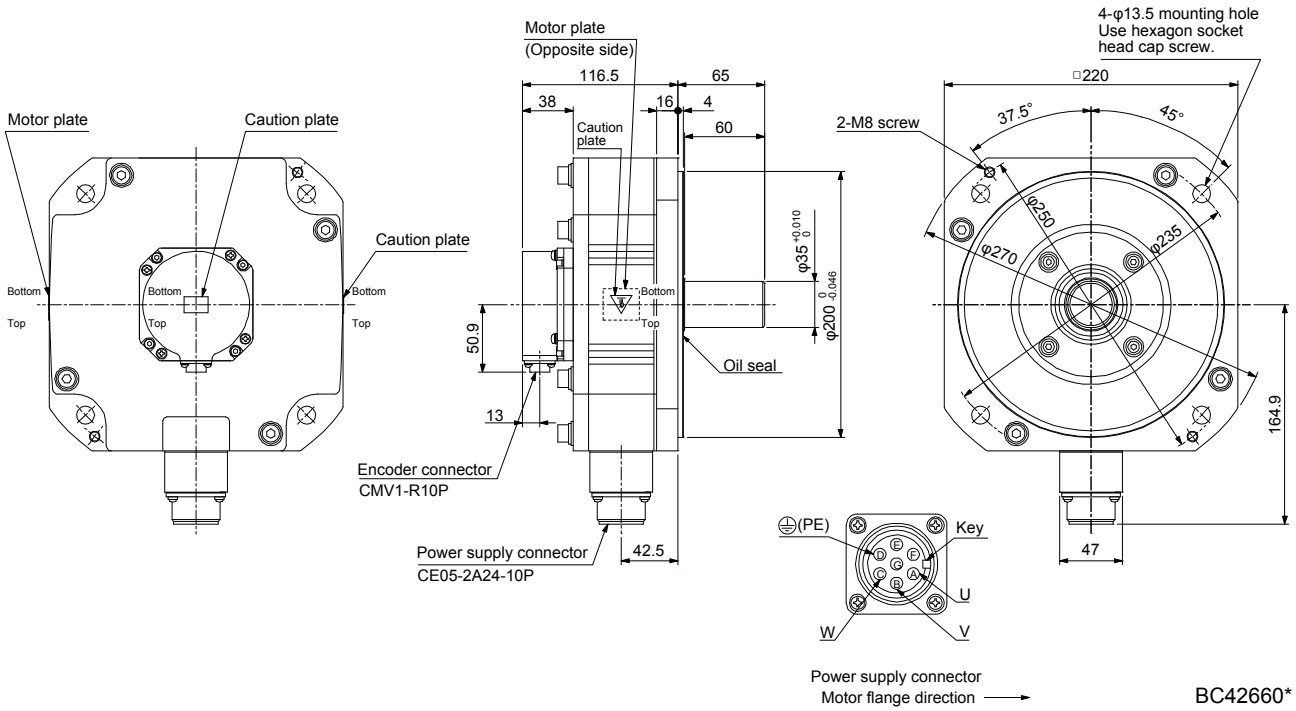

BC42660*

Model	Output [kW]	Moment of inertia J [× 10^{-4} kg•m^2]	Mass [kg]
HG-UR352	3.5	76.5	20

[Unit: mm]

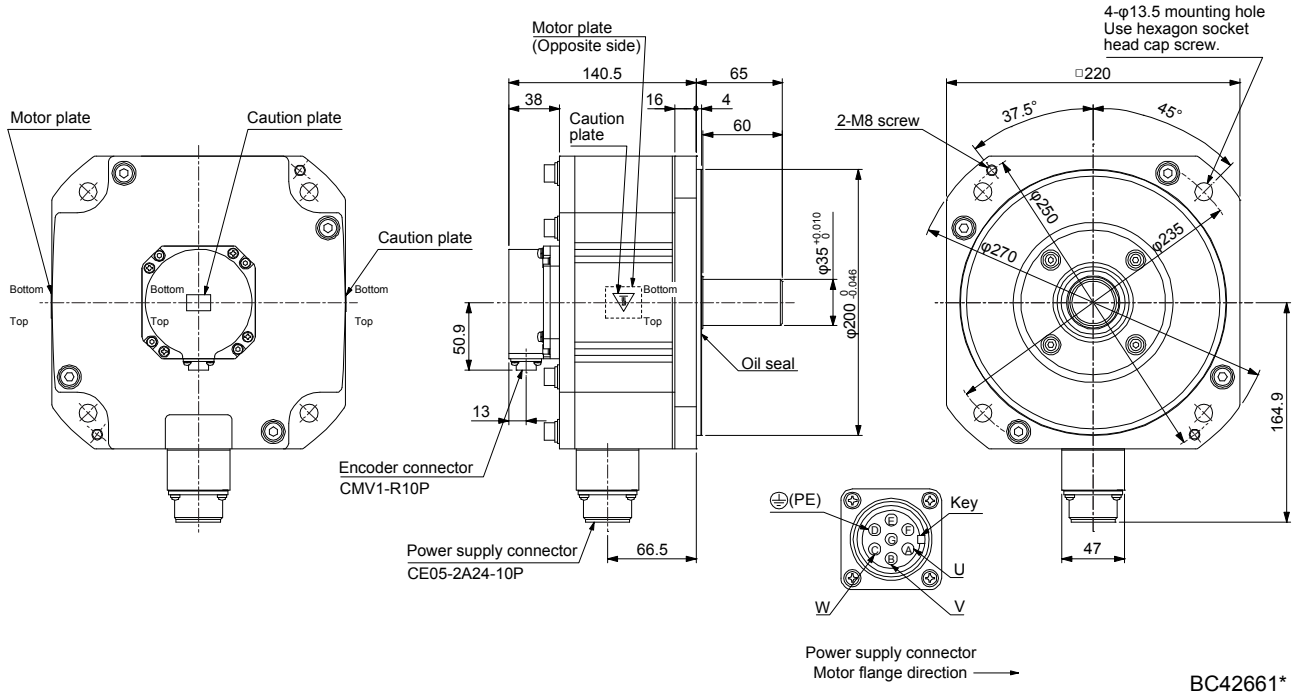

BC42661*

Model	Output [kW]	Moment of inertia J [× 10^{-4} kg•m^2]	Mass [kg]
HG-UR502	5.0	115	24

[Unit: mm]

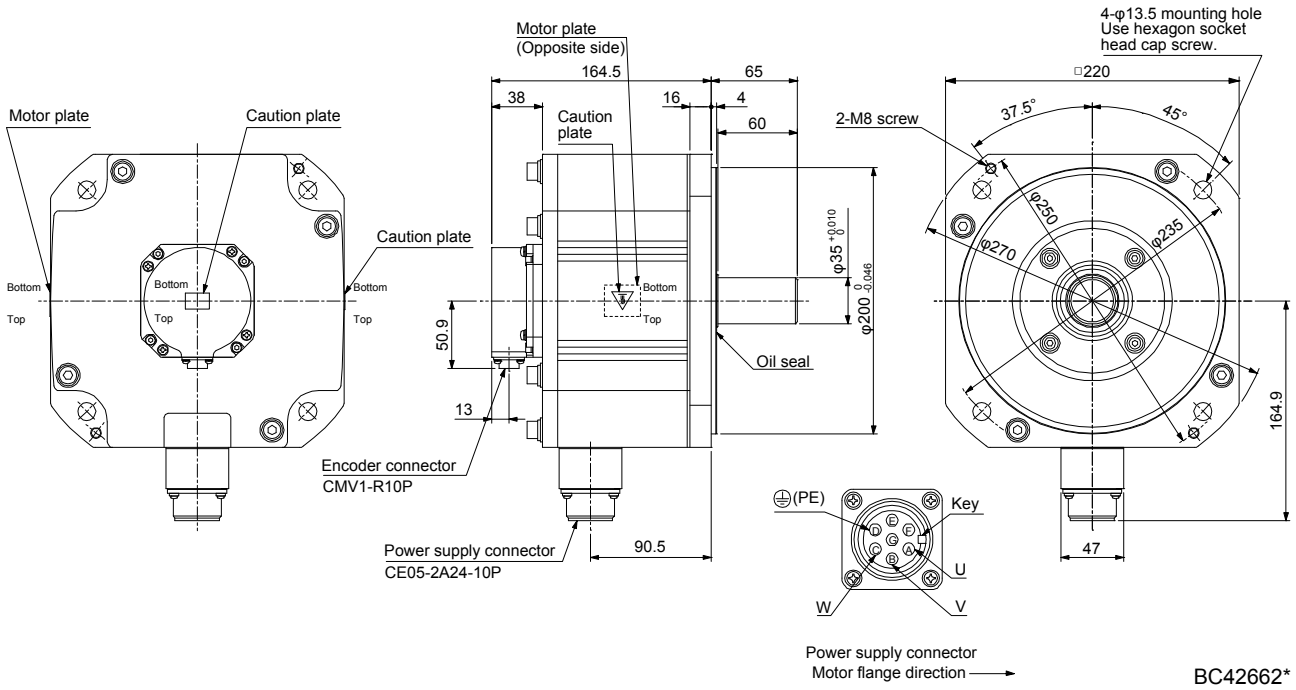

BC42662*

10.7.2 With an electromagnetic brake

Model	Output [kW]	Brake static friction torque [N•m]	Moment of inertia J [× 10^{-4} kg•m^2]	Mass [kg]
HG-UR72B	0.75	8.5	12.5	10

[Unit: mm]

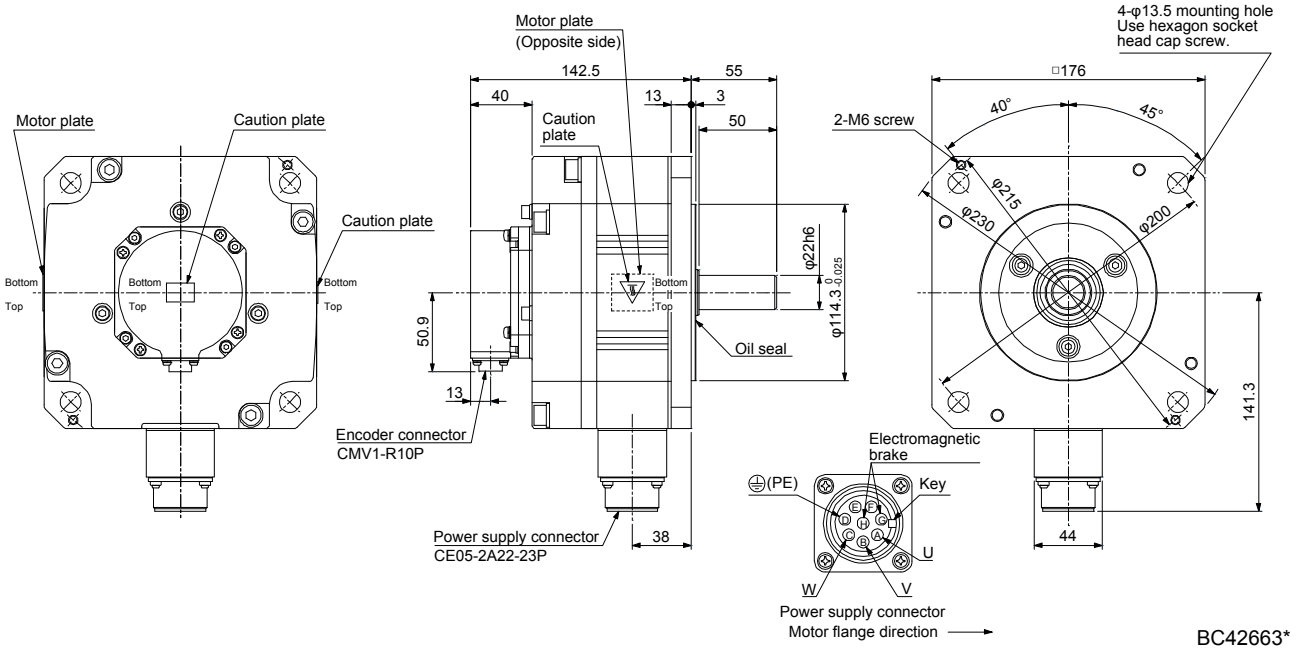

BC42663*

Model	Output [kW]	Brake static friction torque [N•m]	Moment of inertia J [× 10^{-4} kg•m^2]	Mass [kg]
HG-UR152B	1.5	8.5	24.2	13

[Unit: mm]

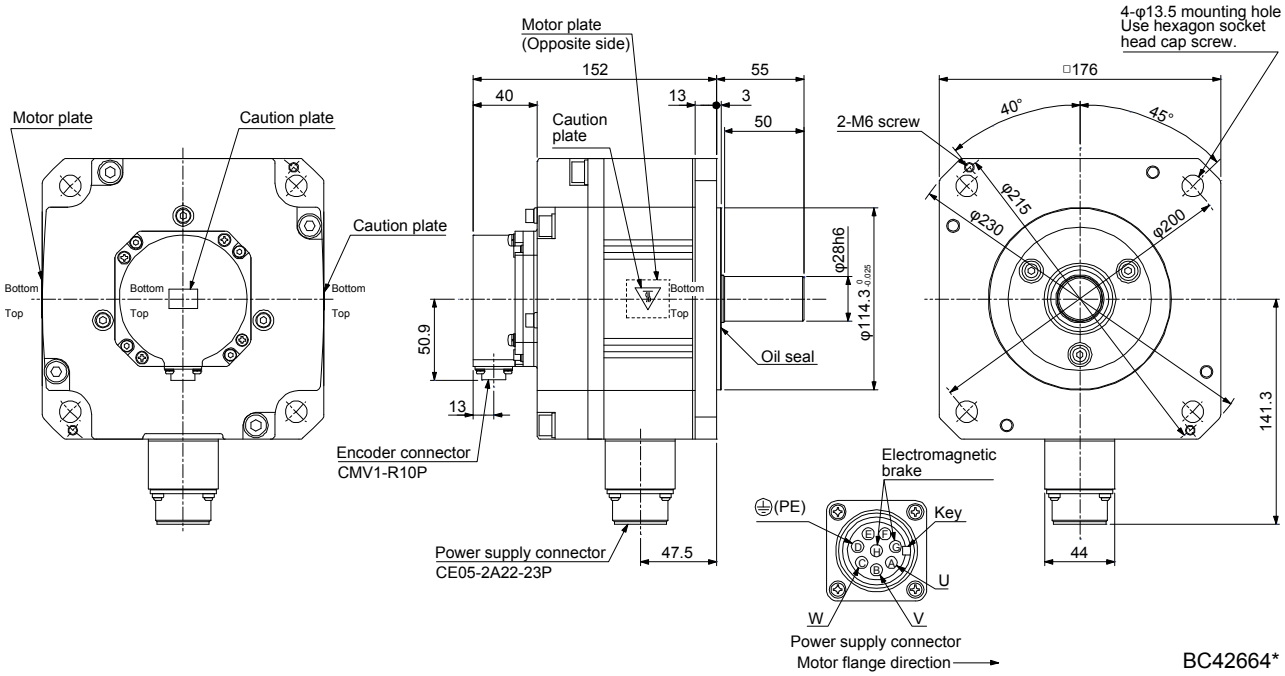

Model	Output [kW]	Brake static friction torque [N•m]	Moment of inertia J [× 10^{-4} kg•m^2]	Mass [kg]
HG-UR202B	2.0	44	46.8	22

[Unit: mm]

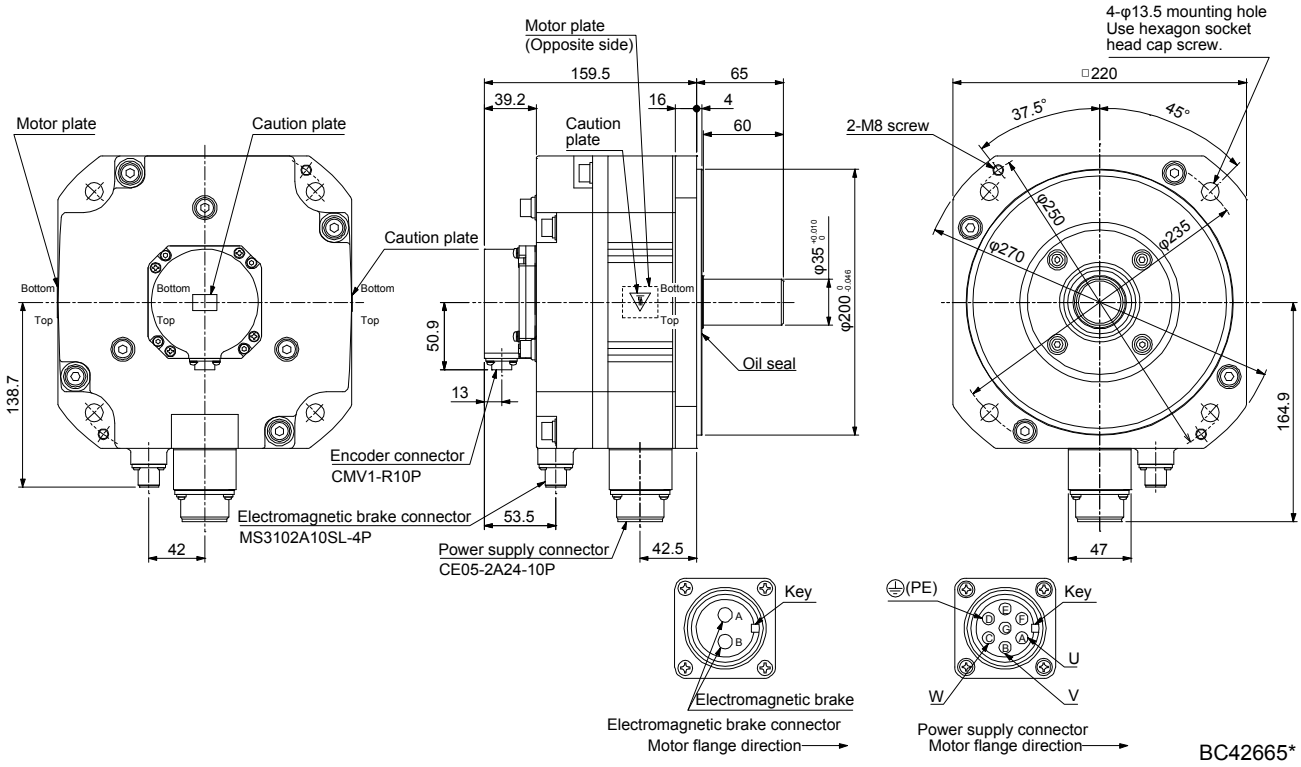

Model	Output [kW]	Brake static friction torque [N•m]	Moment of inertia J [× 10^{-4} kg•m^2]	Mass [kg]
HG-UR352B	3.5	44	85.1	26

[Unit: mm]

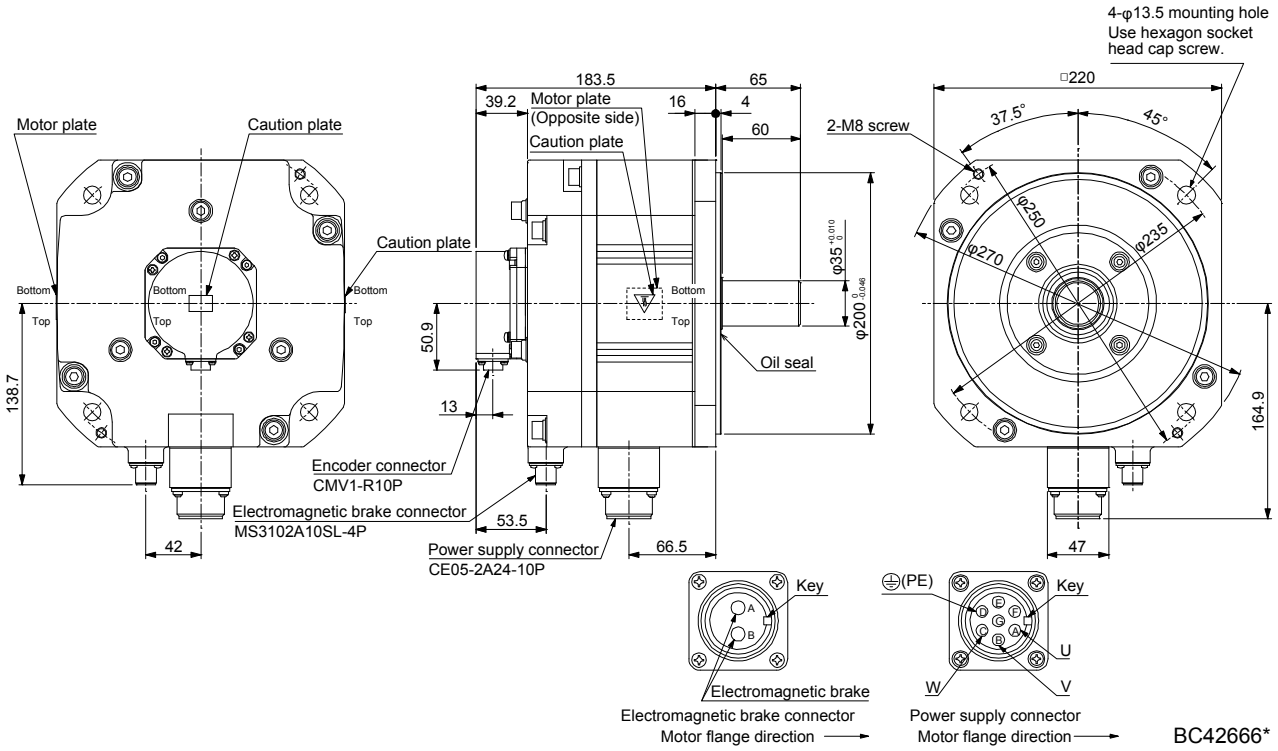

Model	Output [kW]	Brake static friction torque [N•m]	Moment of inertia J [× 10^{-4} kg•m^2]	Mass [kg]
HG-UR502B	5.0	44	124	30

[Unit: mm]

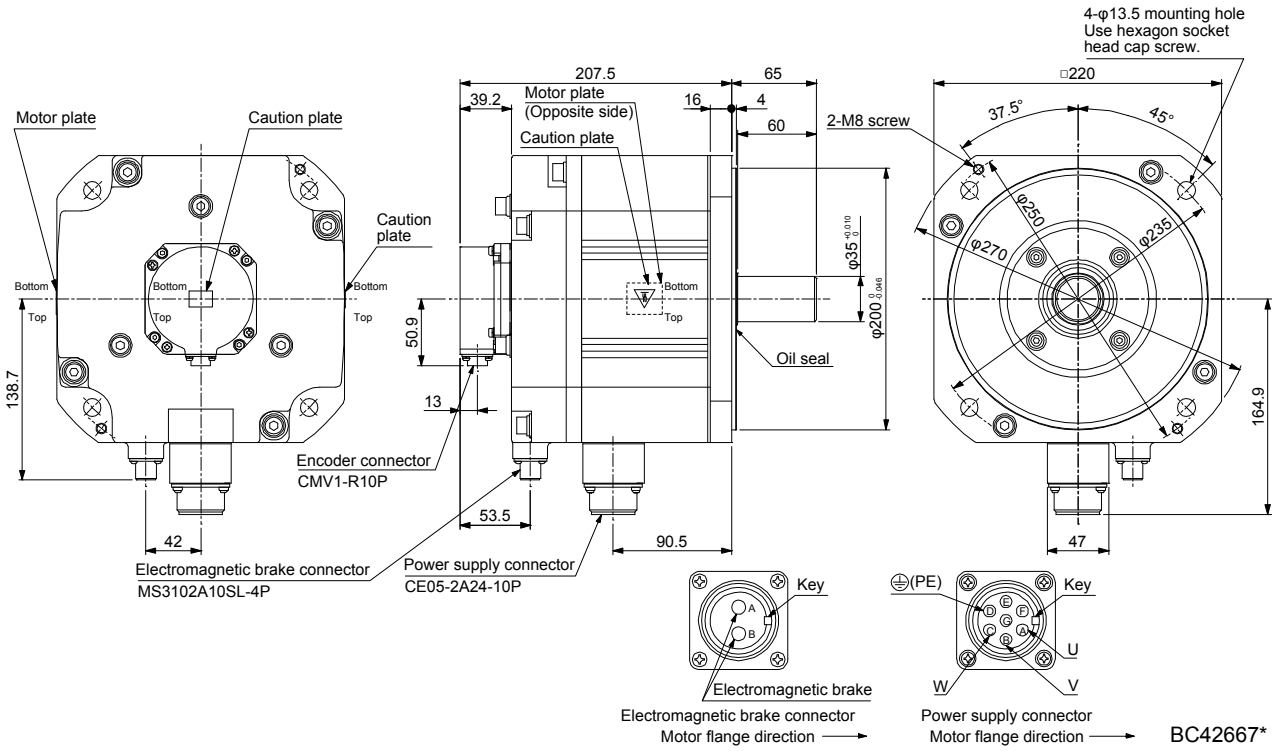

MEMO

11. HG-AK SERIES

POINT
●For combination with the MR-J3W-0303BN6 servo amplifier, refer to "Servo Motor Instruction Manual (Vol. 2)" (SH(NA)030041).

This chapter provides information on the servo motor specifications and characteristics. When using the HG-AK series servo motor, always read the Safety Instructions in the beginning of this manual and chapters 1 to 5, in addition to this chapter.

11.1 Model designation

The following describes model designation. Not all combinations of the symbols are available.

HG－AK 0 1 3 6 B D－S 1 0 0

Series

Special specifications

Symbol	Special specifications
None	Standard
-S100	Encoder cable vertical lead

Shaft type

Symbol	Shaft shape
None	Standard (Straight shaft)
D	D-cut shaft

Electromagnetic brake

Symbol	Electromagnetic brake
None	None
B	With

Main circuit power supply voltage
48 V DC/24 V DC

Rated speed
3000 [r/min]

Rated output

Symbol	Rated output [W]
01	10
02	20
03	30

Appearance

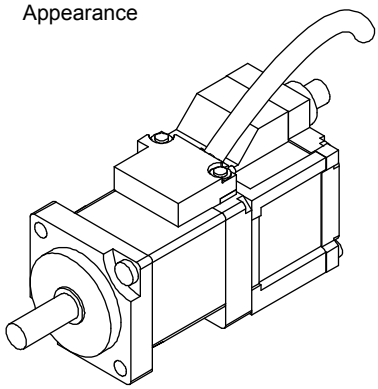

11.2 Combination list of servo motors and servo amplifiers

Servo motor	Servo amplifier
HG-AK0136	MR-J4-03A6(-RJ) MR-J4W2-0303B6
HG-AK0236	
HG-AK0336	

11.3 Standard specifications

11.3.1 Standard specifications list

Item \ Servo motor			HG-AK series		
			0136(B)	0236(B)	0336(B)
Power supply capacity			Refer to "Power supply equipment capacity and generated loss of servo amplifiers" of each servo amplifier instruction manual.		
Continuous running duty (Note 1)	Rated output	[W]	10	20	30
	Rated torque	[N•m]	0.032	0.064	0.095
Maximum torque		[N•m]	0.095	0.191	0.286
Rated speed (Note 1)		[r/min]	3000		
Maximum speed	48 V DC	[r/min]	6000		
	24 V DC	[r/min]	6000		5000
Instantaneous permissible speed	48 V DC	[r/min]	6900		
	24 V DC	[r/min]	6900		5750
Power rate at continuous rated torque	Standard	[kW/s]	3.54	9.01	14.95
	With electromagnetic brake	[kW/s]	2.41	6.99	12.32
Rated current		[A]	2.1	2.1	2.2
Maximum current		[A]	6.3	6.3	6.6
Moment of inertia J	Standard	[J × 10^{-4} kg•m^2]	0.0029	0.0045	0.0061
	With electromagnetic brake	[J × 10^{-4} kg•m^2]	0.0042	0.0058	0.0074
Recommended load to motor inertia ratio (Note 2)			30 times or less		
Speed/position detector			18-bit encoder common to absolute position/incremental systems (resolution per servo motor revolution: 262144 pulses/rev)		
Oil seal			None		
Insulation class			130 (B)		
Structure			Totally enclosed, natural cooling (IP rating: IP55 (Note 3))		
Environment (Note 4)	Ambient temperature	Operation	0 ˚C to 40 ˚C (non-freezing)		
		Storage	-15 ˚C to 70 ˚C (non-freezing)		
	Ambient humidity	Operation	80 %RH or less (non-condensing)		
		Storage	90 %RH or less (non-condensing)		
	Ambience		Indoors (no direct sunlight), free from corrosive gas, flammable gas, oil mist, dust, and dirt		
	Altitude		1000 m or less above sea level		
	Vibration resistance (Note 5)		X, Y: 49 m/s^2		
Vibration rank (Note 6)			V10		
Permissible load for the shaft (Note 7)	L	[mm]	16		
	Radial	[N]	34	44	49
	Thrust	[N]	14		
Mass	Standard	[kg]	0.12	0.14	0.16
	With electromagnetic brake	[kg]	0.22	0.24	0.26

Note 1. When the power supply voltage drops, the output and the rated speed cannot be guaranteed.
2. If the load to motor inertia ratio exceeds the indicated value, contact your local sales office.
3. The shaft-through portion, connector portion, and power supply cable outlet portion are excluded. IP classifies the degrees of protection provided against the intrusion of solid objects and water in electrical enclosures.
4. In the environment where the servo motor is exposed to oil mist, oil, or water, the servo motor of the standard specifications may not be usable. Please contact your local sales office.

5. The following figure shows the vibration directions. The value is the one at the part that indicates the maximum value (normally the opposite to load-side bracket). When the servo motor stops, fretting is likely to occur at the bearing. Therefore, suppress the vibration to about half of the permissible value.

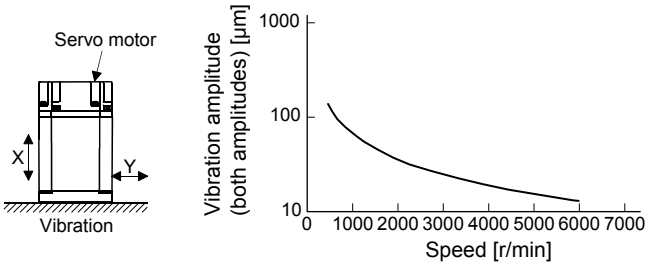

6. V10 indicates that the amplitude of a single servo motor is 10 μm or less. The following figure shows the servo motor mounting position for measurement and the measuring position.

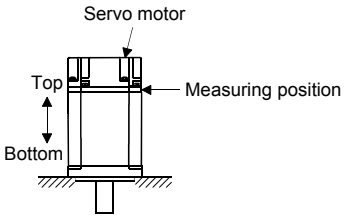

7. The following shows permissible load for the shaft. Do not subject the shaft to load greater than the value in the specifications list. The value assumes that the load is applied independently.

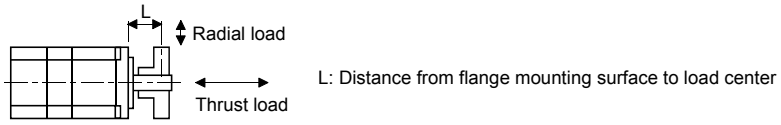

11.3.2 Torque characteristics

POINT

- For the system where the unbalanced torque occurs, such as a vertical axis system, the unbalanced torque of the machine should be kept at 70% or less of the rated torque.
- For the torque characteristics, MR-J4W03PWCBL5M-H or MR-J4W03PWBRCBL5M-H was used for connecting servo amplifiers and servo motors. When an optional cable longer than 5 m is used, the short-duration running range in the torque characteristics may be lower because of voltage drop.
- When the main circuit power supply input of the servo amplifier is 24 V DC, the maximum speed of HG-AK0336 will be 5000 r/min.

When the main circuit power supply input of the servo amplifier is 48 V DC, the torque characteristic is indicated by the heavy line. For the 24 V DC power supply, part of the torque characteristic is indicated by the thin line.

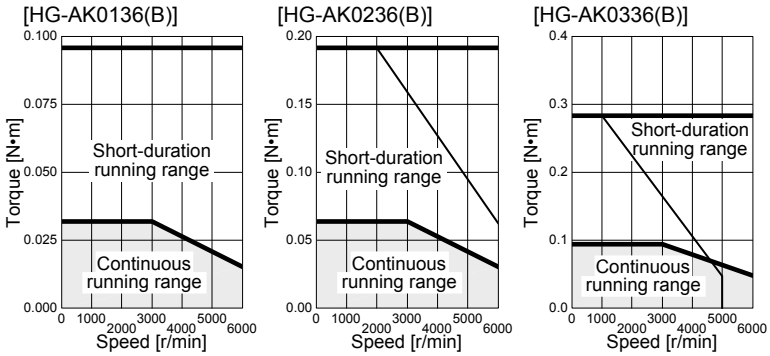

11.4 Electromagnetic brake characteristics

⚠CAUTION	●The electromagnetic brake is provided to prevent a drop at a power failure or servo alarm occurrence during vertical drive or to hold a shaft at a stop. Do not use it for normal braking (including braking at servo-lock). ●Before operating the servo motor, be sure to confirm that the electromagnetic brake operates properly. ●The operation time of the electromagnetic brake varies depending on the power supply circuit you use. Be sure to check the operation delay time with a real machine.

The characteristics of the electromagnetic brake provided for the servo motor with an electromagnetic brake are indicated below.

Item \ Servo motor		HG-AK series		
		0136B	0236B	0336B
Type (Note 1)		Spring-loaded safety brake		
Rated voltage (Note 4)		24 V DC $^{0}_{-10\%}$		
Power consumption [W] at20 °C		1.8		
Coil resistance (Note 6) [Ω]		320		
Inductance (Note 6) [H]		1.6		
Brake static friction torque [N•m]		0.095		
Release delay time (Note 2) [s]		0.03		
Braking delay time (Note 2) [s]	DC off	0.01		
Permissible braking work	Per braking [J]	4.6		
	Per hour [J]	46		
Brake looseness at servo motor shaft (Note 5) [degree]		0.1 to 2.5		
Brake life (Note 3)	Number of brakings [times]	20000		
	Work per braking [J]	1		
Selection example of surge absorbers to be used (Note 7, 8)	For the suppressed voltage 125 V	TND20V-680KB		
	For the suppressed voltage 350 V	TND10V-221KB		

Note 1. There is no manual release mechanism. When it is necessary to hand-turn the servo motor shaft for machine centering, etc., use a separate 24 V DC power supply to release the brake electrically.
2. The value for initial on gap at 20 °C.
3. The brake gap will increase as the brake lining wears, but the gap is not adjustable. The brake life is defined as the number of brakings until adjustment will be required.
4. Always prepare a power supply exclusively used for the electromagnetic brake.
5. These are design values. These are not guaranteed values.
6. These are measured values. These are not guaranteed values.
7. Select the electromagnetic brake control relay properly, considering the characteristics of the electromagnetic brake and surge absorber. When you use a diode for a surge absorber, the electromagnetic braking time will be longer.
8. Manufactured by Nippon Chemi-Con Corporation.

11.5 Servo motors with special shafts

The servo motors with special shafts indicated by the symbols (D) in the table are available. D is the symbol attached to the servo motor model names.

Servo motor	Shaft shape
	D cut shaft
HG-AK_(B)	D

[Unit: mm]

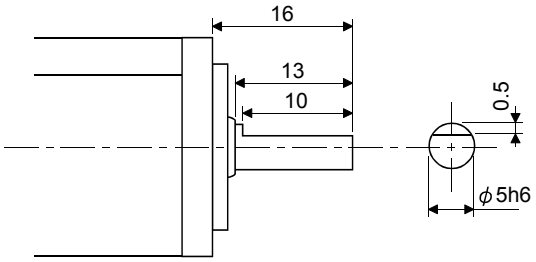

11.6 Dimensions

Moment of inertia on the table is the value calculated by converting the total value of moment of inertia for servo motor and electromagnetic brake to servo motor shaft.
The dimensions without tolerances are general tolerance.

11.6.1 Standard (without an electromagnetic brake)

Model	Output [W]	Moment of inertia J [× 10^{-4} kg•m^2]	Mass [kg]
HG-AK0136	10	0.0029	0.12

[Unit: mm]

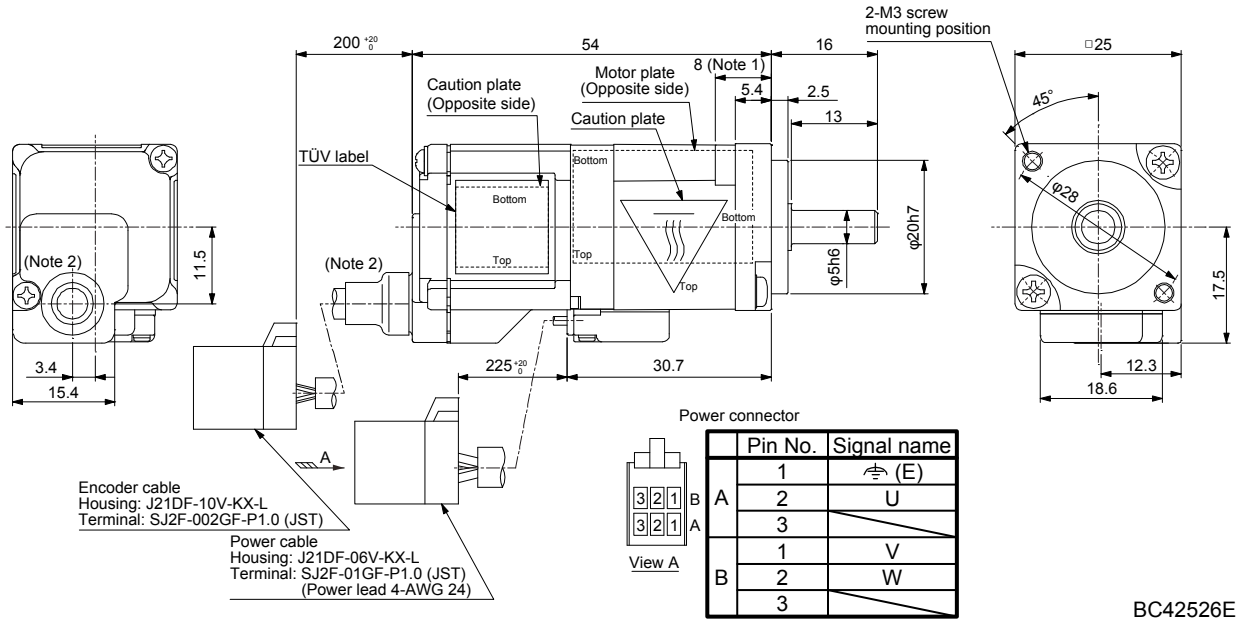

	Pin No.	Signal name
A	1	⏚ (E)
	2	U
	3	
B	1	V
	2	W
	3	

Note 1. The length of mounting screw should be within this.
2. The encoder cable outlet portion has been changed from the April 2013 production of the motors.

Model	Output [W]	Moment of inertia J [× 10^{-4} kg•m^2]	Mass [kg]
HG-AK0136-S100	10	0.0029	0.12

[Unit: mm]

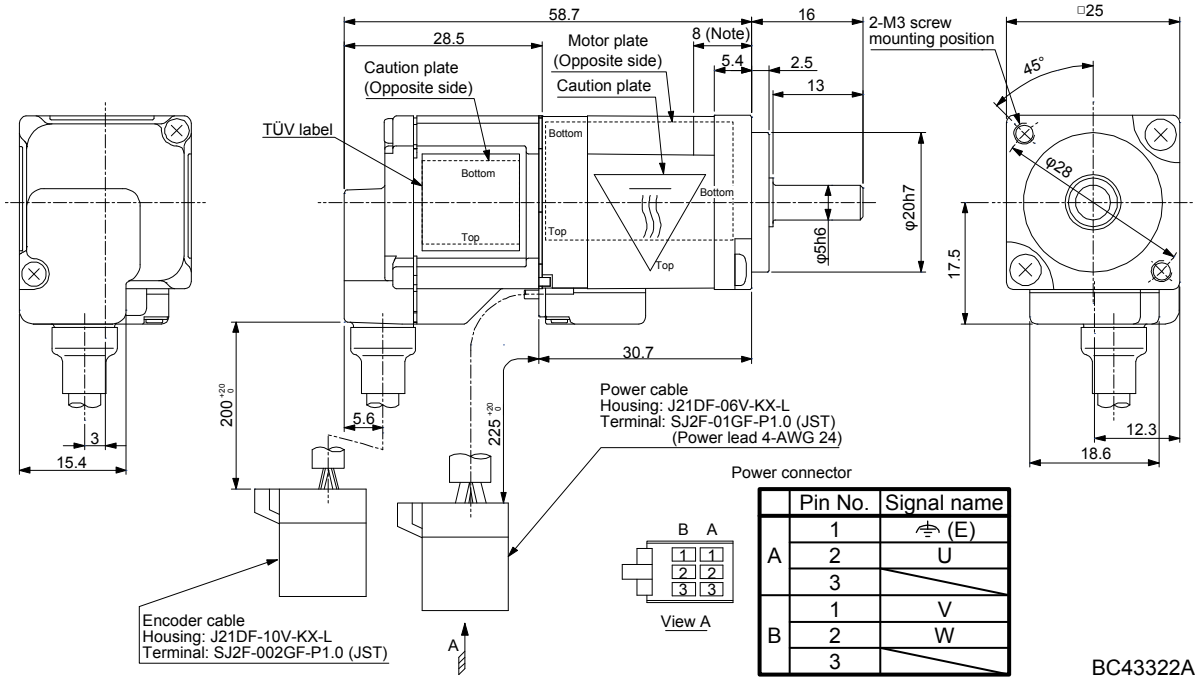

	Pin No.	Signal name
A	1	⏚ (E)
	2	U
	3	
B	1	V
	2	W
	3	

Note. The length of mounting screw should be within this.

Model	Output [W]	Moment of inertia J [× 10^{-4} kg•m^2]	Mass [kg]
HG-AK0236	20	0.0045	0.14

[Unit: mm]

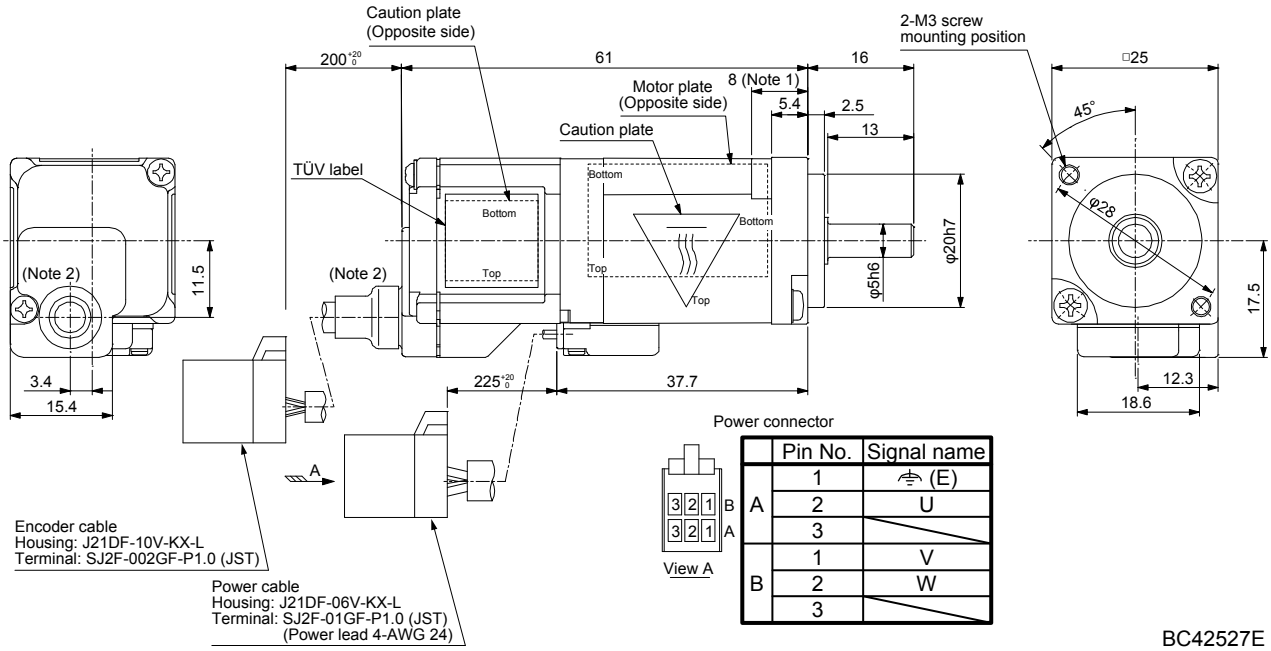

	Pin No.	Signal name
A	1	⏚ (E)
	2	U
	3	
B	1	V
	2	W
	3	

Note 1. The length of mounting screw should be within this.

2. The encoder cable outlet portion has been changed from the April 2013 production of the motors.

Model	Output [W]	Moment of inertia J [× 10^{-4} kg•m^2]	Mass [kg]
HG-AK0236-S100	20	0.0045	0.14

[Unit: mm]

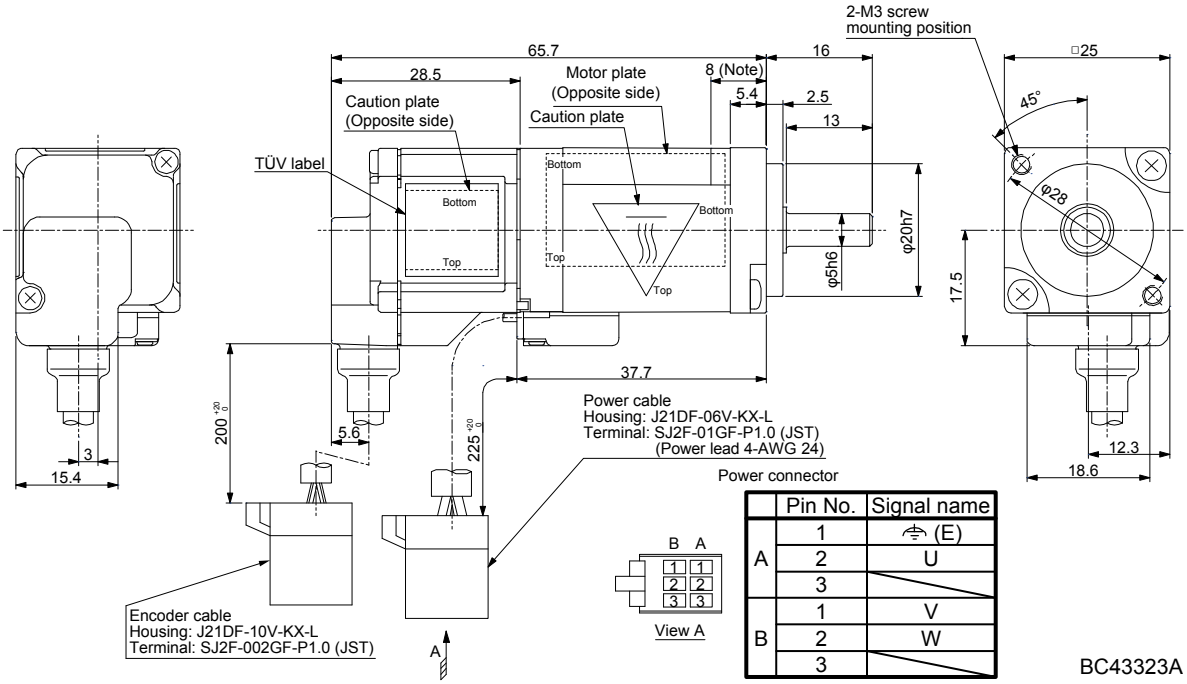

	Pin No.	Signal name
A	1	⏚ (E)
	2	U
	3	
B	1	V
	2	W
	3	

Note. The length of mounting screw should be within this.

Model	Output [W]	Moment of inertia J [× 10^{-4} kg•m^2]	Mass [kg]
HG-AK0336	30	0.0061	0.16

[Unit: mm]

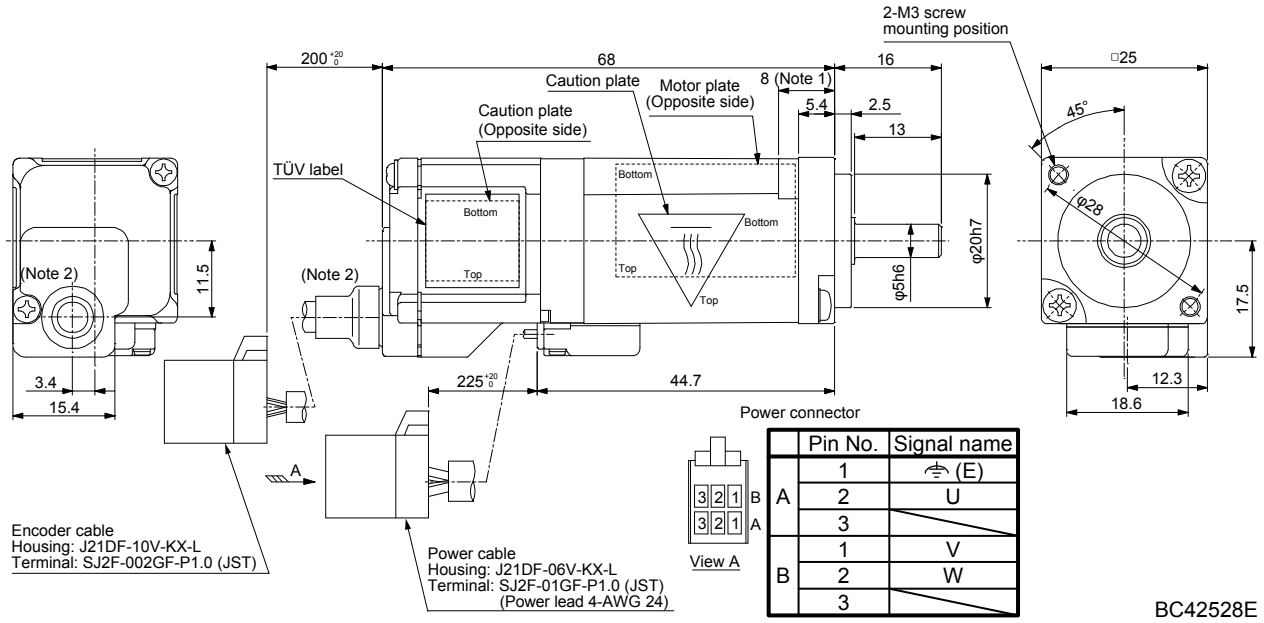

	Pin No.	Signal name
A	1	⏚ (E)
	2	U
	3	
B	1	V
	2	W
	3	

BC42528E

Note 1. The length of mounting screw should be within this.
2. The encoder cable outlet portion has been changed from the April 2013 production of the motors.

Model	Output [W]	Moment of inertia J [× 10^{-4} kg•m^2]	Mass [kg]
HG-AK0336-S100	30	0.0061	0.16

[Unit: mm]

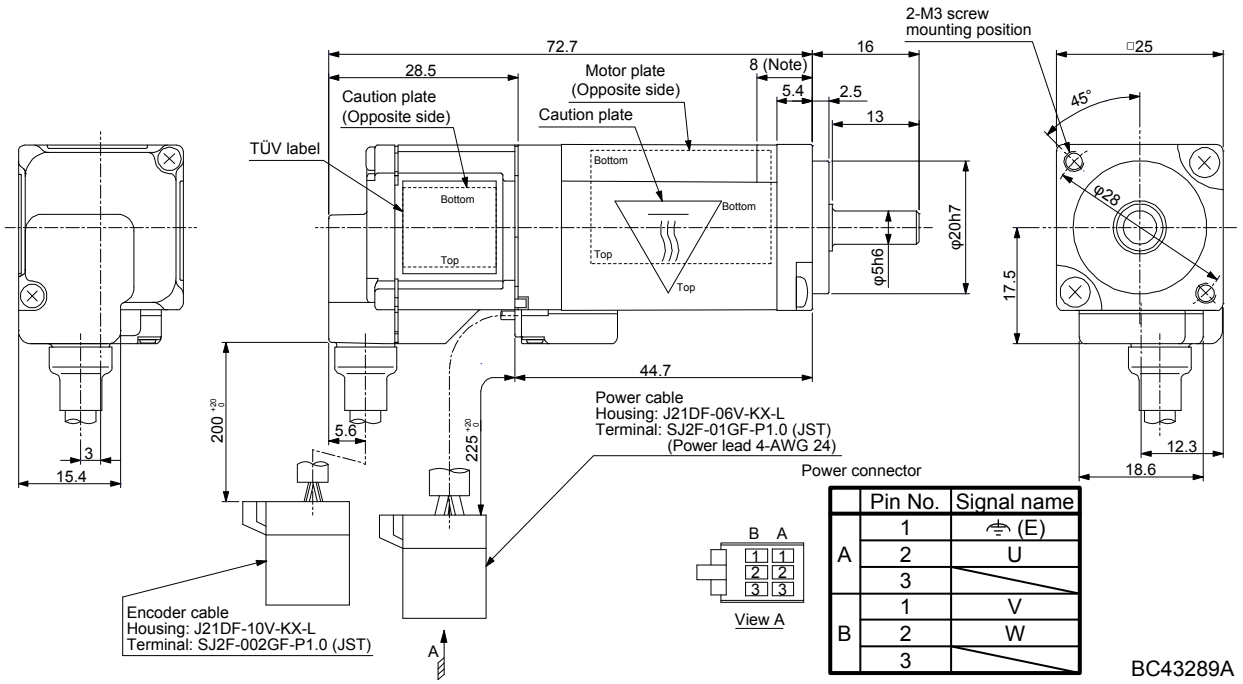

	Pin No.	Signal name
A	1	⏚ (E)
	2	U
	3	
B	1	V
	2	W
	3	

BC43289A

Note. The length of mounting screw should be within this.

11.6.2 With an electromagnetic brake

Model	Output [W]	Brake static friction torque [N•m]	Moment of inertia J [× 10^{-4} kg•m^2]	Mass [kg]
HG-AK0136B	10	0.095	0.0042	0.22

[Unit: mm]

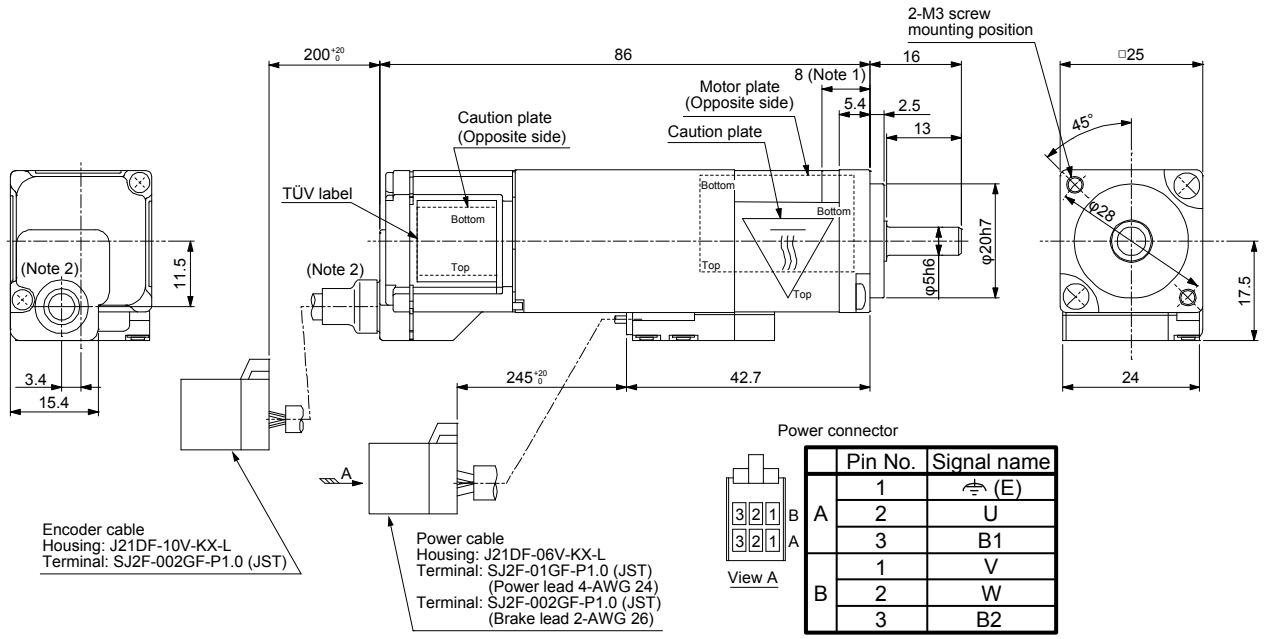

	Pin No.	Signal name
A	1	⏚ (E)
	2	U
	3	B1
B	1	V
	2	W
	3	B2

BC42542E

Note 1. The length of mounting screw should be within this.
2. The encoder cable outlet portion has been changed from the April 2013 production of the motors.

Model	Output [W]	Brake static friction torque [N•m]	Moment of inertia J [× 10^{-4} kg•m^2]	Mass [kg]
HG-AK0136B-S100	10	0.095	0.0042	0.22

[Unit: mm]

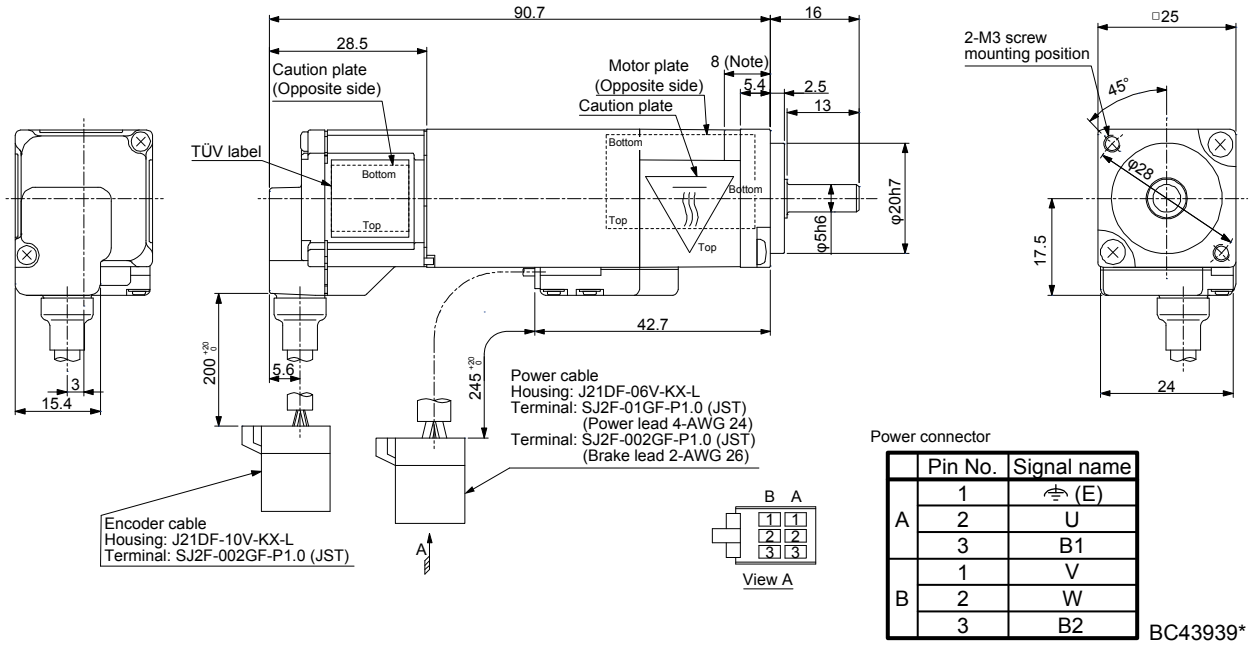

Power connector

	Pin No.	Signal name
A	1	⏚ (E)
	2	U
	3	B1
B	1	V
	2	W
	3	B2

BC43939*

Note. The length of mounting screw should be within this.

Model	Output [W]	Brake static friction torque [N•m]	Moment of inertia J [× 10^{-4} kg•m^2]	Mass [kg]
HG-AK0236B	20	0.095	0.0058	0.24

[Unit: mm]

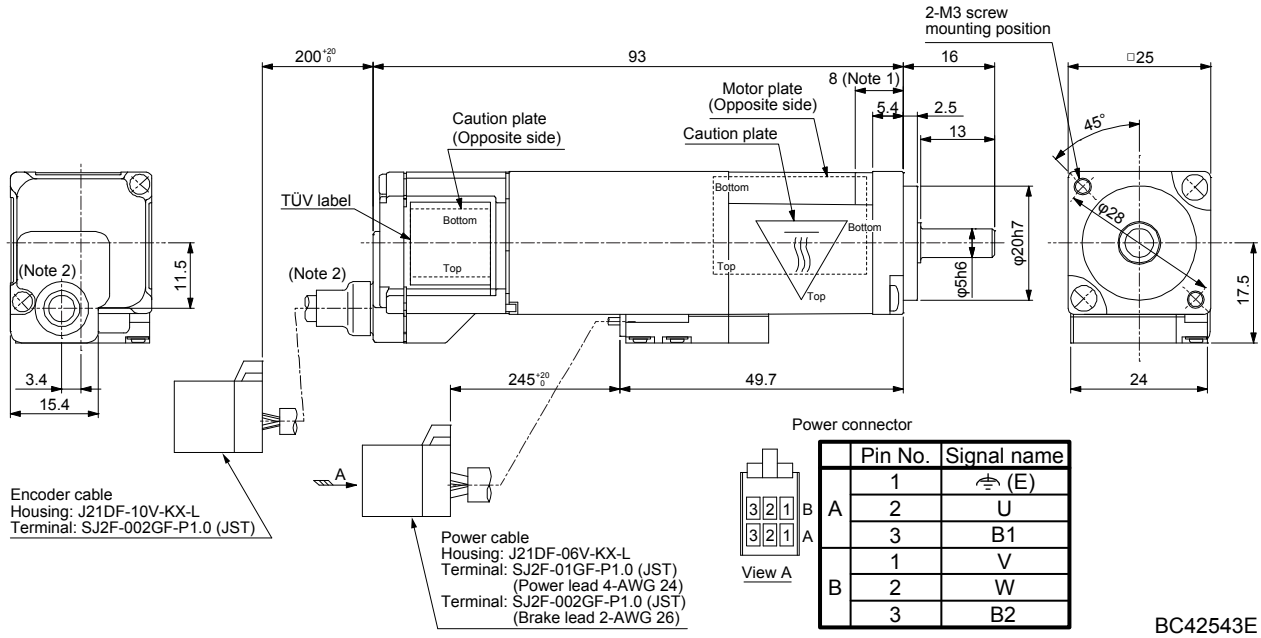

	Pin No.	Signal name
A	1	⏚ (E)
	2	U
	3	B1
B	1	V
	2	W
	3	B2

BC42543E

Note 1. The length of mounting screw should be within this.
2. The encoder cable outlet portion has been changed from the April 2013 production of the motors.

Model	Output [W]	Brake static friction torque [N•m]	Moment of inertia J [× 10^{-4} kg•m^2]	Mass [kg]
HG-AK0236B-S100	20	0.095	0.0058	0.24

[Unit: mm]

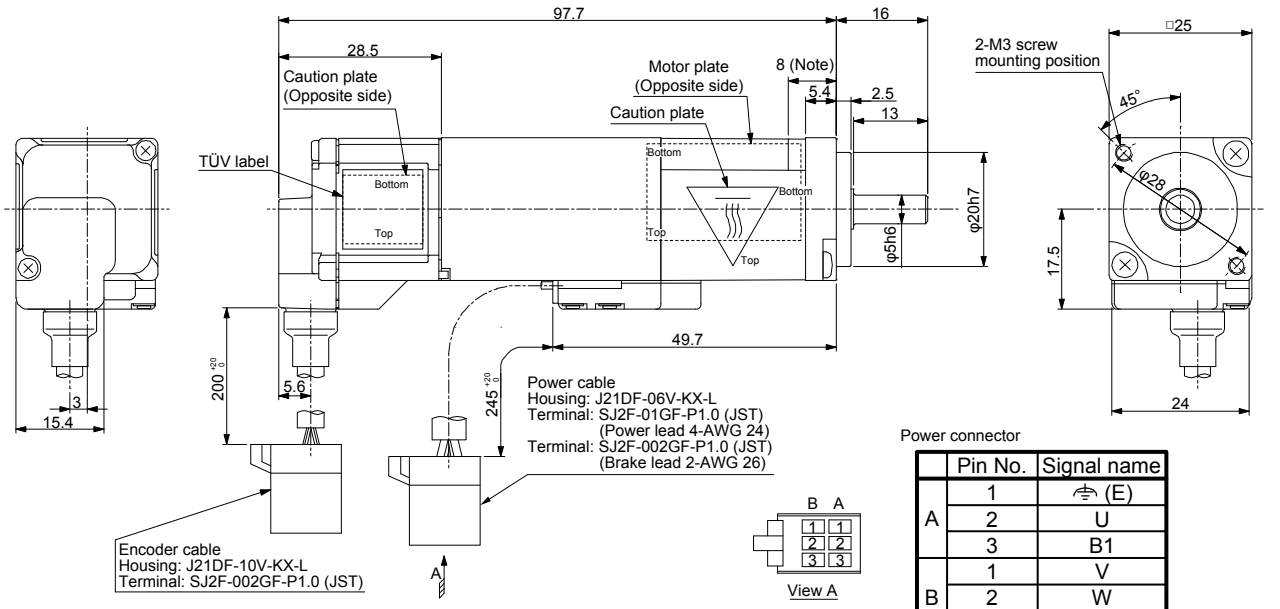

	Pin No.	Signal name
A	1	⏚ (E)
	2	U
	3	B1
B	1	V
	2	W
	3	B2

BC43941*

Note. The length of mounting screw should be within this.

Model	Output [W]	Brake static friction torque [N•m]	Moment of inertia J [× 10^{-4} kg•m^2]	Mass [kg]
HG-AK0336B	30	0.095	0.0074	0.26

[Unit: mm]

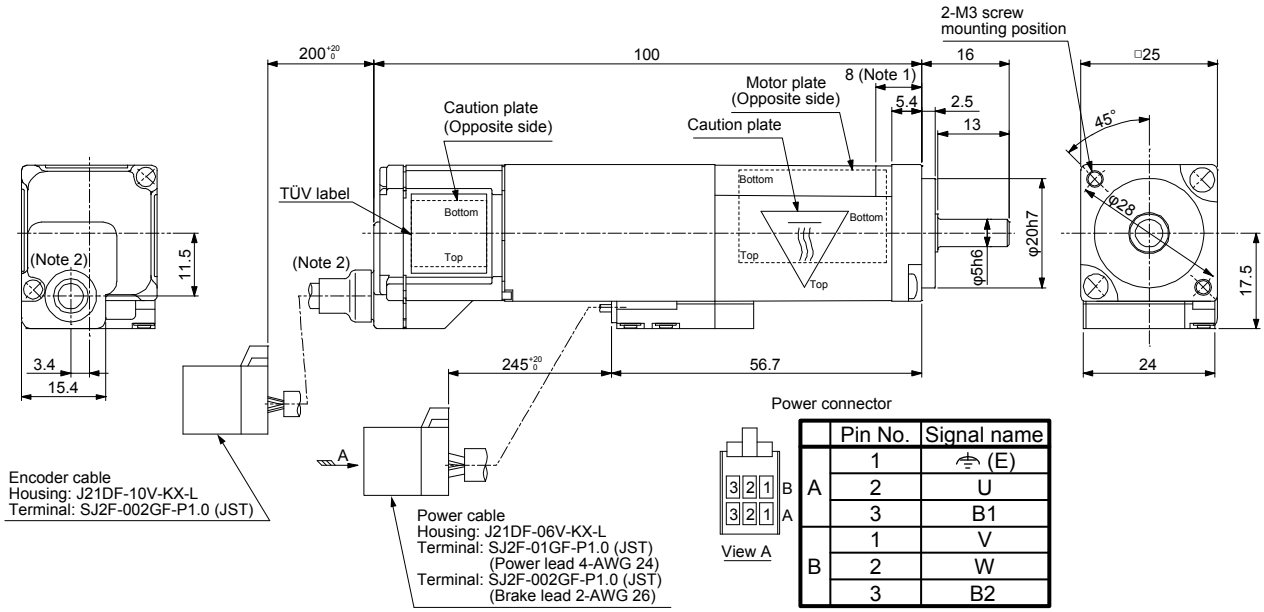

	Pin No.	Signal name
A	1	⏚ (E)
	2	U
	3	B1
B	1	V
	2	W
	3	B2

BC42544E

Note 1. The length of mounting screw should be within this.
2. The encoder cable outlet portion has been changed from the April 2013 production of the motors.

Model	Output [W]	Brake static friction torque [N•m]	Moment of inertia J [× 10^{-4} kg•m^2]	Mass [kg]
HG-AK0336B-S100	30	0.095	0.0074	0.26

[Unit: mm]

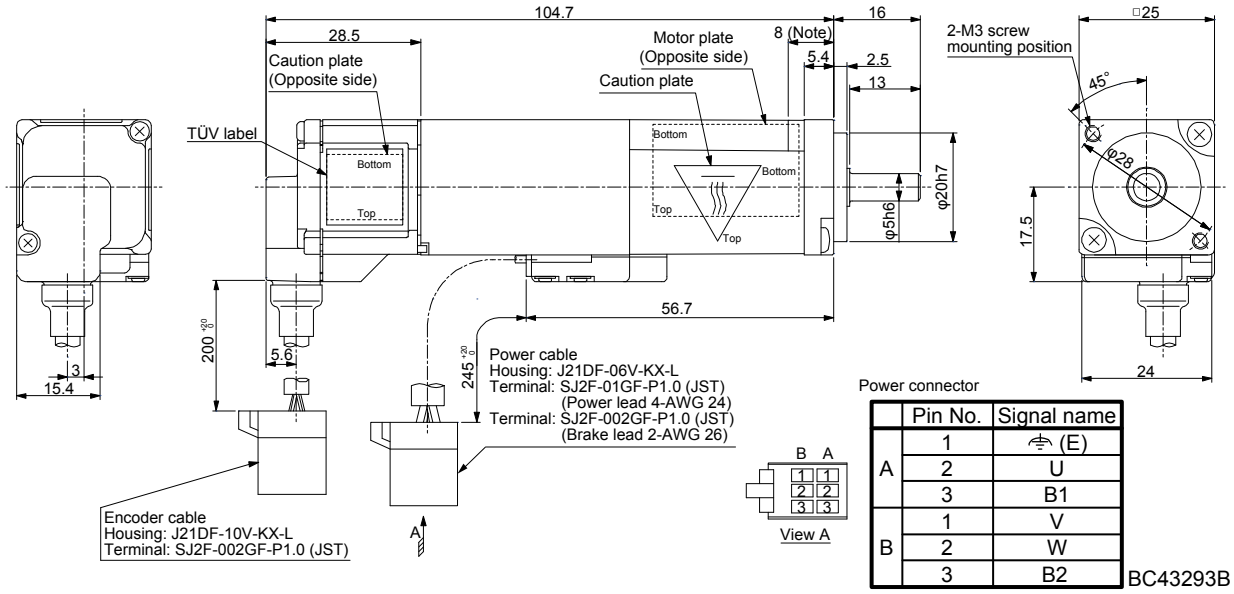

	Pin No.	Signal name
A	1	⏚ (E)
	2	U
	3	B1
B	1	V
	2	W
	3	B2

BC43293B

Note. The length of mounting screw should be within this.

MEMO

APPENDIX

App. 1 Servo motor ID codes

Servo motor series ID	Servo motor type ID	Servo motor encoder ID	Servo motor
0101	F053	0044	HG-MR053
	FF13		HG-MR13
	FF23		HG-MR23
	FF43		HG-MR43
	FF73		HG-MR73
0111	F053		HG-KR053
	FF13		HG-KR13
	FF23		HG-KR23
	FF43		HG-KR43
	FF73		HG-KR73
0121	FF51		HG-SR51
	FF81		HG-SR81
	F121		HG-SR121
	F201		HG-SR201
	F301		HG-SR301
	F421		HG-SR421
	FF52		HG-SR52
	F102		HG-SR102
	F152		HG-SR152
	F202		HG-SR202
	F352		HG-SR352
	F502		HG-SR502
	F702		HG-SR702
0122	FF52		HG-SR524
	F102		HG-SR1024
	F152		HG-SR1524
	F202		HG-SR2024
	F352		HG-SR3524
	F502		HG-SR5024
	F702		HG-SR7024
0131	FF53		HG-JR53
	FF73		HG-JR73
	F103		HG-JR103
	F153		HG-JR153
	F203		HG-JR203
	F353		HG-JR353
	F503		HG-JR503
	F703		HG-JR703
	F903		HG-JR903
	F701		HG-JR701M
	1101		HG-JR11K1M
	1501		HG-JR15K1M
	2201		HG-JR22K1M
	3001		HG-JR30K1M
	3701		HG-JR37K1M

Servo motor series ID	Servo motor type ID	Servo motor encoder ID	Servo motor
0132	FF53	0044	HG-JR534
	FF73		HG-JR734
	F103		HG-JR1034
	F153		HG-JR1534
	F203		HG-JR2034
	F353		HG-JR3534
	F503		HG-JR5034
	F703		HG-JR7034
	F903		HG-JR9034
	F701		HG-JR701M4
	1101		HG-JR11K1M4
	1501		HG-JR15K1M4
	2201		HG-JR22K1M4
	3001		HG-JR30K1M4
	3701		HG-JR37K1M4
	4501		HG-JR45K1M4
	5501		HG-JR55K1M4
0133	F601		HG-JR601
	F801		HG-JR801
	1201		HG-JR12K1
	1501		HG-JR15K1
	2001		HG-JR20K1
	2501		HG-JR25K1
	3001		HG-JR30K1
	3701		HG-JR37K1
0134	F601		HG-JR6014
	F801		HG-JR8014
	1201		HG-JR12K14
	1501		HG-JR15K14
	2001		HG-JR20K14
	2501		HG-JR25K14
	3001		HG-JR30K14
	3701		HG-JR37K14
0141	F103		HG-RR103
	F153		HG-RR153
	F203		HG-RR203
	F353		HG-RR353
	F503		HG-RR503
0151	FF72		HG-UR72
	F152		HG-UR152
	F202		HG-UR202
	F352		HG-UR352
	F502		HG-UR502
0D	F013		HG-AK0136
	F023		HG-AK0236
	F033		HG-AK0336

App. 2 Manufacturer list

Names given in the table are as of February 2016.

Manufacturer	Contact
3M	3M
JST	J.S.T. Mfg. Co., Ltd.
JX Nippon Oil & Energy	JX Nippon Oil & Energy Corporation
Idemitsu Kosan	Idemitsu Kosan Co., Ltd
Exxon Mobil	Exxon Mobil Corporation
Cosmo Oil	Cosmo Oil Co., Ltd.
Shell Oil	Shell Oil Company
DDK	DDK Ltd.
TE Connectivity	TE Connectivity Ltd. Company
Taiyo Cabletec	Taiyo Cabletec Corporation
Toa Electric Industrial	Toa Electric Industrial Co., Ltd.
Nippon Chemi-Con	Nippon Chemi-con Corporation
JAE	Japan Aviation Electronics Industry, Limited
Harmonic Drive Systems	Harmonic Drive Systems Inc.
Panasonic	Panasonic Corporation
Hirose Electric	Hirose Electric Co., Ltd.
Molex	Molex

App. 3 Compliance with the CE marking

App. 3.1 What is CE marking?

The CE marking is mandatory and must be affixed to specific products placed on the European Union. When a product conforms to the requirements, the CE marking must be affixed to the product. The CE marking also applies to machines and equipment incorporating servos.

(1) EMC directive
The EMC directive applies to the servo motor alone. Therefore servo motor is designed to comply with the EMC directive. The EMC directive also applies to machines and equipment incorporating servo motors.

(2) Low voltage directive
The low voltage directive also applies to the servo motor alone. The servo motor is designed to comply with the low voltage directive.

(3) Machinery directive
The servo motor as a single unit does not comply with the Machinery directive due to correspondence with "Partly completed machinery" of 2006/42/EC article2 (g). However, machines and equipment incorporating servo motors will be complied. Please check your machines and equipment as a whole if they are complied.

App. 3.2 For compliance

Be sure to perform an appearance inspection of every unit before installation. In addition, have a final performance inspection on the entire machine/system, and keep the inspection record.

(1) Wiring
Use wirings which complies with EN for the servo motor power. Complying EN products are available as options. Refer to chapter 5 for details of the options.

(2) Performing EMC tests
When EMC tests are run on a machine and device into which the servo motor and servo motor have been installed, it must conform to the electromagnetic compatibility (immunity/emission) standards after it has satisfied the operating environment and electrical equipment specifications.
For EMC directive conforming methods about servo amplifiers and servo motors, refer to the EMC Installation Guidelines (IB(NA)67310) and each Servo Amplifier Instruction Manual.

App. 4 Compliance with UL/CSA standard

Use the UL/CSA standard-compliant model of servo motor. For the latest information of compliance, contact your local sales office.
Unless otherwise specified, the handling, performance, specifications, etc. of the UL/CSA standard-compliant models are the same as those of the standard models.

(1) Flange size

The servo motor is compliant with the UL/CSA standard when it is mounted on the flanges made of aluminum whose sizes are indicated in the following table.
The rated torque of the servo motor under the UL/CSA standard indicates the continuous permissible torque value that can be generated when it is mounted on the flange specified in this table and used in the environment of 0 °C to 40 °C ambient temperature. Therefore, to conform to the UL/CSA standard, mount the servo motor on a flange with a heat radiating effect equivalent to that of this flange.

Flange size [mm]	Servo motor					
	HG-MR/HG-KR	HG-SR	HG-JR	HG-RR	HG-UR	HG-AK
150 × 150 × 3						0136 0236 0336
250 × 250 × 6	053 13 23					
250 × 250 × 12	43	51 81 52(4) 102(4) 152(4)	53(4) 73(4) 103(4) 153(4) 203(4)	103 153 203		
300 × 300 × 12	73					
300 × 300 × 20		121 201 202(4) 352(4)				
550 × 550 × 30			353(4) 503(4)	353 503	72 152	
650 × 650 × 35		301 421 502(4) 702(4)	703(4) 903(4) 701M(4) 11K1M(4) 15K1M(4) 22K1M(4) 30K1M(4) 37K1M(4) 601(4) 801(4) 12K1(4) 15K1(4) 20K1(4) 25K1(4)		202 352 502	
950 × 950 × 35			45K1M4 55K1M4 30K1(4) 37K1(4)			

(2) Selection example of wires

To comply with the UL/CSA standard, use UL-approved copper wires rated at 75 °C for wiring.
The following table shows wires [AWG] rated at 75 °C.

(a) HG-MR series and HG-KR series

Servo motor	Wire [AWG]	
	U/V/W/⏚	B1/B2
HG-MR053	14 (Note)	16 (Note)
HG-MR13		
HG-MR23		
HG-MR43		
HG-MR73		
HG-KR053		
HG-KR13		
HG-KR23		
HG-KR43		
HG-KR73		

Note. For fabricating extension cables to wire a servo amplifier and a servo motor, use the option. Refer to chapter 5 for details of the options.

(b) HG-SR series

Servo motor	Wire [AWG]	
	U/V/W/⏚	B1/B2
HG-SR51	14	16
HG-SR81		
HG-SR121		
HG-SR201		
HG-SR301	12	
HG-SR421	10 (Note)	
HG-SR52	14	
HG-SR102		
HG-SR152		
HG-SR202		
HG-SR352	12	
HG-SR502	10 (Note)	
HG-SR702	8 (Note)	
HG-SR524	14	
HG-SR1024		
HG-SR1524		
HG-SR2024		
HG-SR3524		
HG-SR5024	12 (Note)	
HG-SR7024	10 (Note)	

Note. Refer to each servo amplifier instruction manual for crimp terminals and crimping tools used for connection with the servo amplifier.

(c) HG-JR series

1) 3000 r/min series

Servo motor	Wire [AWG]		
	U/V/W/⏚		B1/B2
	Standard	When the maximum torque is 400% (Note 2)	
HG-JR53	14	14	16
HG-JR73			
HG-JR103			
HG-JR153			
HG-JR203			
HG-JR353	12	12 (Note 1)	
HG-JR503	10 (Note 1)	10 (Note 1)	
HG-JR703	8 (Note 1)		
HG-JR903	6 (Note 1)		
HG-JR534	14	14	
HG-JR734			
HG-JR1034			
HG-JR1534			
HG-JR2034			
HG-JR3534		14 (Note 1)	
HG-JR5034	12 (Note 1)	12 (Note 1)	
HG-JR7034	10 (Note 1)		
HG-JR9034	8 (Note 1)		

Note 1. Refer to each servo amplifier instruction manual for crimp terminals and crimping tools used for connection with the servo amplifier.

2. The maximum torque can be increased to 400% by changing the servo amplifier. Refer to section 8.2 for the combinations.

2) 1500 r/min series

Servo motor	Wire [AWG]		
	U/V/W/⏚	B1/B2	BU/BV/BW
HG-JR701M	8 (Note)	16	
HG-JR11K1M	6 (Note)		
HG-JR15K1M	4 (Note)		
HG-JR22K1M	2 (Note)		16
HG-JR30K1M	2/0 (Note)		
HG-JR37K1M			
HG-JR701M4	12 (Note)	16	
HG-JR11K1M4	8 (Note)		
HG-JR15K1M4			
HG-JR22K1M4	6 (Note)		16
HG-JR30K1M4	4 (Note)		
HG-JR37K1M4	2 (Note)		
HG-JR45K1M4			
HG-JR55K1M4			

Note. Refer to each servo amplifier instruction manual for crimp terminals and crimping tools used for connection with the servo amplifier.

3) 1000 r/min series

Servo motor	Wire [AWG]		
	U/V/W/⏚	B1/B2	BU/BV/BW
HG-JR601	8 (Note)	16	
HG-JR801	6 (Note)		
HG-JR12K1			
HG-JR15K1	4 (Note)		16
HG-JR20K1	2 (Note)		
HG-JR25K1			
HG-JR30K1	2/0 (Note)		
HG-JR37K1			
HG-JR6014	12 (Note)	16	
HG-JR8014	10 (Note)		
HG-JR12K14	8 (Note)		
HG-JR15K14			16
HG-JR20K14	6 (Note)		
HG-JR25K14			
HG-JR30K14			
HG-JR37K14	4 (Note)		

Note. Refer to each servo amplifier instruction manual for crimp terminals and crimping tools used for connection with the servo amplifier.

(d) HG-RR series

Servo motor	Wire [AWG]	
	U/V/W/⏚	B1/B2
HG-RR103	14	16
HG-RR153		
HG-RR203	12	
HG-RR353	10 (Note)	
HG-RR503		

Note. Refer to each servo amplifier instruction manual for crimp terminals and crimping tools used for connection with the servo amplifier.

(e) HG-UR series

Servo motor	Wire [AWG]	
	U/V/W/⏚	B1/B2
HG-UR72	14	16
HG-UR152		
HG-UR202	12	
HG-UR352	10 (Note)	
HG-UR502		

Note. Refer to each servo amplifier instruction manual for crimp terminals and crimping tools used for connection with the servo amplifier.

(f) HG-AK series

Servo motor	Wire [AWG]	
	U/V/W/⏚	B1/B2
HG-AK0136 HG-AK0236 HG-AK0336	14 (Note)	16

Note. This is applicable when fabricating an extension cable. Use an option for wiring with the servo motor. Refer to chapter 5 for details of the options.

App. 5 Calculation methods for designing

App. 5.1 Specification symbol list

The following symbols are required for selecting the proper servo.

T_a: Acceleration torque	[N•m]	g: Gravitational acceleration (9.8 [m/s^2])	
T_d: Deceleration torque	[N•m]	μ: Friction coefficient	
T_{Ma}: Torque necessary for acceleration	[N•m]	π: Pi constant (3.14)	
T_{Md}: Torque necessary for deceleration	[N•m]	P_f: Number of feedback pulses in position control mode	[pulse/rev]
T_{LH}: Load torque converted into equivalent value on servo motor shaft during stop	[N•m]	f: Input pulse frequency in position control mode	[pulse/s]
	[N•m]	f_0: Input pulse frequency during fast feed in position control mode	[pulse/s]
T_L: Load torque converted into equivalent value on servo motor shaft	[N•m]	t_{psa}: Acceleration time constant of pulse frequency command in position control mode	[s]
T_U: Unbalanced torque	[N•m]	t_{psd}: Deceleration time constant of pulse frequency command in position control mode	[s]
T_F: Load friction torque	[N•m]	K_p: Position loop gain 1	[rad/s]
T_B: Brake static friction torque	[N•m]	T_p: Position control time constant (Tp = 1/Kp)	[s]
T_{L0}: Load torque on load shaft	[N•m]	ΔI: Feed per feedback pulses in position control mode Travel distance per pulse	[mm/pulse]
T_{rms}: Continuous effective load torque converted into equivalent value on servo motor shaft	[N•m]	ΔI_0: Feed per command pulse in position control mode Travel distance per command pulse	[mm/pulse]
J_L: Load inertia moment converted into equivalent value on servo motor shaft	[× 10^{-4} kg•m^2]	I: Feed	[mm]
J_{L0}: Load inertia moment on load shaft	[× 10^{-4} kg•m^2]	P: Number of internal command pulses	[pulse]
J_M: Servo motor's rotor inertia moment	[× 10^{-4} kg•m^2]	t_s: Internal settling time	[s]
N: Servo motor speed	[r/min]	t_0: Positioning time	[s]
N_0: Servo motor speed during fast feed	[r/min]	t_c: Time at constant speed of servo motor in one cycle	[s]
N_{L0}: Load shaft speed during fast feed	[r/min]	tl: Stopping time in one cycle	[s]
V: Moving part speed	[mm/min]	Δ_ε: Positioning accuracy	[mm]
V_0: Moving part speed during fast feed	[mm/min]	ε: Number of droop pulses	[pulse]
P_B: Ball screw lead	[mm]	ΔS: Travel distance per servo motor revolution	[mm/rev]
Z_1: Number of gear teeth on servo motor shaft		W: Mass	[kg]
Z_2: Number of gear teeth on load gear		L_{max}: Maximum coasting distance	[mm]
n: Gear ratio $n = \frac{Z_2}{Z_1}$ Speed reduced when n > 1, Speed increased when n < 1			
η: Drive system efficiency			

App. 5.2 Position resolution and electronic gear setting

Position resolution (travel distance per pulse ΔI) is determined by travel distance per servo motor revolution ΔS and the number of encoder feedback pulses P_f, and is represented by Equation 5.1. As the number of feedback pulses depends on the servo motor series, refer to standard specifications in the chapter of servo motor series.

$$\Delta I = \frac{\Delta S}{P_f} \quad \cdots\cdots (5.1)$$

ΔI: Travel distance per pulse [mm/pulse]
ΔS: Travel distance per servo motor revolution [mm/rev]
P_f: Number of feedback pulses [pulse/rev]

Since ΔI has the relation represented by equation 5.1, its value is fixed in the control system after the drive system and encoder have been determined. However, travel distance per command pulse can be set as desired using the parameters.

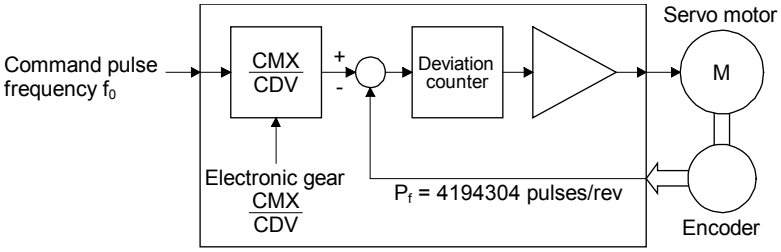

As shown above, command pulses are multiplied by CMX/CDV set in the parameters to be position control pulses. Travel distance per command pulse ΔI_0 is expressed by Equation 5.2.

$$\Delta I_0 = \frac{\Delta S}{P_f} \cdot \frac{CMX}{CDV} = \Delta I \cdot \frac{CMX}{CDV} \quad \cdots\cdots (5.2)$$

CMX : Electronic gear (command pulse multiplication numerator)
CDV : Electronic gear (command pulse multiplication denominator)

Using the above relation, travel distance per command pulse can be set to a value without fraction.

[Setting example]
Find a parameter value for ΔI_0 = 0.001 mm/pulse in a drive system where ball screw lead P_B = 10 mm and reduction ratio 1/n = 1.
The encoder feedback pulses P_f of the HG-KR = 4194304 pulses/rev.
Since ΔS = 10 mm/rev, the following is obtained according to equation 5.2.

$$\frac{CMX}{CDV} = \Delta I_0 \cdot \frac{P_f}{\Delta S} = 0.001 \cdot \frac{4194304}{10} = \frac{262144}{625}$$

Relation between position resolution Δl and overall accuracy
Positioning accuracy of machine is the sum of electrical errors and mechanical errors. Normally, provisions should be made so that positioning accuracy are not affected by electrical system errors. As a guideline, Equation 5.3 should be satisfied.

$$\Delta l < \left[\frac{1}{5} \sim \frac{1}{10}\right] \cdot \Delta\varepsilon \quad \cdots\cdots (5.3)$$

Δl: Travel distance per feedback pulse [mm/pulse]
Δε: Positioning accuracy [mm]

App. 5.3 Speed and command pulse frequency

The servo motor is run at a speed where the command pulses and feedback pulses are equivalent. Therefore, the command pulse frequency and feedback pulse frequency are equivalent. The following shows the relation including the parameter settings (CMX and CDV). (Refer to the following diagram.)

$$f_0 \cdot \frac{CMX}{CDV} = P_f \cdot \frac{N_0}{60} \quad \cdots\cdots (5.4)$$

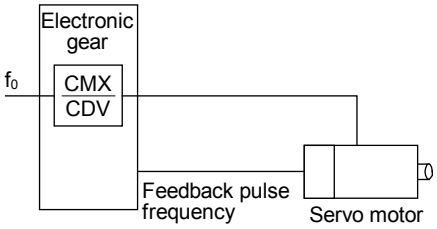

f_0: Command pulse frequency [pulse/s] (differential line driver)
CMX: Electronic gear (command pulse multiplication numerator)
CDV: Electronic gear (command pulse multiplication denominator)
N_0: Servo motor speed [r/min]
P_f: Number of feedback pulses [pulse/rev] (P_f = 4194304 for HG-KR)

According to equation 5.4, the following equations may be used to obtain the electronic gear and command pulse frequency to rotate the servo motor at N_0.

・Electronic gear

$$\frac{CMX}{CDV} = P_f \cdot \frac{N_0}{60} \cdot \frac{1}{f_0} \quad \cdots\cdots (5.5)$$

・Command pulse frequency

$$f_0 = P_f \cdot \frac{N_0}{60} \cdot \frac{CDV}{CMX} \quad \cdots\cdots (5.6)$$

[Setting example]
Obtain the command pulse frequency required to run the HG-KR at 3000 r/min.
The following result will be found according to equation 5.6.

$$f_0 = 4194304 \cdot \frac{N_0}{60} \cdot \frac{CDV}{CMX}$$

(Command pulse frequency)

$$= 4194304 \cdot \frac{3000}{60} \cdot 1$$

$$= 209715200 \text{ [pulses/s]}$$

However, as the maximum input command pulse frequency in the differential line driver type is 4 Mpulses/s for MR-J4 servo amplifier, 209715200 pulses/s cannot be entered.
To run the servo motor at the speed of 3000 r/min at not more than 4 Mpulses/s, the electronic gear setting must be changed. This electronic gear is found by equation 5.5.

$$\frac{CMX}{CDV} = 4194304 \cdot \frac{3000}{60} \cdot \frac{1}{4 \cdot 10^6}$$

(Electronic gear)

$$= \frac{32768}{625}$$

Therefore, the parameters are set to CMX = 32768 and CDV = 625.

App. 5.4 Stopping characteristics

(1) Droop pulses (ε)

When you use a pulse train command to run the servo motor, the relation between the command pulse frequency and servo motor speed will be as follows. The difference between the command pulses and feedback pulses during acceleration are called droop pulses, which are accumulated in the servo amplifier deviation counter. Equation 5.7 defines a relation between the command pulse frequency (f) and position control gain 1 (Kp).

$$\varepsilon \approx \frac{f_0}{K_p} \text{ [pulse]} \quad \cdots\cdots (5.7)$$

Supposing that the value of position control gain 1 is 70 rad/s, the droop pulses during operation will be as follows at the command pulse frequency of 200 kpulses/s according to equation 5.7.

$$\varepsilon \approx \frac{200 \cdot 10^3}{70} \approx 2858 \text{ [pulses]}$$

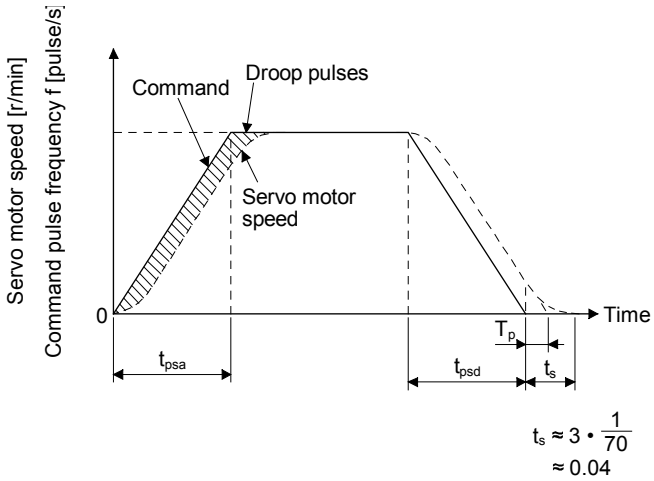

(2) Settling time (t_s) during linear acceleration/deceleration

Since droop pulses still exist regardless of zero command pulse, settling time (t_s) is required until the servo motor stops.

Set the operation pattern in consideration for the settling time.

The settling time (t_s) value is obtained according to equation 5.8.

$$t_s \approx 3 \cdot T_p$$

$$= 3 \cdot \frac{1}{K_p} \text{ [s]} \cdots\cdots (5.8)$$

*When K_p = 70 [rad/s], $t_s \approx 0.04$ [s]. (above diagram)

The settling time (t_s) indicates the time required for the servo motor to stop in the necessary positioning accuracy range. This does not always mean that the servo motor has stopped completely. Thus, especially when the servo motor is used in high-duty operation and positioning accuracy has no margin for travel distance per pulse (Δl), the value obtained by equation 5.8 must be increased.

The settling time (t_s) will vary with the moving part conditions. Especially when the load friction torque is large, movement may be unstable near the stopping position.

App. 5.5 Capacity selection

As a first step, confirm the load conditions and temporarily select the servo motor capacity.
Then, determine the operation pattern, calculate required torques according to the following equations, and check that the servo motor of the initially selected capacity may be used for operation .

(1) Initial selection of servo motor capacity
After calculating the load torque (T_L) and load moment of inertia (J_L), select a servo motor which will satisfy the following two relations.

Servo motor rated torque > T_L
Servo motor $J_M > J_L/m$

m = 3: High duty (more than 100 times/min.)
Settling time; 40 ms or less
m = 5: Middle frequency (60 times/min. to 100 times/min.)
Settling time; 100 ms or less
m = Permissible load moment of inertia: Low duty (less than 60 times/min.)
Settling time; more than 100 ms

Find the acceleration and deceleration torques and continuous effective load torque as described in (2) to make a final selection. For high-duty positioning, the load moment of inertia (J_L) value should be as small as possible.
If positioning is infrequent as in line control, the load moment of inertia (J_L) value may be slightly larger than in the above conditions.

(2) Acceleration and deceleration torques

The following equations are used to calculate the acceleration and deceleration torques in the following operation pattern.

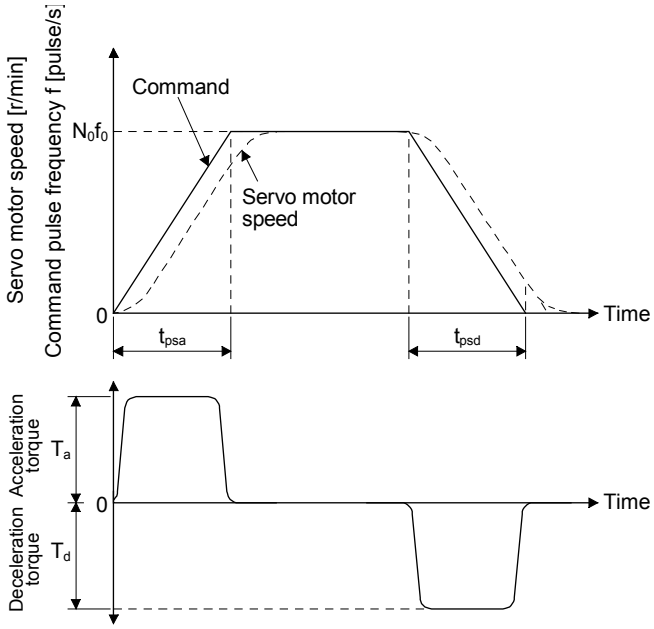

・Acceleration torque $T_a = \dfrac{(J_L + J_M) \cdot N_0}{9.55 \cdot 10^4} \cdot \dfrac{1}{t_{psa}}$ ..... (5.9)

・Deceleration torque $T_d = \dfrac{(J_L + J_M) \cdot N_0}{9.55 \cdot 10^4} \cdot \dfrac{1}{t_{psd}}$ ..... (5.10)

(3) Torques required for operation

POINT
●For the gain adjustment, check that the machine operates below the maximum torque of the servo motor. It is recommended that generated torque during operation is under 90% of the maximum torque of the servo motor.

Torques required for the servo motor are the highest during acceleration. If the servo motor torque found with equation 5.11 to 5.13 exceed the maximum torque, the motor will not accelerate as commands. Set the calculated value within the servo motor's maximum torque. Since a friction load is normally applied during deceleration, only the acceleration torque needs to be considered. In the regenerative mode, the value found by equation 5.13 is negative.

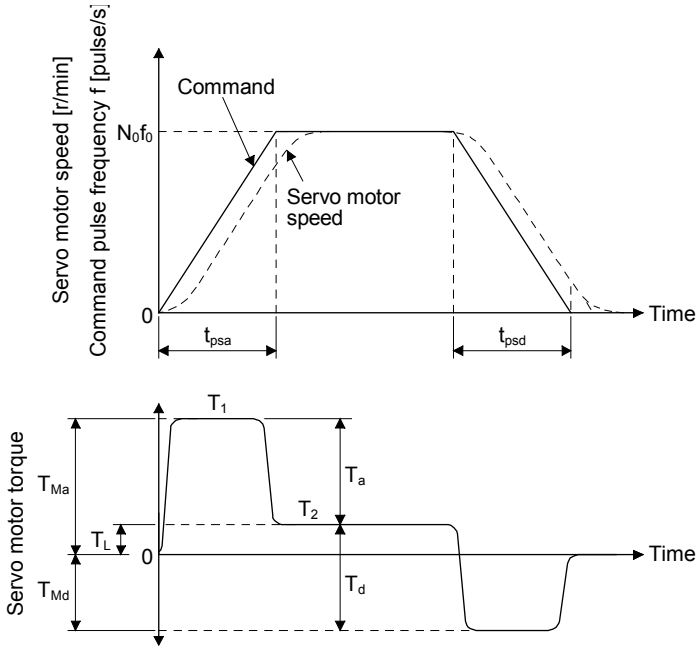

$T_1 = T_{Ma} = T_a + T_L$ ····· (5.11)

$T_2 = T_L$ ····· (5.12)

$T_3 = T_{Md} = -T_d + T_L$ ····· (5.13)

(4) Continuous effective load torque

If the torque required for the servo motor changes with time, the continuous effective load torque should be lower than the rated torque of the servo motor. There may be a servo motor torque delay at the start of acceleration or deceleration due to a delay in the control system. To simplify the calculation, however, it is assumed that constant acceleration and deceleration torques are applied during t_{psa} and t_{psd}.

The following equation is used to calculate the continuous effective load torque in the following operation pattern. T_{LH} indicates the torque applied during a servo motor stop. A large torque may be applied especially during a stop in vertical motion applications, and this must be fully taken into consideration. During vertical drive, the unbalanced torque T_U will become T_{LH}.

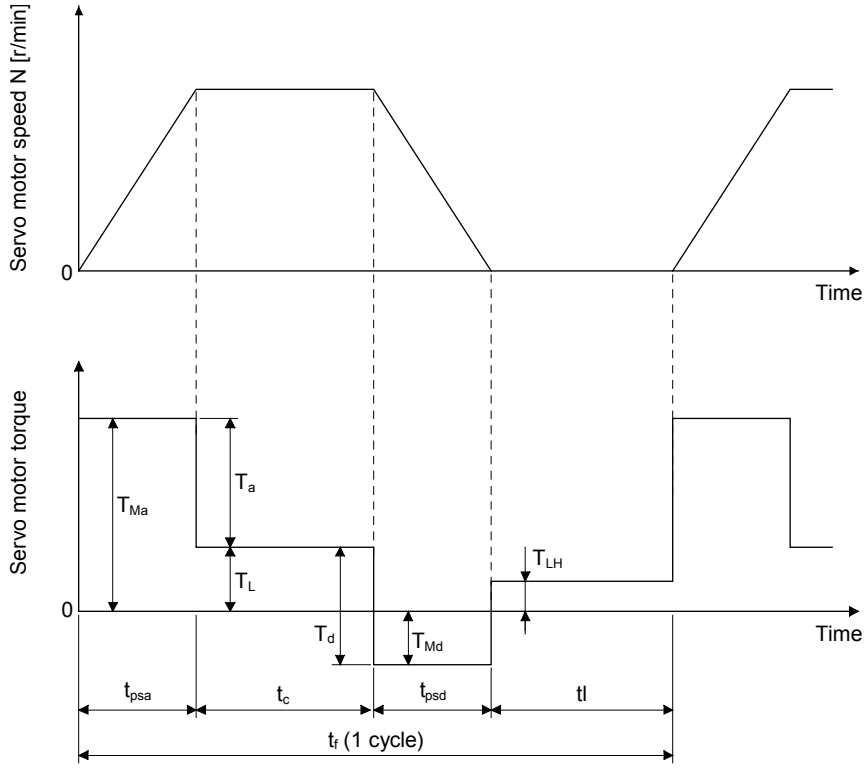

$$T_{rms} = \sqrt{\frac{T_{Ma}^2 \cdot t_{psa} + T_L^2 \cdot t_c + T_{Md}^2 \cdot t_{psd} + T_{LH}^2 \cdot tl}{t_f}} \quad \cdots\cdots (5.14)$$

App. 5.6 Load torque equations

Typical load torque equations are indicated below.

Type	Mechanism	Equation
Linear movement	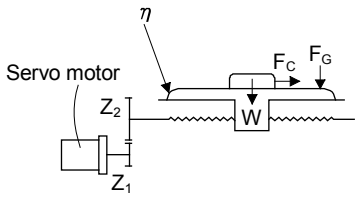	$T_L = \frac{F}{2 \cdot 10^3 \cdot \pi \cdot \eta} \cdot \frac{V}{N} = \frac{F \cdot \Delta S}{2 \cdot 10^3 \cdot \pi \cdot \eta}$ ····· (5.15) F: Force in the axial direction of the machine in linear motion [N] F in equation 5.15 is obtained with equation 5.16 when the table is moved, for example, as shown in the left diagram. $F = F_c + \mu \cdot (W \cdot g + F_G)$ ····· (5.16) F_c: Force applied in the axial direction of the moving part [N] F_G: Tightening force of the table guide surface [N] W: Full mass of the moving part [kg]
Rotary movement	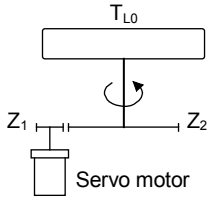	$T_L = \frac{1}{n} \cdot \frac{1}{\eta} \cdot T_{L0} + T_F$ ····· (5.17) T_F: Load friction torque converted into equivalent value on servo motor shaft [N•m]
Vertical movement	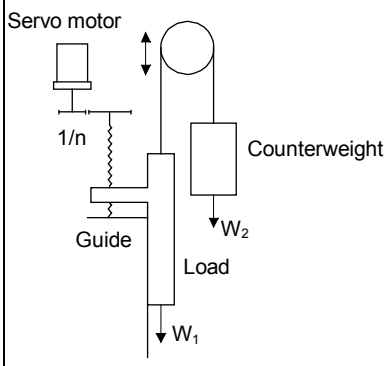	During rise $T_L = T_U + T_F$ ····· (5.18) During fall $T_L = -T_U \cdot \eta^2 + T_F$ ····· (5.19) T_F: Friction torque of the moving part [N•m] $T_U = \frac{(W_1 - W_2) \cdot g}{2 \cdot 10^3 \cdot \pi \cdot \eta} \cdot \frac{V}{N} = \frac{(W_1 - W_2) \cdot g \cdot \Delta S}{2 \cdot 10^3 \cdot \pi \cdot \eta}$ ····· (5.20) $T_F = \frac{\mu(W_1 - W_2) \cdot g \cdot \Delta S}{2 \cdot 10^3 \cdot \pi \cdot \eta}$ ····· (5.21) W_1: Mass of load [kg] W_2: Mass of counterweight [kg]

App. 5.7 Load moment of inertia equations

Typical load moment of inertia equations is indicated below.

Type	Mechanism	Equation
Cylinder	Axis of rotation is on the cylinder center 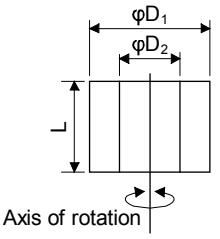 	$J_{L0} = \frac{\pi \cdot \rho \cdot L}{32} \cdot (D_1^4 - D_2^4) = \frac{W}{8} \cdot (D_1^2 + D_2^2)$ ····· (5.22) ρ: Cylinder material density [kg/cm^3] L: Cylinder length [cm] D_1: Cylinder outside diameter [cm] D_2: Cylinder inside diameter [cm] W: Cylinder mass [kg] Reference data: material density Iron: $7.8 \cdot 10^{-3}$ [kg/cm^3] Aluminum: $2.7 \cdot 10^{-3}$ [kg/cm^3] Copper: $8.96 \cdot 10^{-3}$ [kg/cm^3]
	Axis of rotation is on the cylinder center 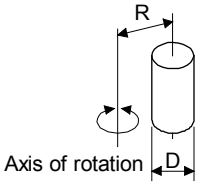 	$J_{L0} = \frac{W}{8} \cdot (D^2 + 8R^2)$ ····· (5.23)
Square block	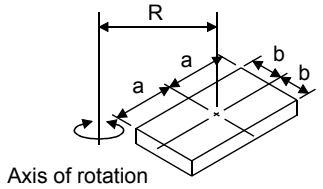 	$J_{L0} = W \cdot \left(\frac{a^2 + b^2}{3} + R^2\right)$ ····· (5.24) W: Square block mass [kg] a, b, R: Left diagram [cm]
Object which moves linearly	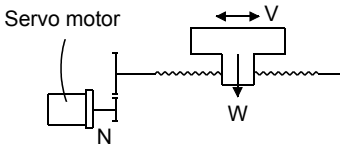 	$J_L = W \cdot \left(\frac{V}{600 \cdot \omega}\right)^2 = W \cdot \left(\frac{1}{2 \cdot \pi \cdot N} \cdot \frac{V}{10}\right)^2 = W \cdot \left(\frac{\Delta S}{20 \cdot \pi}\right)^2$ ····· (5.25) V: Speed of object which moves linearly [mm/min] ΔS: Travel distance of object moving linearly per servo motor revolution [mm/rev] W: Square block mass [kg]
Object that is hung with pulley	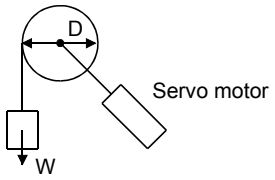 	$J_L = W \cdot \left(\frac{D}{2}\right)^2 + J_P$ ····· (5.26) J_P: Pulley moment of inertia [× 10^{-4} kg•m^2] D: Pulley diameter [cm] W: Square block mass [kg]
Converted load	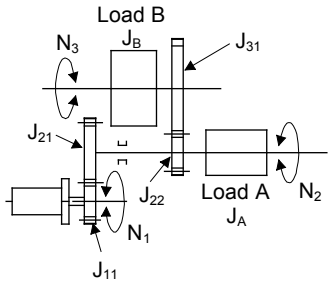 	$J_L = J_{11} + (J_{21} + J_{22} + J_A) \cdot \left(\frac{N_2}{N_1}\right)^2 + (J_{31} + J_B) \cdot \left(\frac{N_3}{N_1}\right)^2$ ····· (5.27) J_A, J_B: Moment of inertia of load A, B [× 10^{-4} kg•m^2] J_{11} to J_{31}: Moment of inertia [× 10^{-4} kg•m^2] N_1 to N_3: Speed of each shaft [r/min]

App. 5.8 Precautions for home position return

When a general positioning unit is used, the sequence of events is as shown in the following figure.

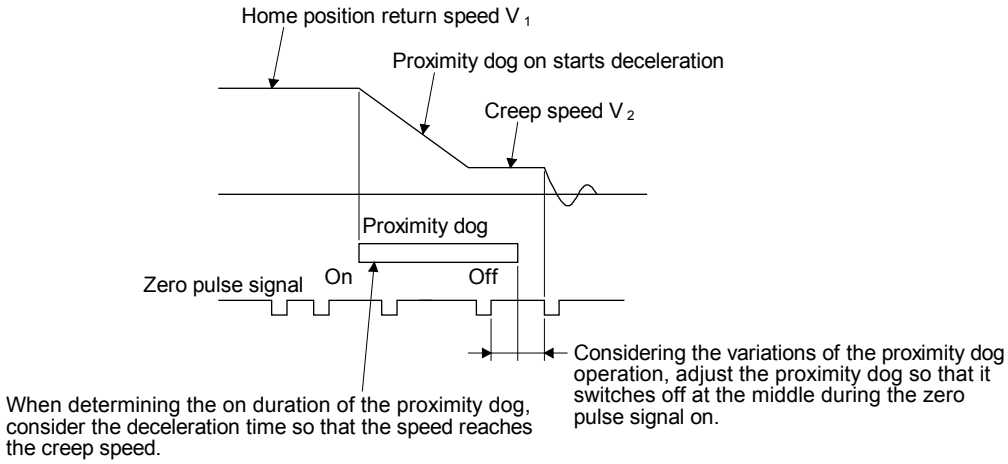

(1) When determining the on duration of the proximity dog, consider the delay time of the control section and the deceleration time so that the creep speed is attained. If the proximity dog signal switches off during deceleration, precise home position return cannot be performed.

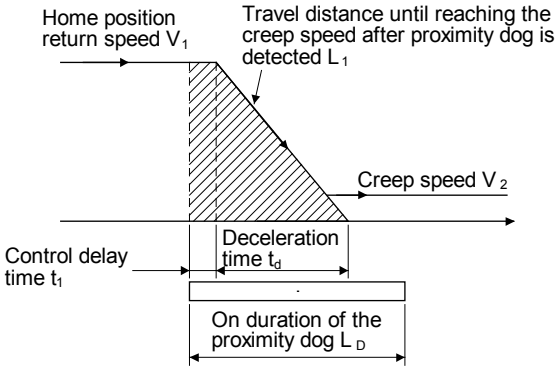

Travel distance L_1 in the chart can be obtained by equation 5.28.

$$L_1 = \frac{1}{60} \cdot V_1 \cdot t_1 \cdot + \frac{1}{120} \cdot V_1 \cdot t_d \cdot \left\{ 1 - \left(\frac{V_2}{V_1} \right)^2 \right\} + \frac{1}{60} \cdot V_1 \cdot T_P \cdots\cdots (5.28)$$

On duration of the proximity dog L_D [mm] must be longer than L_1 obtained by equation 5.28, as indicated in equation 5.29.

$$L_D > L_1 \cdots\cdots (5.29)$$

where,
V_1, V_2: As shown in the chart [mm/min]
t_1, t_d: As shown in the chart [s]
L_1: As shown in the chart [mm]
L_D: As shown in the chart [mm]

(2) Set the end (off position) of the proximity dog signal at the middle of two on positions (lows) of the zero pulse signal. If it is set near either on position of the zero pulse signal, the positioning unit is liable to misdetect the zero pulse signal. In this case, a fault will occur, e.g. the home position will shift by one revolution of the servo motor.

App. 5.9 Selection example

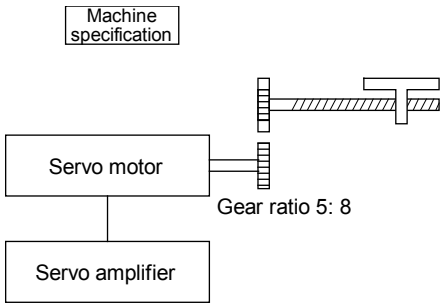

Feed speed of moving part	V_0 = 30000 [mm/min]
Travel distance per command pulse	Δl_0 = 0.001 [mm/pulse]
Feed per cycle	l = 400 [mm]
Positioning time	t_0 = within 1 [s]
Number of feeds	40 [times/min]
Operation cycle	t_f = 1.5 [s]
Reduction ratio	1/n = 5/8
Moving part mass	W = 60 [kg]
Drive system efficiency	η = 0.8
Friction coefficient	μ = 0.2
Ball screw lead	P_B = 16 [mm]
Ball screw diameter	D_B = 20 [mm]
Ball screw length	L_B = 500 [mm]
Gear diameter (servo motor shaft)	D_{G1} = 25 [mm]
Gear diameter (load shaft)	D_{G2} = 40 [mm]
Gear face width	L_G = 10 [mm]
Number of feedback pulses	P_f = 4194304 [pulses/rev]

(1) Selection of control parameters

Setting of electronic gear (command pulse multiplication numerator/denominator)

There is the following relation between the electronic gear and command resolution Δl_0.

$$\Delta l_0 = \frac{P_B}{P_f \cdot n} \cdot \left(\frac{CMX}{CDV}\right)$$

When the above machining specifications are substituted in the above equation

$$0.001 = \frac{16}{4194304 \cdot 8/5} \cdot \frac{CMX}{CDV}$$

$$\frac{CMX}{CDV} = \frac{1}{1000} \cdot \frac{4194304 \cdot 8/5}{16} = \frac{262144}{625}$$

$\frac{CMX}{CDV}$ Acceptable as CMX/CDV is within 1/10 to 4000

(2) Servo motor speed

$$N_0 = \frac{V_0}{P_B} \cdot \frac{1}{1/n} = \frac{30000}{16} \cdot \frac{8}{5} = 3000 \text{ [r/min]}$$

(3) Acceleration/deceleration time constant

$$t_{psa} = t_{psd} = t_0 - \frac{l}{V_0/60} - t_s = 0.05 \text{ [s]}$$

t_s: Settling time (Here, this is assumed to be 0.15 s.)

(4) Operation pattern

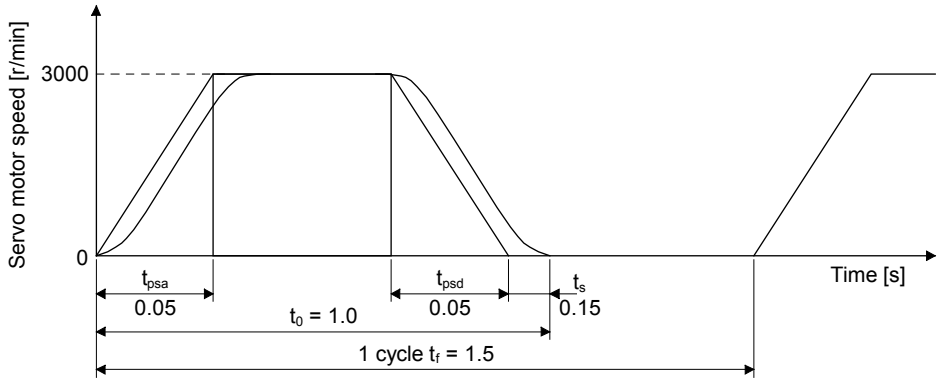

(5) Load torque (converted into equivalent value on servo motor shaft)
Travel distance per servo motor revolution

$$\Delta S = P_B \cdot \frac{1}{n} = 16 \cdot \frac{5}{8} = 10 \text{ [mm]}$$

$$T_L = \frac{\mu \cdot W \cdot g \cdot \Delta S}{2 \cdot 10^3 \cdot \pi \cdot \eta} = \frac{0.2 \cdot 60 \cdot 9.8 \cdot 10}{2 \cdot 10^3 \cdot 3.14 \cdot 0.8} = 0.23 \text{ [N•m]}$$

(6) Load moment of inertia (converted into equivalent value on servo motor shaft)
Moving part

$$J_{L1} = W \cdot \left(\frac{\Delta S \cdot 10^{-3}}{2\pi}\right)^2 = 1.52 \cdot 10^{-4}\ [kg \cdot m^2]$$

Ball screw

$$J_{L2} = \frac{\pi \cdot \rho \cdot L_B}{32} \cdot D_B{}^4 \cdot \left(\frac{1}{n}\right)^2 = 0.24 \cdot 10^{-4}\ [kg \cdot m^2]$$

$\rho = 7.8 \cdot 10^3\ [kg/m^3]$ (iron)

Gear (servo motor shaft)

$$J_{L3} = \frac{\pi \cdot \rho \cdot L_G}{32} \cdot D_{G1}{}^4 = 0.03 \cdot 10^{-4}\ [kg \cdot m^2]$$

Gear (load shaft)

$$J_{L4} = \frac{\pi \cdot \rho \cdot L_G}{32} \cdot D_{G2}{}^4 \cdot \left(\frac{1}{n}\right)^2 = 0.08 \cdot 10^{-4}\ [kg \cdot m^2]$$

Full load moment of inertia (converted into equivalent value on servo motor shaft)

$$J_L = J_{L1} + J_{L2} + J_{L3} + J_{L4} = 1.9 \cdot 10^{-4}\ [kg \cdot m^2]$$

(7) Temporary selection of servo motor
Selection conditions

(a) Load torque < servo motor rated torque

(b) Full load moment of inertia < J_R • moment of inertia of the servo motor
J_R: Recommended load to motor inertia ratio
According to above conditions, HG-KR23 (rated torque: 0.64 N•m, maximum torque: 2.2 N•m, moment of inertia: $0.221 \cdot 10^{-4}$ kg•m^2) is selected temporarily.

(8) Acceleration/deceleration torque

Torque necessary for acceleration

$$T_{Ma} = \frac{(J_L/\eta + J_M) \cdot N_0}{9.55 \cdot 10^4 \cdot t_{psa}} + T_L = 1.84 \text{ [N•m]}$$

J_M: Moment of inertia of the servo motor

Torque necessary for deceleration

$$T_{Md} = \frac{-(J_L \cdot \eta + J_M) \cdot N_0}{9.55 \cdot 10^4 \cdot t_{psd}} + T_L = -0.85 \text{ [N•m]}$$

The torque required for the servo motor during acceleration/deceleration must be lower than the servo motor's maximum torque.

(9) Continuous effective load torque

$$T_{rms} = \sqrt{\frac{T_{Ma}^2 \cdot t_{psa} + T_L^2 \cdot t_c + T_{Md}^2 \cdot t_{psd}}{t_f}} = 0.40 \text{ [N•m]}$$

The continuous effective load torque must be lower than the servo motor rated torque.

(10) Torque pattern

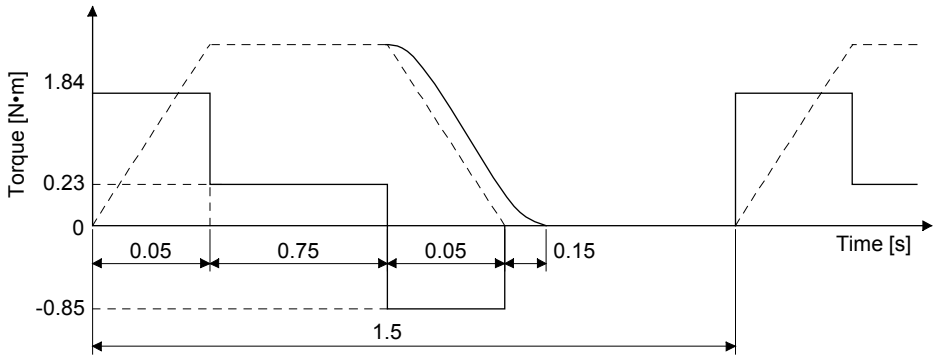

(11) Selection results

The following servo motor and servo amplifier are selected as a result of the calculation.

Servo motor: HG-KR23

Servo amplifier: MR-J4-20A

(a) Electronic gear setting

CMX = 262144

CDV = 625

(b) During rapid feed

Servo motor speed N_0 = 3000 [r/min]

(c) Acceleration/deceleration time constant

$t_{psa} = t_{psd}$ = 0.05 [s]

App. 5.10 Coasting distance of electromagnetic brake

At an emergency stop, the servo motor with an electromagnetic brake stops as the following diagram. Here, the maximum coasting distance (during fast feed) L_{max} will be the area shown with the diagonal line in the figure and can be calculated approximately with equation 5.30. The effect of the load torque is greater near the stopping area. When the load torque is large, the servo motor will stop faster than the value obtained in the equation.

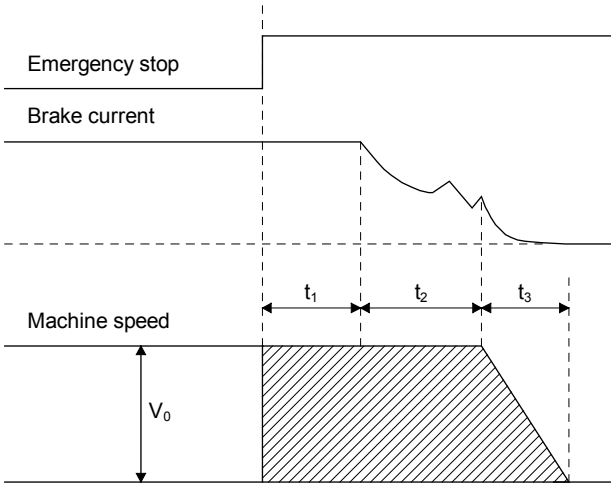

$$L_{max} = \frac{V_0}{60} \cdot \left(t_1 + t_2 + \frac{t_3}{2}\right) \quad \cdots\cdots (5.30)$$

L_{max}: Maximum coasting distance [mm]
V_0: Machine's fast feed speed [mm/min]
t_1: Delay time of control section [s]
t_2: Braking delay time (Note) [s]
t_3: Braking time [s]

$$t_3 = \frac{(J_L + J_M) \cdot N_0}{9.55 \cdot 10^4 \cdot (T_L + 0.8 \cdot T_B)}$$

J_L: Load moment of inertia converted into equivalent value on servo motor shaft (Note) [× 10^{-4} kg•m^2]
J_M: Servo motor rotor's inertia moment [× 10^{-4} kg•m^2]
N_0: Servo motor speed during fast feed [r/min]
T_L: Load torque converted into equivalent value on servo motor shaft [N•m]
T_B: Brake static friction torque (Note) [N•m]

Note. Refer to the chapter of the servo motor series for t_2 and T_B. J_L is moment of inertia of the machine at the servo motor shaft.

App. 5.11 Equation for calculating the electromagnetic brake workload

Calculate the brake workload Eb [J] at an emergency stop with the following equation.

$$Eb = \frac{(J_M + J_L) \cdot N^2}{182} \cdot 10^{-4}$$

N: Servo motor speed [r/min]
J_M: Servo motor rotor's inertia moment [× 10^{-4} kg•m^2]
J_L: Load moment of inertia converted into equivalent value on servo motor shaft [× 10^{-4} kg•m^2]

App. 6 Selection example of servo motor power cable

POINT

- Selection condition of wire size is as follows.
  Wire length: 30 m or less
- Some cables do not fit into the option or the recommended cable clamp. Select a cable clamp according to the cable diameter.

Selection example when using the 600 V grade EP rubber insulated chloroprene sheath cab-tire cable (2PNCT) for servo motor power (U, V, and W) is indicated below.

Servo motor	Wire size [mm^2]
HG-SR51	1.25
HG-SR81	1.25
HG-SR121	2
HG-SR201	2
HG-SR301	3.5
HG-SR421	5.5
HG-SR52	1.25
HG-SR102	1.25
HG-SR152	2
HG-SR202	2
HG-SR352	3.5
HG-SR502	5.5
HG-SR702	8
HG-SR524	1.25
HG-SR1024	1.25
HG-SR1524	2
HG-SR2024	2
HG-SR3524	2
HG-SR5024	3.5
HG-SR7024	5.5
HG-JR53	1.25
HG-JR73	1.25
HG-JR103	2
HG-JR153	2
HG-JR203	2
HG-JR353	3.5

Servo motor	Wire size [mm^2]
HG-JR503	5.5
HG-JR703	8
HG-JR903	14
HG-JR701M	8
HG-JR11K1M	14
HG-JR15K1M	22
HG-JR22K1M	30
HG-JR30K1M	50
HG-JR37K1M	60
HG-JR601	8
HG-JR801	8
HG-JR12K1	14
HG-JR15K1	14
HG-JR20K1	30
HG-JR25K1	30
HG-JR30K1	38
HG-JR37K1	60
HG-JR534	1.25
HG-JR734	2
HG-JR1034	2
HG-JR1534	2
HG-JR2034	2
HG-JR3534	5.5
HG-JR5034	5.5
HG-JR7034	8
HG-JR9034	8

Servo motor	Wire size [mm^2]
HG-JR701M4	5.5
HG-JR11K1M4	8
HG-JR15K1M4	8
HG-JR22K1M4	14
HG-JR30K1M4	22
HG-JR37K1M4	22
HG-JR45K1M4	22
HG-JR55K1M4	38
HG-JR6014	5.5
HG-JR8014	5.5
HG-JR12K14	8
HG-JR15K14	8
HG-JR20K14	8
HG-JR25K14	8
HG-JR30K14	14
HG-JR37K14	22
HG-RR103	2
HG-RR153	2
HG-RR203 (Note)	3.5
HG-RR353 (Note)	5.5
HG-RR503 (Note)	5.5
HG-UR72	1.25
HG-UR152	2
HG-UR202	3.5
HG-UR352	5.5
HG-UR502	5.5

Note. Use a composite cable and others when combining with wiring of the electromagnetic brake power in the same cable.

App. 7 Crimping connector for CNP3_

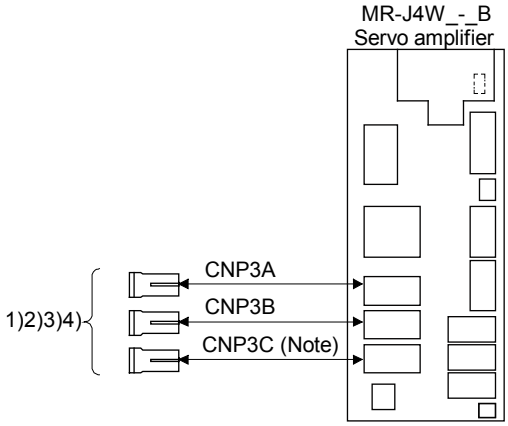

Note. This figure shows the 3-axis servo amplifier.

No.	Name	Model	Description	Application
1)	Connector set	MR-J3WCNP3-DL	The connector set is used for connecting to the servo amplifier directly using MR-PWS1CBL_M-_. For CNP3A/CNP3B/CNP3C Receptacle housing: F35FDC-04V-K Receptacle contact: LF3F-41GF-P2.0 (JST) Applicable wire Wire size: 0.75 mm^2 (AWG 19) to 1.25 mm^2 (AWG 16) Insulator OD: 1.8 mm to 2.8 mm The crimping tool (YRF-880) is required.	Quantity: 1 For thin wire
2)	Connector set	MR-J3WCNP3-DL-20P		Quantity: 20 For thin wire
3)	Connector set	MR-J3WCNP3-D2L	The connector set is used for connecting to the servo amplifier directly without using MR-PWS1CBL_M-_. For CNP3A/CNP3B/CNP3C Receptacle housing: F35FDC-04V-K Receptacle contact: BF3F-71GF-P2.0 (JST) Applicable wire Wire size: 1.25 mm^2 (AWG 16) to 2.0 mm^2 (AWG 14) Insulator OD: 2.4 mm to 3.4 mm The crimping tool (YRF-1070) is required.	Quantity: 1 For thick wire
4)	Connector set	MR-J3WCNP3-D2L-20P		Quantity: 20 For thick wire

App. 8 Connector dimensions

The connector dimensions for wiring the servo motor are shown below.

(1) TE Connectivity
2174053-1

[Unit: mm]

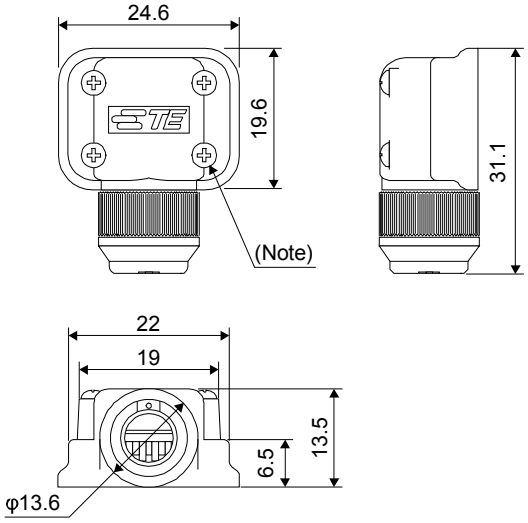

Note. The recommended screw tightening torque is 0.1 N•m.

Crimping tool: 1596970-1 (for ground clip)
1596847-1 (for receptacle contact)

(2) JAE
JN4FT02SJ1-R

[Unit: mm]

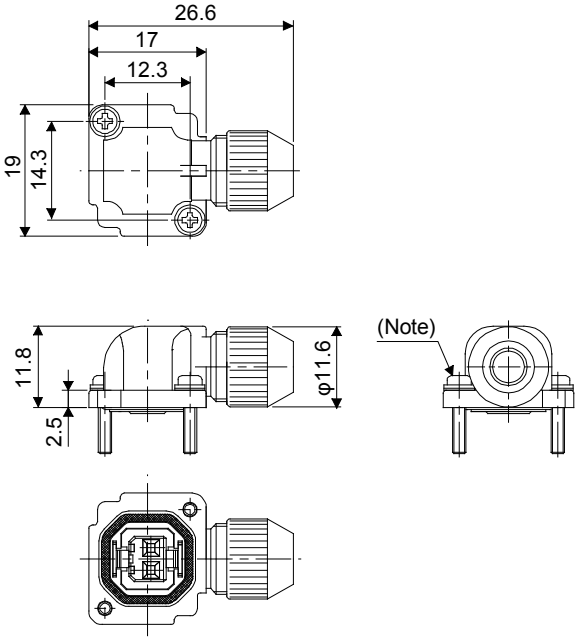

Note. The recommended screw tightening torque is 0.2 N•m.

Crimping tool: CT170-14-TMH5B

KN4FT04SJ1-R

[Unit: mm]

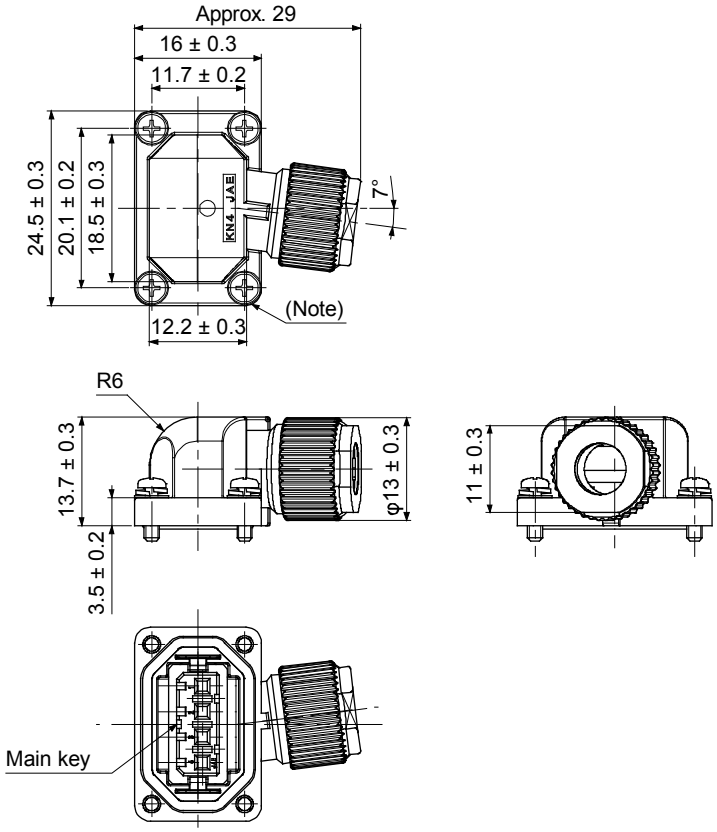

Note. The recommended screw tightening torque is 0.2 N•m.

Crimping tool: CT170-14-TMH5B

(3) DDK

(a) CMV1-SP10S-M_/CMV1-SP2S-_

Refer to section 3.3 for details of crimping tools.

[Unit: mm]

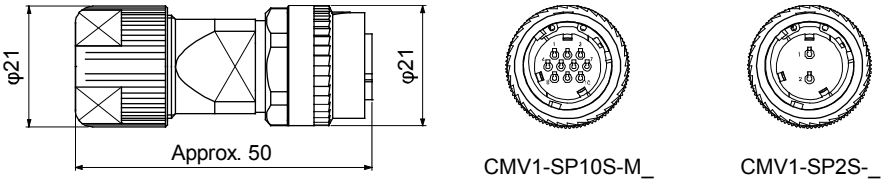

(b) CMV1-AP10S-M_/CMV1-AP2S-_
Refer to section 3.3 for details of crimping tools.

[Unit: mm]

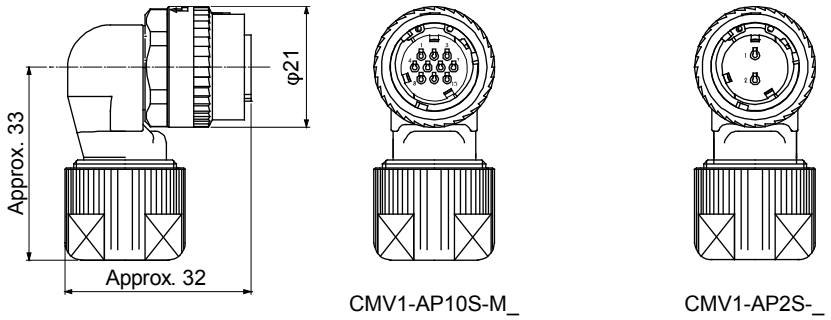

(c) CE05-6A_-_SD-D-BSS

[Unit: mm]

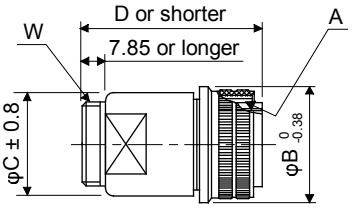

Model	A	B	C	D	W
CE05-6A18-10SD-D-BSS	1 1/8-18UNEF-2B	34.13	32.1	57	1-20UNEF-2A
CE05-6A22-22SD-D-BSS	1 3/8-18UNEF-2B	40.48	38.3	61	1 3/16-18UNEF-2A
CE05-6A32-17SD-D-BSS	2-18UNS-2B	56.33	54.2	79	1 3/4-18UNS-2A

(d) CE05-8A_-_SD-D-BAS

[Unit: mm]

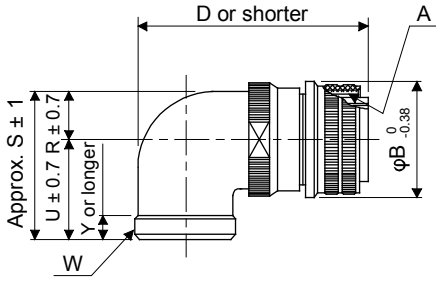

Model	A	B	D	W	R	U	S	Y
CE05-8A18-10SD-D-BAS	1 1/8-18UNEF-2B	34.13	69.5	1-20UNEF-2A	13.2	30.2	43.4	7.5
CE05-8A22-22SD-D-BAS	1 3/8-18UNEF-2B	40.48	75.5	1 3/16-18UNEF-2A	16.3	33.3	49.6	7.5
CE05-8A32-17SD-D-BAS	2-18UNS-2B	56.33	93.5	1 3/4-18UNS-2A	24.6	44.5	61.9	8.5

(e) CE3057-_A-_-D

[Unit: mm]

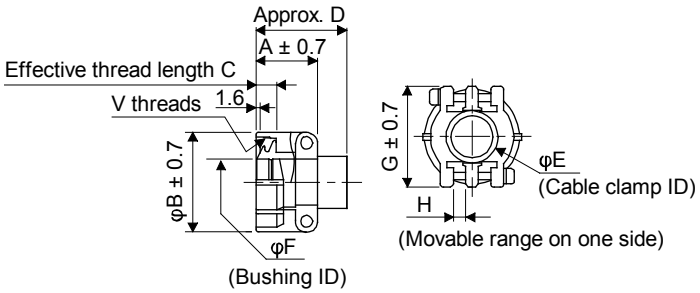

Model	Shell size	A	B	C	D	E	F	G	H	V	Bushing	Cable OD
CE3057-10A-1-D	18	23.8	30.1	10.3	41.3	15.9	14.1	31.7	3.2	1-20UNEF-2B	CE3420-10-1	10.5 to 14.1
CE3057-10A-2-D							11.0				CE3420-10-2	8.5 to 11
CE3057-12A-1-D	22	23.8	35	10.3	41.3	19	16.0	37.3	4.0	1 3/16-18UNEF-2B	CE342012-1	12.5 to 16
CE3057-12A-2-D							13.0				CE342012-2	9.5 to 13
CE3057-20A-1-D	32	27.8	51.6	11.9	43	31.7	23.8	51.6	6.3	1 3/4-18UNS-2B	CE3420-20-1	22 to 23.8

(f) D/MS3106B_-_S

[Unit: mm]

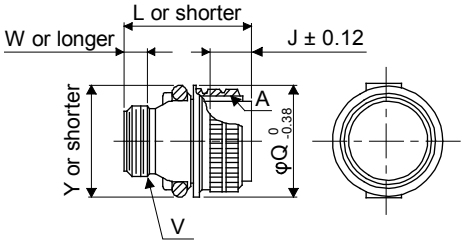

Model	A	J	L	Q	V	W	Y
D/MS3106B18-10S	1 1/8-18UNEF	18.26	52.37	34.13	1-20UNEF	9.53	42
D/MS3106B22-22S	1 3/8-18UNEF	18.26	56.57	40.48	1 3/16-18UNEF	9.53	50
D/MS3106B32-17S	2-18UNS	18.26	61.92	56.33	1 3/4-18UNS	11.13	66

(g) D/MS3108B_-_S

[Unit: mm]

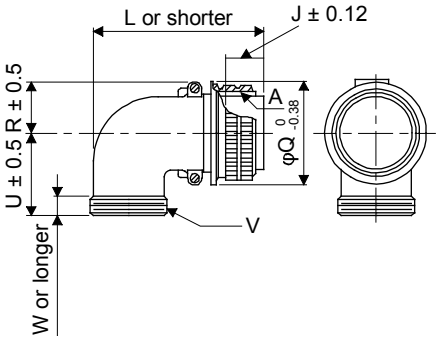

Model	A	J	L	Q	R	U	V	W
D/MS3108B18-10S	1 1/8-18UNEF	18.26	68.27	34.13	20.5	30.2	1-20UNEF	9.53
D/MS3108B22-22S	1 3/8-18UNEF	18.26	76.98	40.48	24.1	33.3	1 3/16-18UNEF-2A	9.53
D/MS3108B32-17S	2-18UNS	18.26	95.25	56.33	32.8	44.4	1 3/4-18UNS	11.13

(h) D/MS3057-_A

[Unit: mm]

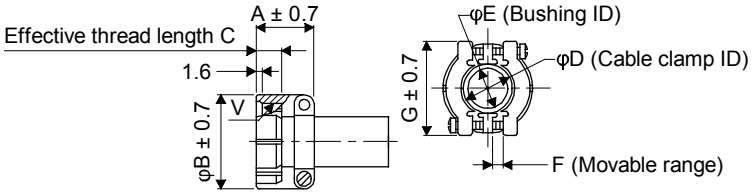

Model	Shell size	A	B	C	D	E	F	G	V	Bushing
D/MS3057-10A	18	23.8	30.1	10.3	15.9	14.3	3.2	31.7	1-20UNEF	AN3420-10
D/MS3057-12A	22	23.8	35.0	10.3	19.0	15.9	4.0	37.3	1 3/16-18UNEF-2A	AN3420-12
D/MS3057-20A	32	27.8	51.6	11.9	31.7	23.8	6.3	51.6	1 3/4-18UNS	AN3420-20

(i) CMV1S-SP10S-M_/CMV1S-SP2S-_
Refer to section 3.3 for details of crimping tools.

[Unit: mm]

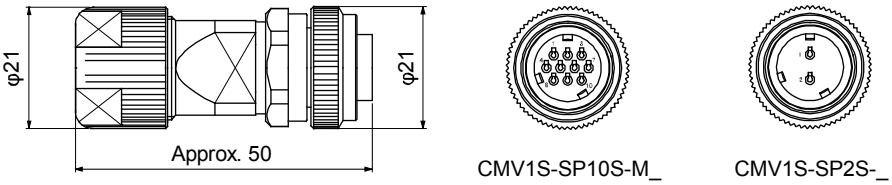

(j) CMV1S-AP10S-M_/CMV1S-AP2S-_
Refer to section 3.3 for details of crimping tools.

[Unit: mm]

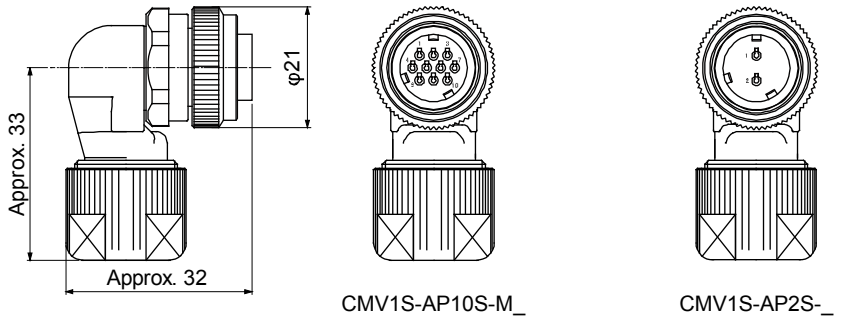

(k) CE05-6A32-17SD-D

[Unit: mm]

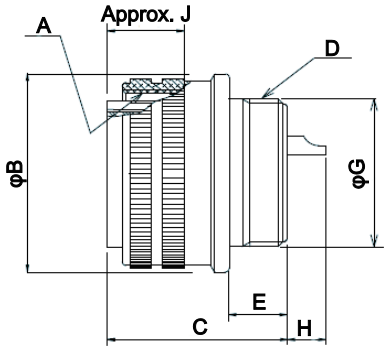

Model	A	B	C	D	E	G	H	J
CE05-6A32-17SD-D	2-18UNS-2B	56.33	37.0	1 7/8-16UN-2A	13.14	45.3	9.2	19.4

App. 9 HG-JR22K1M(4) appearance change

The appearance of the HG-JR22K1M(4) servo motor has been changed since September 2014. The following shows the terminal box detail diagram and dimensions before change.

(1) Terminal box detail diagram (HG-JR22K1M(4))

[Unit: mm]

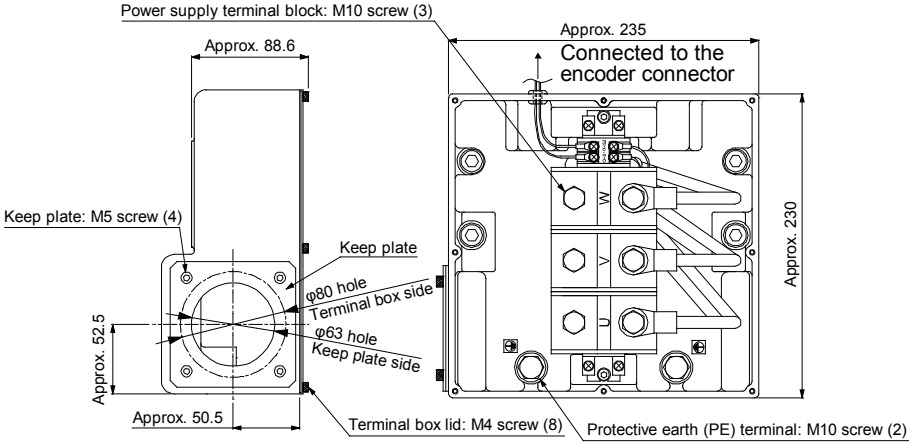

(2) Dimensions

Model	Output [kW]	Moment of inertia J [× 10^{-4} kg•m^2]	Mass [kg]
HG-JR22K1M	22	489	120
HG-JR22K1M4			

[Unit: mm]

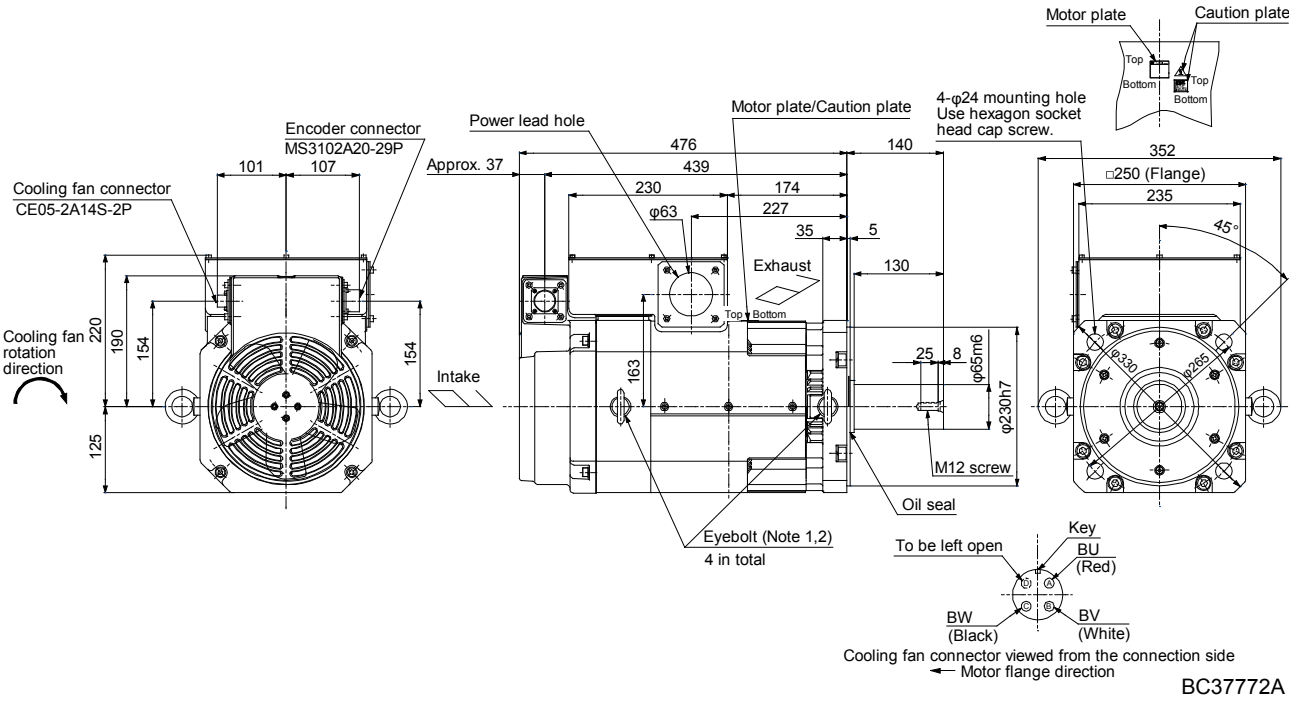

Note 1. When the motor is used without the eyebolt, plug the threaded hole with a bolt of M12 × 20 or less.
2. An angle adjusting washer is inserted into the eyebolt.

App. 10 Fabrication of the encoder cable

POINT
●It is recommended to use options indicated in section 5.1 for the encoder cable. ●When fabricating an encoder cable, use recommended products in chapter 3 to chapter 5.

When you fabricate an encoder cable, the descriptions in this appendix should be noted to ensure reliability of communication.

Cable fabrication

Connector selection

(1) Selection of connectors
- Check the cable clamp size to select a connector indicated in chapter 3 and chapter 4.
- Obtain the specification and wiring guide of the connector from the manufacturer.
- Purchase an assembly jig or others as necessary.

Cable selection

(2) Selection of cables
- Select a recommended wire or equivalent one indicated in chapter 5.
- Select a shielded twisted pair cable.
- Select a cable having a diameter suitable to clamp to the connector cable clamp.
- Select a cable whose length, diameter, and bending life are appropriate.

Cable assembly

(3) Assembly of the cable
- Check the wiring guide of the connector manufacturer to connect the connector properly.
- Check internal wiring described in chapter 5 to connect it properly.
- Perform a shielding process on the encoder cable properly.
- Do not connect anything to unused pins.
- For CN2, CN2A, CN2B, and CN2C side connectors, connect the external conductor of the shielded cable to the ground plate and fix it to the connector shell.
- For the servo motor-side connector, connect the external conductor of the shielded cable to the SHD terminal.
- Check if the pin arrangement is correct.
- Connect the twisted pair cable in correct combination.
- Check if the number of pairs of P5/LG wirings connected in parallel is correct.
- Fix the cable to the connector with a proper clamping torque.

Inspection

(4) Inspection
- After assembly, perform conduction, insulation, and other inspections to check if the connection is correct.
- Check the surface for scratches and contamination.
- Check the connector pins for a distortion, bending, dent, etc.
- Check the connector pins for foreign matter adhesion, contamination, and discoloration.

Completion

REVISION

*The manual number is given on the bottom left of the back cover.

Print Data	*Manual Number	Revision	
Mar. 2012	SH(NA)030113-A	First edition	
Jun. 2012	SH(NA)030113-B	4. Additional instructions	The part of table is changed.
		(1) Transportation and installation	
		Section 2.2	The sentences are added to CAUTION.
		Section 2.6 (2)	The sentences are added.
		Section 5.1.2	The sentences of Note are changed.
		Section 6.3.1	The part of table is changed.
		Section 6.6.1 (2)	The part of table is changed.
		Section 6.6.2 (2)	The part of table is changed.
		Section 7.3.1	The part of table is changed.
		Section 7.6.1 (2)	The part of table is changed.
		Section 7.6.2 (2)	The part of table is changed.
Feb. 2013	SH(NA)030113-C	4. Additional instructions	The part of table is changed.
		(1) Transportation and installation	
		Section 1.1	The part of diagram is changed.
		Section 1.2 (3) (4)	Addition
		Section 2.1 (1)	The part of table is changed.
		Section 2.2 to Section 2.10	A part is newly added, construction of sentences is changed.
		Section 3.1 (3) to (5)	Addition
		Section 3.4	Addition
		Chapter 4	POINT is added.
		Section 4.2.2	A part is newly added, construction of sentences is changed.
		Section 4.3	A part is newly added, construction of sentences is changed.
		Section 4.4	A part is newly added, construction of sentences is changed.
		Chapter 5	POINT is added.
		Section 5.1.1 (2)	The part of diagram is changed.
		Section 5.1.1 (3)	Addition
		Section 5.1.2	The part of table is changed.
		Section 5.2 (2)	POINT is changed.
		Section 5.2 (4)	The part of diagram is changed.
		Section 5.2 (6)	Addition
		Section 5.5	The part of table is changed.
		Section 6.2	The part of table is changed.
		Section 6.3.1	The part of table is changed.
		Section 6.8	The part of diagram is changed.
		Section 7.1	The part of diagram is changed.
			The sentences of Note 1 are changed.
		Section 7.2	The part of table is changed.
		Section 7.3.1	The part of table is changed.
		Section 7.3.2 (2)	Addition
		Section 7.4	The part of table is changed.
		Section 7.5	The part of table is changed.
		Section 7.6	The part of table is changed.
		Section 7.7	The part of table is changed.
			The part of diagram is changed.
		Chapter 8	Addition
		Chapter 9	Addition
		Chapter 10	Addition
		Appendix 1	The part of table is changed.
		Appendix 2	The part of table is changed.

Print Data	*Manual Number	Revision
Feb. 2013	SH(NA)030113-C	Appendix 4 The part of table is changed. Appendix 5.9 (8) to (10) Some numbers are changed. Appendix 6 The part of table is changed.
Jun. 2013	SH(NA)030113-D	"The following servo amplifiers will be available in the future. All specifications of followings may be changed without notice. MR-J4-_B(4)-RJ020" is deleted.
Aug. 2013	SH(NA)030113-E	Section 4.4 The part of table is changed. Section 8.2 The part of table is changed.
Oct. 2013	SH(NA)030113-F	MR-BT6VCBL03M is added. Section 1.1 The sentences are added. Section 5.1.1 The part of diagram is changed. Section 5.1.2 The part of table is changed. Section 5.2 (7) Addition Section 6.4 The sentences of Note 7 are added. Section 7.4 The sentences of Note 7 are added. Section 8.4 The sentences of Note 7 are added. Section 9.4 The sentences of Note 7 are added. Section 10.4 The sentences of Note 7 are added.
Mar. 2014	SH(NA)030113-G	1-phase 100 V AC of servo amplifier power supply input is added to torque characteristics of HG-MR and HG-KR servo motors. Section 4.4 The part of table is changed. Section 6.2 The part of table is changed. Section 6.3.2 The part of graph is changed. Section 7.2 (2) The part of table is changed. Section 8.2 The part of table is changed. Appendix 3.1 The sentences are added.
Jan. 2015	SH(NA)030113-H	HG-JR701M(4), HG-JR30K1M(4), HG-JR37K1M(4), HG-JR45K1M4, HG-JR55K1M4, and HG-JR 1000 r/min series are added. 1. To prevent electric shock, note the following The part of sentences is changed. 4. Additional instructions (1) Transportation and installation The part of table is changed. 4. Additional instructions (2) Wiring The part of sentences is changed. 4. Additional instructions (4) Usage The part of sentences is changed. Section 1.1 The diagram is changed. Section 1.2 (2) The title is changed. Section 1.2 (3) The title is changed. The diagram is changed. Section 2.8 The part of sentences is changed. The sentences are added to CAUTION. Section 2.9 The part of table is changed. Section 3.1 (3) The part of sentences is changed. The part of diagram is changed. The part of table is changed. Section 3.4 The part of diagram is changed. The part of table is changed. Chapter 4 The part of sentences is changed. The sentences are added to POINT. Section 4.2.2 (2) (b) The part of table is changed. Section 4.2.2 (3) The part of table is changed. Section 4.2.2 (4) The diagram is changed. Section 4.3 (3) The table are added. Section 4.4 The sentences are added to POINT. Chapter 5 The part of sentences is changed. The sentences are added to CAUTION. The sentences are added to POINT. Section 5.1.1 (2) The title is changed. Section 5.1.1 (3) The title is changed. The diagram is changed.

Print Data	*Manual Number	Revision	
Jan. 2015	SH(NA)030113-H	Section 5.1.2	The part of table is changed.
		Section 5.2 (1) (a)	The sentences are added.
		Section 5.2 (2) (a)	The sentences are added.
		Section 5.2 (5) (a)	The sentences are added.
		Section 5.2 (6)	The part of sentences is changed.
		Section 5.2 (6) (a)	The sentences are added.
		Section 5.2 (6) (b)	The sentences of Note 2 are changed.
		Section 6.3.1	The sentences are added.
		Section 6.3.2	The part of sentences is changed.
		Section 6.6	The part of sentences is changed.
		Section 7.3.1	The sentences are added.
		Section 7.3.2	The part of sentences is changed.
		Section 7.6	The part of sentences is changed.
		Chapter 8	The part of sentences is changed.
		Section 8.1	The part of diagram is changed.
		Section 8.2	The title is changed.
			The table are added.
		Section 8.3.1	The part of table is changed.
			The table are added.
			The sentences are added.
		Section 8.3.2	The part of sentences is changed.
			The diagram are added.
		Section 8.4	The part of sentences is changed.
			The part of table is changed.
		Section 8.5	The part of table is changed.
			The diagram are added.
		Section 8.6	The part of table is changed.
		Section 8.7	The part of table is changed.
		Section 8.8.1	The diagram is changed.
		Section 8.8.2	The diagram are added.
			The part of table is changed.
			The part of diagram is changed.
		Section 8.8.3	The diagram are added.
			The part of table is changed.
			The part of diagram is changed.
		Section 9.3.1	The sentences are added.
		Section 9.3.2	The part of sentences is changed.
		Section 10.3.1	The sentences are added.
		Section 10.3.2	The part of sentences is changed.
		Appendix 1	The part of table is changed.
		Appendix 4 (1)	The part of table is changed.
		Appendix 4 (2) (c)	The table are added.
		Appendix 6	The part of table is changed.
		Appendix 9	Addition
Apr. 2015	SH(NA)030113-J	Servo motors with functional safety and HG-AK series servo motor are added.	
		4. Additional instructions	Partially added.
		Section 1.1 (2)	Added.
		Section 1.2 (4)	Added.
		Section 1.5	Added.
		Section 2.1	Partially added.
		Section 2.8	CAUTION is added.
		Section 3.1 (6)	Added.
		Section 3.2	Partially changed.
		Section 3.4	Partially added.
		Section 4.1	Partially added.
		Section 4.2.2	Partially changed.
		Section 4.2.3	Added.
		Section 4.3 (6)	Added.
		Section 4.4	Partially added.
		Section 5.1.1 (4)	Added.
		Section 5.1.2	Partially added.

Print Data	*Manual Number	Revision	
Apr. 2015	SH(NA)030113-J	Section 5.2 (8)	Added.
		Section 5.4	Added.
		Section 5.5	Partially changed.
		Section 5.6	Partially added.
		Section 6.1	Partially added.
		Section 7.1	Partially added.
		Section 8.1	Partially added.
		Chapter 11	Added.
		App. 1	Partially added.
		App. 4 (1) (2)	Partially added.
		App. 8	Partially changed.
Sep. 2015	SH(NA)030113-K	Torque characteristic of 1-phase 200 V AC is added, and operable environment is changed to maximum altitude of 2000 m above sea level.	
		2. To prevent fire, note the following	Partially added.
		4. Additional instructions	Partially added and partially changed.
		Section 1.2	Partially changed.
		Section 1.5	The sentences and tables are changed.
		Section 2.10	Added.
		Section 2.11	The section number is changed from section 2.10.
		Section 4.2	Partially changed.
		Section 5.1	Partially added.
		Section 5.2	Partially changed.
		Section 5.4	Partially added and partially changed.
		Section 6.3.1	Partially added and partially changed.
		Section 7.3.1	Partially added and partially changed.
		Section 7.3.2	Partially added and partially changed.
		Section 7.6.1	Partially added.
		Section 8.2	Partially changed.
		Section 8.3.1	Partially added and partially changed.
		Section 8.3.2	Partially added and partially changed.
		Section 9.3.1	Partially added and partially changed.
		Section 9.3.2	Partially added.
		Section 10.3.1	Partially added and partially changed.
		Section 10.3.2	Partially added.
		Section 11.3.1	Partially changed.
		Section 11.4	Partially changed.
		Section 11.6.1	Partially changed.
		Section 11.6.2	Partially changed.
		App. 2	Partially changed.
		App. 4	Partially changed.
		App. 10	Added.
Feb. 2016	SH(NA)030113-L	MR-J4-GF is added.	
		Front cover	The sentences are added.
		2. To prevent fire, note the following	Partially changed.
		4. Additional instructions	Partially changed.
		Section 1.1	Partially changed.
		Section 4.4	Model names are added.
		Section 5.2	Partially added.
		Section 6.2	Model names are added.
		Section 7.2	Model names are added.
		Section 8.2	POINT is added, and model names are added.
		Section 8.3.2	Partially added.
		Section 9.2	Model names are added.
		Section 10.2	Model names are added.
		App. 2	Partially changed.

This manual confers no industrial property rights or any rights of any other kind, nor does it confer any patent licenses. Mitsubishi Electric Corporation cannot be held responsible for any problems involving industrial property rights which may occur as a result of using the contents noted in this manual.

© 2012 MITSUBISHI ELECTRIC CORPORATION

Country/Region	Sales office	Tel/Fax
USA	Mitsubishi Electric Automation, Inc. 500 Corporate Woods Parkway, Vernon Hills, IL 60061, U.S.A.	Tel : +1-847-478-2100 Fax : +1-847-478-2253
Mexico	Mitsubishi Electric Automation, Inc. Mexico Branch Mariano Escobedo #69, Col. Zona Industrial, Tlalnepantla Edo. Mexico, C.P.54030	Tel : +52-55-3067-7500 Fax : –
Brazil	Mitsubishi Electric do Brasil Comercio e Servicos Ltda. Avenida Adelino Cardana, 293, 21 andar, Bethaville, CEP 06401-147, Barueri SP, Brazil	Tel : +55-11-4689-3000 Fax : +55-11-4689-3016
Germany	Mitsubishi Electric Europe B.V. German Branch Mitsubishi-Electric-Platz 1, 40882 Ratingen, Germany	Tel : +49-2102-486-0 Fax : +49-2102-486-1120
UK	Mitsubishi Electric Europe B.V. UK Branch Travellers Lane, UK-Hatfield, Hertfordshire, AL10 8XB, U.K.	Tel : +44-1707-28-8780 Fax : +44-1707-27-8695
Italy	Mitsubishi Electric Europe B.V. Italian Branch Centro Direzionale Colleoni - Palazzo Sirio, Viale Colleoni 7, 20864 Agrate Brianza (Milano), Italy	Tel : +39-039-60531 Fax : +39-039-6053-312
Spain	Mitsubishi Electric Europe B.V. Spanish Branch Carretera de Rubi, 76-80-Apdo. 420, 08190 Sant Cugat del Valles (Barcelona), Spain	Tel : +34-935-65-3131 Fax : +34-935-89-1579
France	Mitsubishi Electric Europe B.V. French Branch 25, Boulevard des Bouvets, 92741 Nanterre Cedex, France	Tel : +33-1-55-68-55-68 Fax : +33-1-55-68-57-57
Czech Republic	Mitsubishi Electric Europe B.V. Czech Branch Avenir Business Park, Radlicka 751/113e, 158 00 Praha 5, Czech Republic	Tel : +420-251-551-470 Fax : +420-251-551-471
Poland	Mitsubishi Electric Europe B.V. Polish Branch ul. Krakowska 50, 32-083 Balice, Poland	Tel : +48-12-347-65-00 Fax : +48-12-630-47-01
Russia	Mitsubishi Electric (Russia) LLC St. Petersburg Branch Piskarevsky pr. 2, bld 2, lit “Sch”, BC “Benua”, office 720; 195027 St. Petersburg, Russia	Tel : +7-812-633-3497 Fax : +7-812-633-3499
Sweden	Mitsubishi Electric Europe B.V. (Scandinavia) Fjelievagen 8, SE-22736 Lund, Sweden	Tel : +46-8-625-10-00 Fax : +46-46-39-70-18
Turkey	Mitsubishi Electric Turkey A.S. Umraniye Branch Serifali Mahallesi Nutuk Sokak No:5, TR-34775 Umraniye / Istanbul, Turkey	Tel : +90-216-526-3990 Fax : +90-216-526-3995
UAE	Mitsubishi Electric Europe B.V. Dubai Branch Dubai Silicon Oasis, P.O.BOX 341241, Dubai, U.A.E.	Tel : +971-4-3724716 Fax : +971-4-3724721
South Africa	Adroit Technologies 20 Waterford Office Park, 189 Witkoppen Road, Fourways, South Africa	Tel : +27-11-658-8100 Fax : +27-11-658-8101
China	Mitsubishi Electric Automation (China) Ltd. Mitsubishi Electric Automation Center, No.1386 Hongqiao Road, Shanghai, China	Tel : +86-21-2322-3030 Fax : +86-21-2322-3000
Taiwan	SETSUYO ENTERPRISE CO., LTD. 6F, No.105, Wugong 3rd Road, Wugu District, New Taipei City 24889, Taiwan	Tel : +886-2-2299-2499 Fax : +886-2-2299-2509
Korea	Mitsubishi Electric Automation Korea Co., Ltd. 7F-9F, Gangseo Hangang Xi-tower A, 401, Yangcheon-ro, Gangseo-Gu, Seoul 07528, Korea	Tel : +82-2-3660-9510 Fax : +82-2-3664-8372/8335
Singapore	Mitsubishi Electric Asia Pte. Ltd. 307 Alexandra Road, Mitsubishi Electric Building, Singapore 159943	Tel : +65-6473-2308 Fax : +65-6476-7439
Thailand	Mitsubishi Electric Factory Automation (Thailand) Co., Ltd. 12th Floor, SV.City Building, Office Tower 1, No. 896/19 and 20 Rama 3 Road, Kwaeng Bangpongpang, Khet Yannawa, Bangkok 10120, Thailand	Tel : +66-2682-6522 to 6531 Fax : +66-2682-6020
Indonesia	PT. Mitsubishi Electric Indonesia Gedung Jaya 11th Floor, JL. MH. Thamrin No.12, Jakarta Pusat 10340, Indonesia	Tel : +62-21-3192-6461 Fax : +62-21-3192-3942
Vietnam	Mitsubishi Electric Vietnam Company Limited Unit 01-04, 10th Floor, Vincom Center, 72 Le Thanh Ton Street, District 1, Ho Chi Minh City, Vietnam	Tel : +84-8-3910-5945 Fax : +84-8-3910-5947
India	Mitsubishi Electric India Pvt. Ltd. Pune Branch Emerald House, EL-3, J Block, M.I.D.C., Bhosari, Pune - 411026, Maharashtra, India	Tel : +91-20-2710-2000 Fax : +91-20-2710-2100
Australia	Mitsubishi Electric Australia Pty. Ltd. 348 Victoria Road, P.O. Box 11, Rydalmere, N.S.W 2116, Australia	Tel : +61-2-9684-7777 Fax : +61-2-9684-7245

MELSERVO is a trademark or registered trademark of Mitsubishi Electric Corporation in Japan and/or other countries.
Cyclo is registered trademark of Sumitomo Heavy Industries.
All other product names and company names are trademarks or registered trademarks of their respective companies.

Warranty

1. Warranty period and coverage

We will repair any failure or defect hereinafter referred to as "failure" in our FA equipment hereinafter referred to as the "Product" arisen during warranty period at no charge due to causes for which we are responsible through the distributor from which you purchased the Product or our service provider. However, we will charge the actual cost of dispatching our engineer for an on-site repair work on request by customer in Japan or overseas countries. We are not responsible for any on-site readjustment and/or trial run that may be required after a defective unit are repaired or replaced.

[Term]

The term of warranty for Product is twelve (12) months after your purchase or delivery of the Product to a place designated by you or eighteen (18) months from the date of manufacture whichever comes first ("Warranty Period"). Warranty period for repaired Product cannot exceed beyond the original warranty period before any repair work.

[Limitations]

(1) You are requested to conduct an initial failure diagnosis by yourself, as a general rule.
It can also be carried out by us or our service company upon your request and the actual cost will be charged. However, it will not be charged if we are responsible for the cause of the failure.

(2) This limited warranty applies only when the condition, method, environment, etc. of use are in compliance with the terms and conditions and instructions that are set forth in the instruction manual and user manual for the Product and the caution label affixed to the Product.

(3) Even during the term of warranty, the repair cost will be charged on you in the following cases;
(i) a failure caused by your improper storing or handling, carelessness or negligence, etc., and a failure caused by your hardware or software problem
(ii) a failure caused by any alteration, etc. to the Product made on your side without our approval
(iii) a failure which may be regarded as avoidable, if your equipment in which the Product is incorporated is equipped with a safety device required by applicable laws and has any function or structure considered to be indispensable according to a common sense in the industry
(iv) a failure which may be regarded as avoidable if consumable parts designated in the instruction manual, etc. are duly maintained and replaced
(v) any replacement of consumable parts (battery, fan, smoothing capacitor, etc.)
(vi) a failure caused by external factors such as inevitable accidents, including without limitation fire and abnormal fluctuation of voltage, and acts of God, including without limitation earthquake, lightning and natural disasters
(vii) a failure generated by an unforeseeable cause with a scientific technology that was not available at the time of the shipment of the Product from our company
(viii) any other failures which we are not responsible for or which you acknowledge we are not responsible for

2. Term of warranty after the stop of production

(1) We may accept the repair at charge for another seven (7) years after the production of the product is discontinued. The announcement of the stop of production for each model can be seen in our Sales and Service, etc.

(2) Please note that the Product (including its spare parts) cannot be ordered after its stop of production.

3. Service in overseas countries

Our regional FA Center in overseas countries will accept the repair work of the Product. However, the terms and conditions of the repair work may differ depending on each FA Center. Please ask your local FA center for details.

4. Exclusion of loss in opportunity and secondary loss from warranty liability

Regardless of the gratis warranty term, Mitsubishi shall not be liable for compensation to:

(1) Damages caused by any cause found not to be the responsibility of Mitsubishi.

(2) Loss in opportunity, lost profits incurred to the user by Failures of Mitsubishi products.

(3) Special damages and secondary damages whether foreseeable or not, compensation for accidents, and compensation for damages to products other than Mitsubishi products.

(4) Replacement by the user, maintenance of on-site equipment, start-up test run and other tasks.

5. Change of Product specifications

Specifications listed in our catalogs, manuals or technical documents may be changed without notice.

6. Application and use of the Product

(1) For the use of our General-Purpose AC Servo, its applications should be those that may not result in a serious damage even if any failure or malfunction occurs in General-Purpose AC Servo, and a backup or fail-safe function should operate on an external system to General-Purpose AC Servo when any failure or malfunction occurs.

(2) Our General-Purpose AC Servo is designed and manufactured as a general purpose product for use at general industries.
Therefore, applications substantially influential on the public interest for such as atomic power plants and other power plants of electric power companies, and also which require a special quality assurance system, including applications for railway companies and government or public offices are not recommended, and we assume no responsibility for any failure caused by these applications when used
In addition, applications which may be substantially influential to human lives or properties for such as airlines, medical treatments, railway service, incineration and fuel systems, man-operated material handling equipment, entertainment machines, safety machines, etc. are not recommended, and we assume no responsibility for any failure caused by these applications when used.
We will review the acceptability of the abovementioned applications, if you agree not to require a specific quality for a specific application. Please contact us for consultation.

MODEL	MOTOR INSTRUCTIONMANUAL(3SYU)
MODEL CODE	1CW949

MITSUBISHI ELECTRIC CORPORATION

HEAD OFFICE : TOKYO BLDG MARUNOUCHI TOKYO 100-8310

This Instruction Manual uses recycled paper.

SH(NA)030113-L(1602)MEE Printed in Japan

Specifications are subject to change without notice.