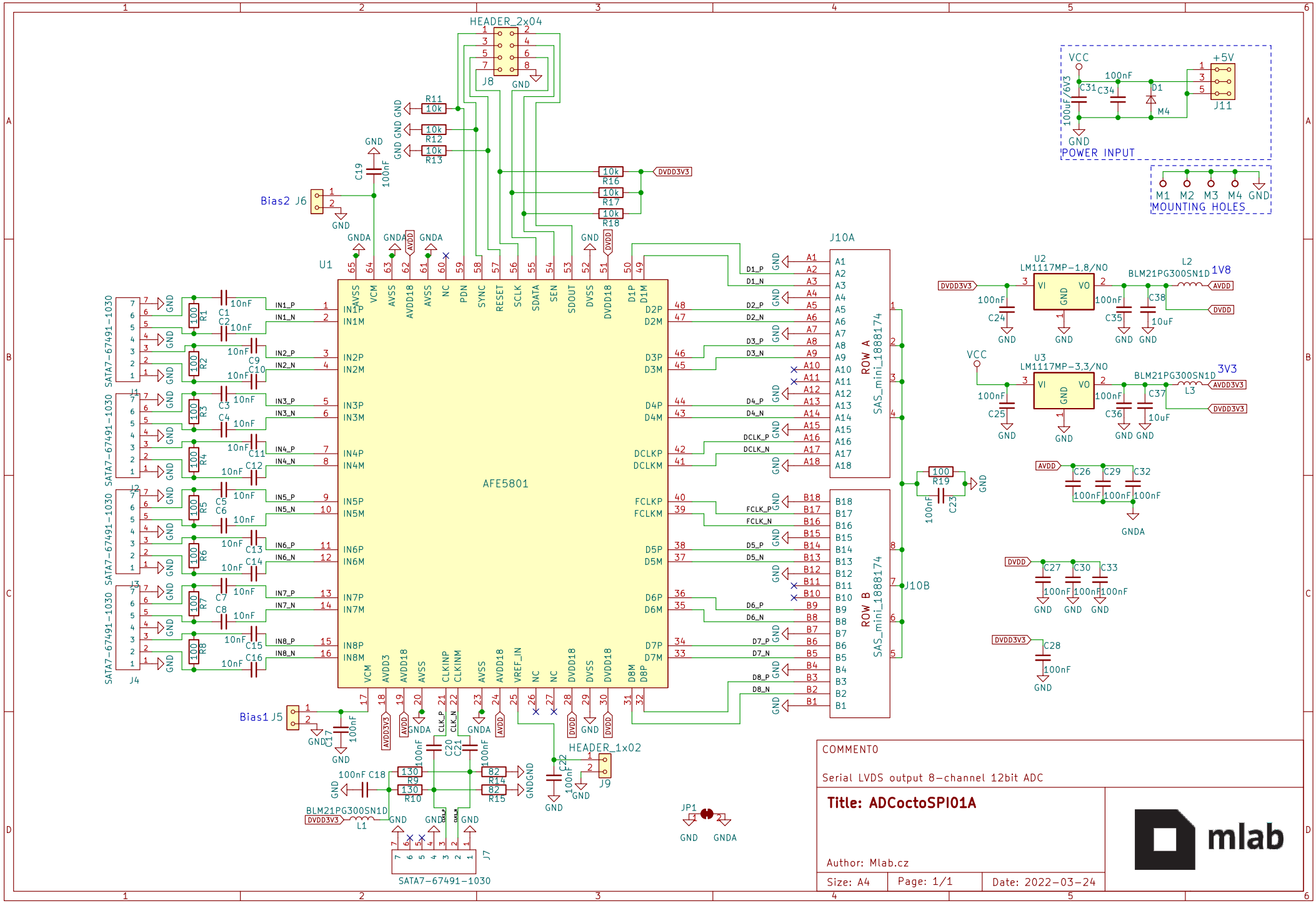
HEADER_2x04
J8
U1
AFE5801
J10A
J10B
ROW A
ROW B
SAS_mini_1888174
SATA7-67491-1030
J4
J7
Bias1 J5
Bias2 J6
HEADER_1x02
J9
JP1
U2
LM1117MP-1,8/NO
U3
LM1117MP-3,3/NO
BLM21PG300SN1D
L1
L2
L3
1V8
3V3
VCC
+5V
J11
POWER INPUT
M1 M2 M3 M4 GND
MOUNTING HOLES
COMMENTO
Serial LVDS output 8-channel 12bit ADC
Title: ADCoctoSPI01A
Author: Mlab.cz
Size: A4
Page: 1/1
Date: 2022-03-24
mlab