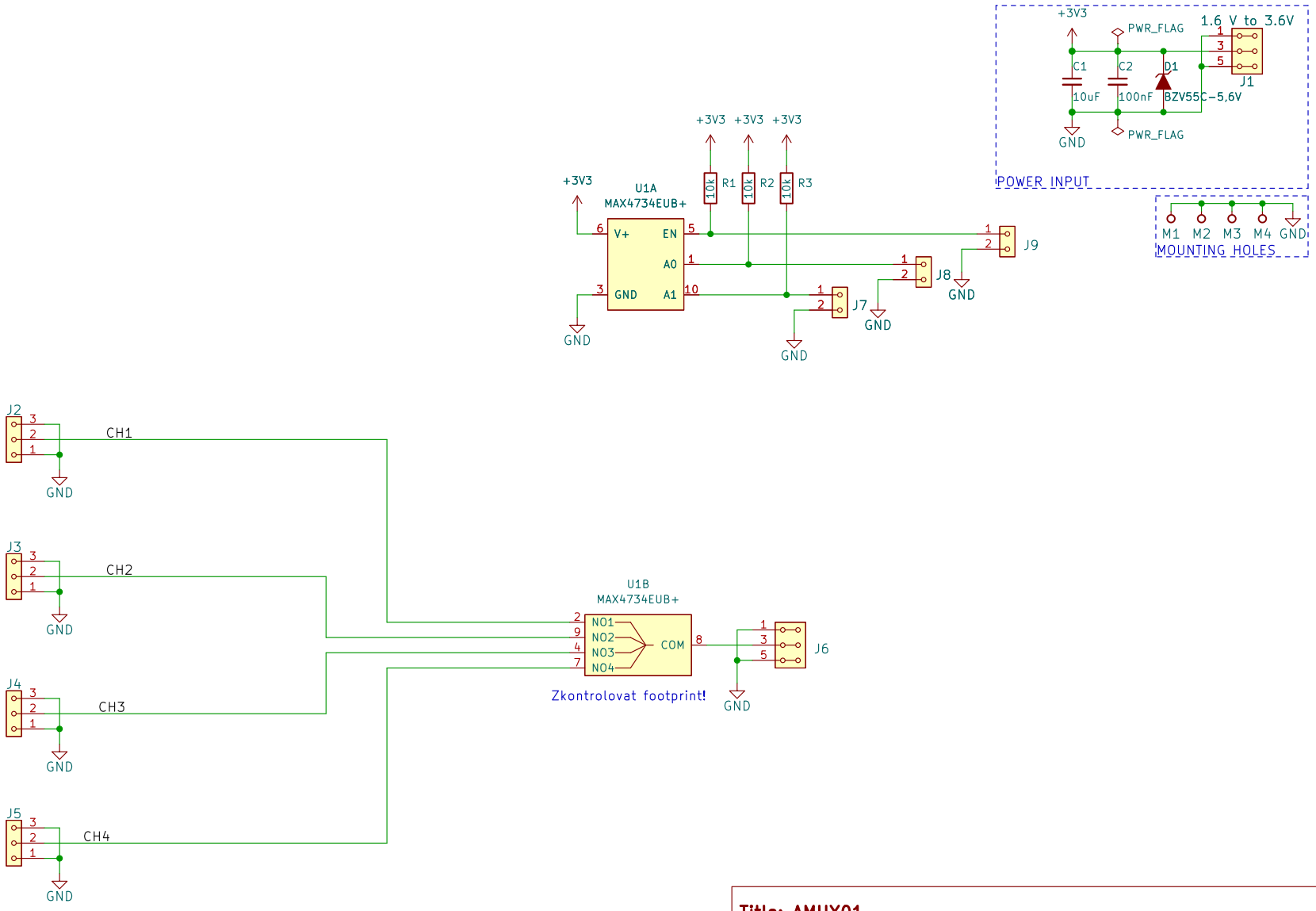

Title: AMUX01

Four channel analog multiplexer
with single-sided output

kaklik@mlab.cz

Author: Mlab www.mlab.cz

Size: A4	Page: 1/1	Date: %d. %m. %Y

mlab