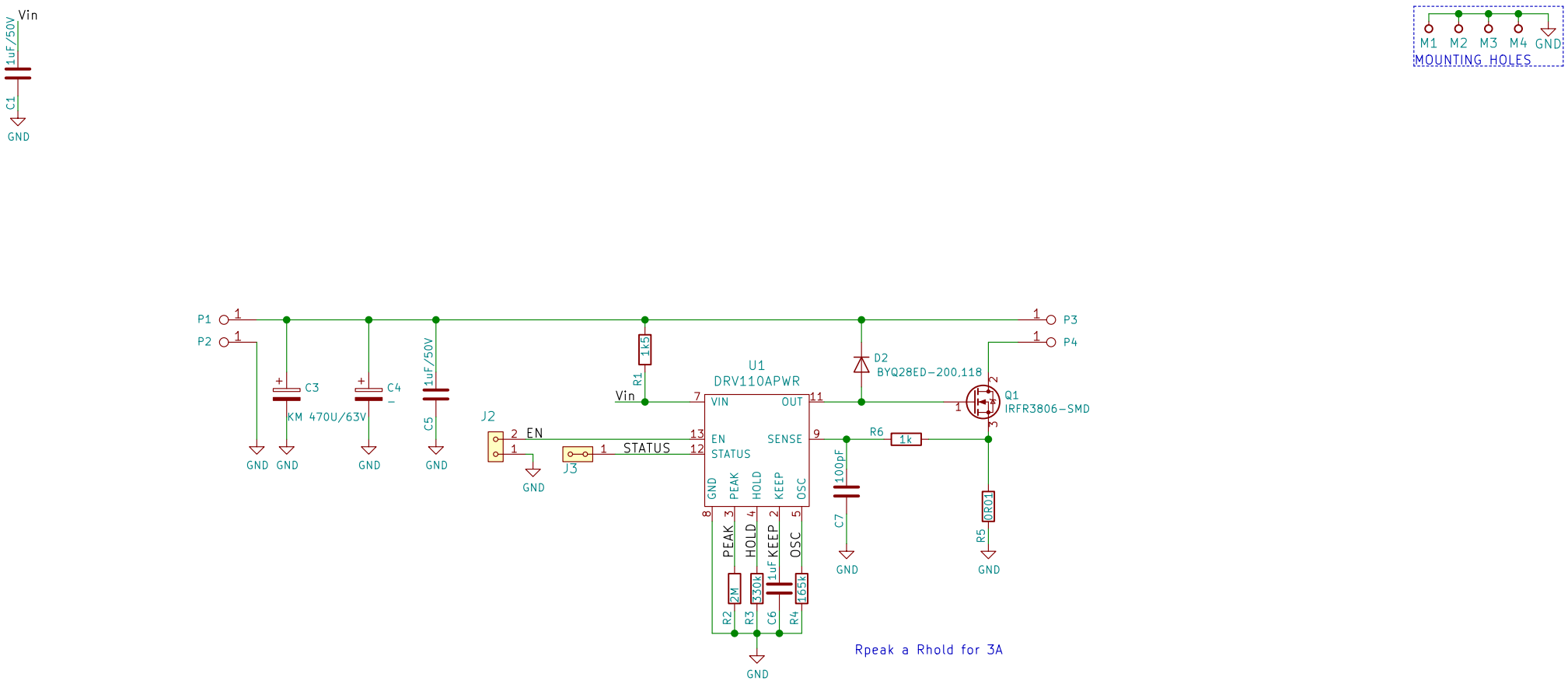

VERSION
Short description
Two lines are maximum
nickname <email@example.com>

Title: NAME

Author: Mlab www.mlab.cz

Size: A4	Page: 1/1	Date: %F