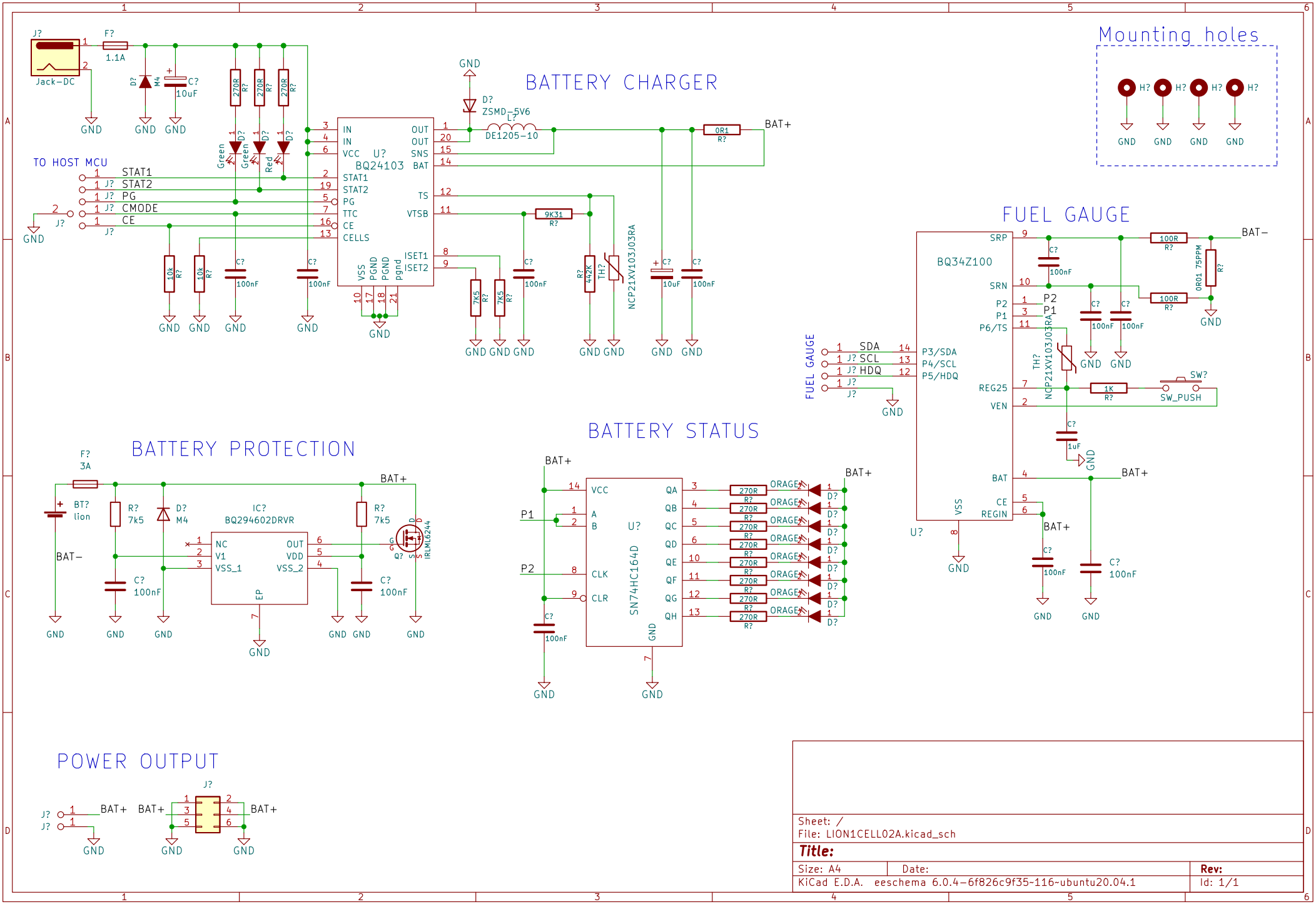
BATTERY CHARGER
BQ24103
U?
IN
IN
VCC
OUT
OUT
SNS
BAT
STAT1
STAT2
PG
TTC
CE
CELLS
TS
VTSB
ISET1
ISET2
VSS
PGND
PGND
pgnd
J?
Jack-DC
F?
1.1A
D?
M4
C?
10uF
270R
R?
Green
Red
TO HOST MCU
STAT1
STAT2
PG
CMODE
CE
10k
100nF
GND
D?
ZSMD-5V6
L?
DE1205-10
0R1
BAT+
9K31
7K5
442K
TH?
NCP21XV103J03RA
10uF
FUEL GAUGE
BQ34Z100
SRP
SRN
P2
P1
P6/TS
REG25
VEN
BAT
CE
REGIN
VSS
P3/SDA
P4/SCL
P5/HDQ
SDA
SCL
HDQ
100R
0R01 75PPM
1K
SW?
SW_PUSH
1uF
BAT-
BATTERY PROTECTION
F?
3A
BT?
lion
R?
7k5
D?
M4
IC?
BQ294602DRVR
NC
V1
VSS_1
OUT
VDD
VSS_2
EP
IRLML6244
Q?
BATTERY STATUS
SN74HC164D
VCC
A
B
CLK
CLR
QA
QB
QC
QD
QE
QF
QG
QH
ORAGE
Mounting holes
H?
POWER OUTPUT
J?
BAT+
Sheet: /
File: LION1CELL02A.kicad_sch
Title:
Size: A4
Date:
Rev:
KiCad E.D.A. eeschema 6.0.4-6f826c9f35~116~ubuntu20.04.1
Id: 1/1