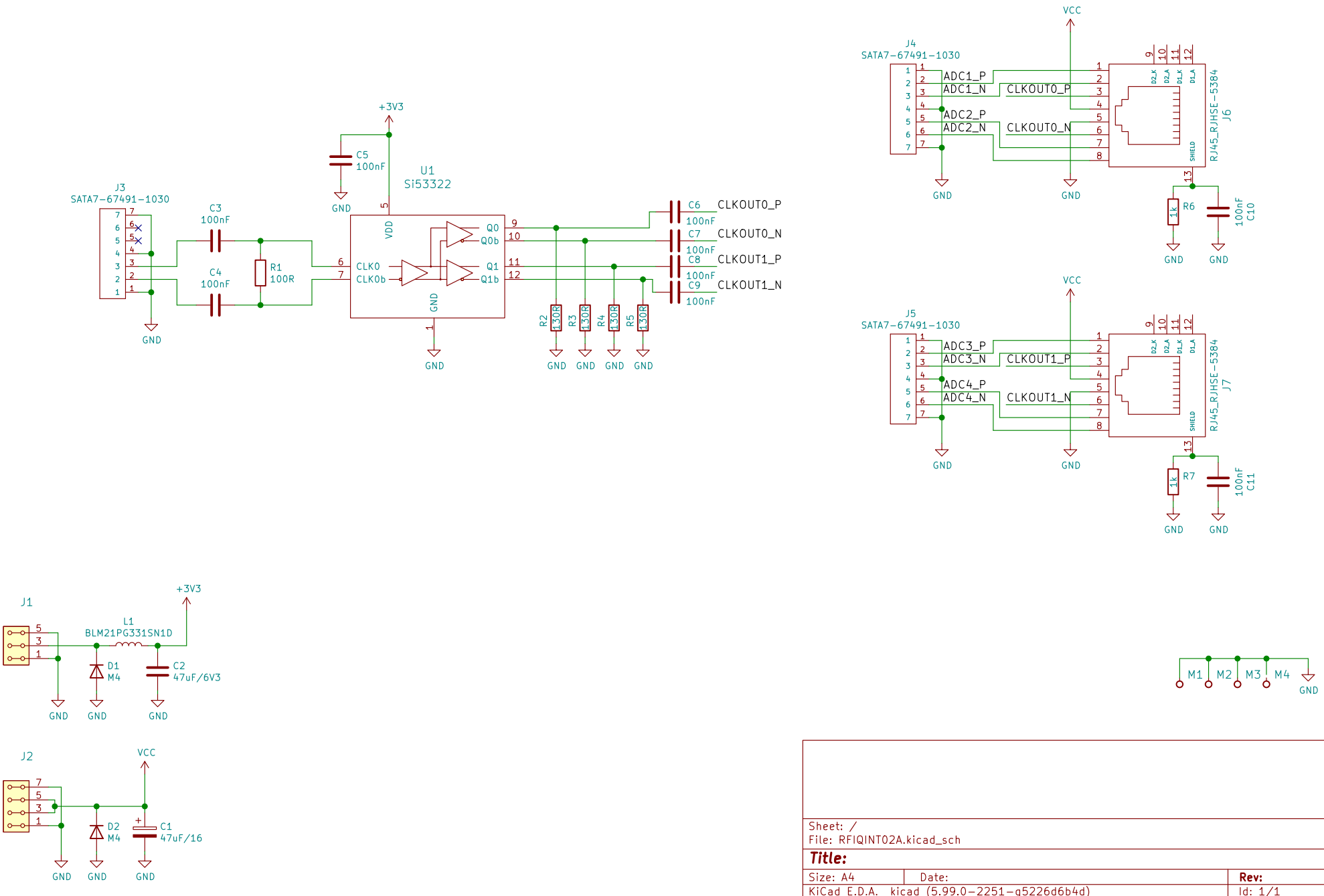

Sheet: /
File: RFIQINT02A.kicad_sch

Title:

Size: A4	Date:	**Rev:**
KiCad E.D.A. kicad (5.99.0-2251-g5226d6b4d)		Id: 1/1