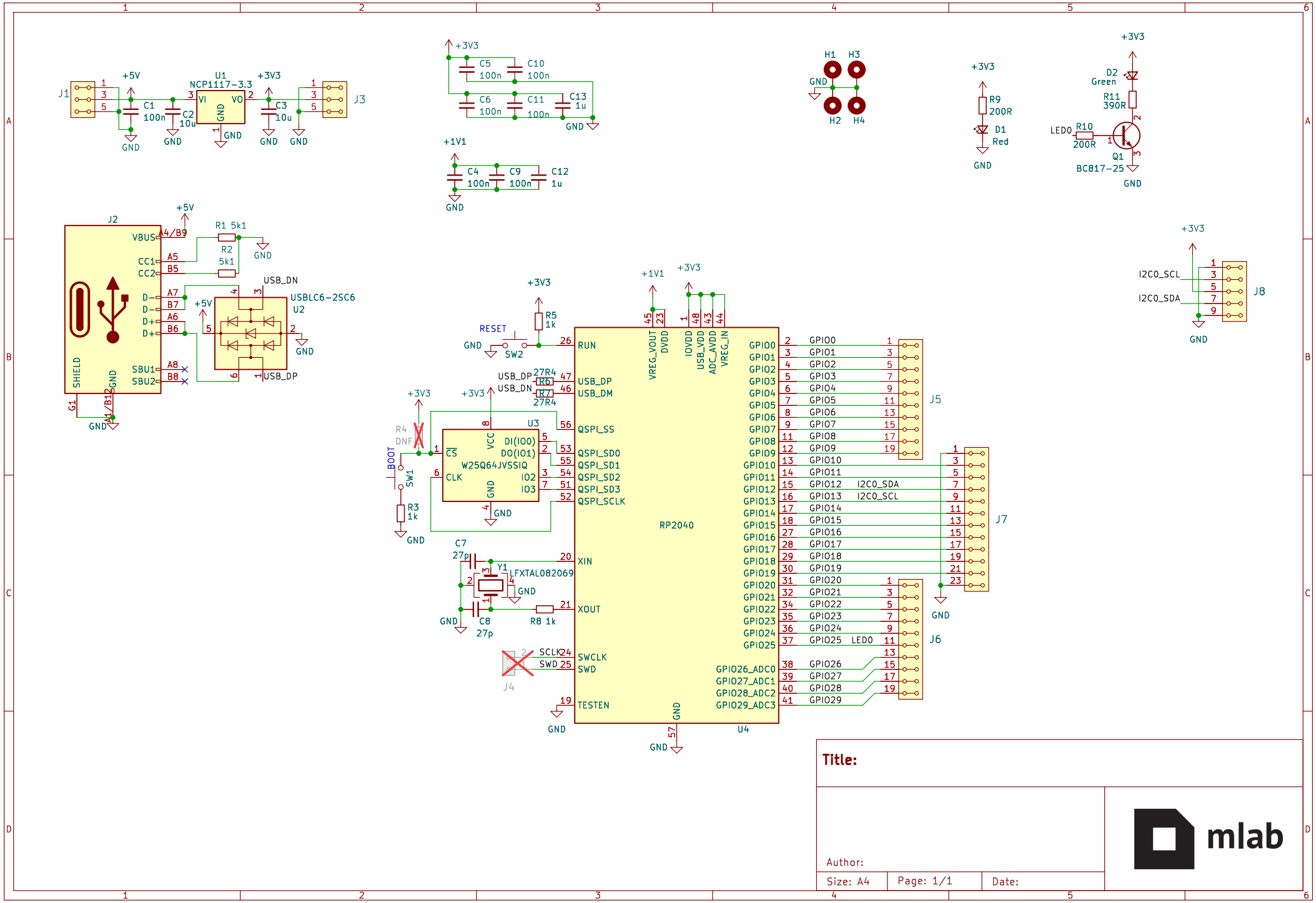
J1
+5V
C1 100n
C2 10u
GND
U1
NCP1117-3.3
VI
VO
GND
+3V3
C3 10u
J3
C5 100n
C10 100n
C6 100n
C11 100n
C13 1u
+1V1
C4 100n
C9 100n
C12 1u
H1
H3
H2
H4
R9 200R
D1 Red
D2 Green
R11 390R
LED0
R10 200R
Q1 BC817-25
J2
VBUS
CC1
CC2
D-
D+
SHIELD
SBU1
SBU2
R1 5k1
R2 5k1
USB_DN
USB_DP
USBLC6-2SC6
U2
RESET
SW2
R5 1k
R4 DNF
BOOT
SW1
R3 1k
U3
W25Q64JVSSIQ
CS
CLK
DI(IO0)
DO(IO1)
IO2
IO3
VCC
C7 27p
C8 27p
Y1
LFXTAL082069
R8 1k
J4
SCLK
SWD
RP2040
RUN
QSPI_SS
QSPI_SD0
QSPI_SD1
QSPI_SD2
QSPI_SD3
QSPI_SCLK
XIN
XOUT
SWCLK
TESTEN
VREG_VOUT
DVDD
IOVDD
USB_VDD
ADC_AVDD
VREG_IN
GPIO26_ADC0
GPIO27_ADC1
GPIO28_ADC2
GPIO29_ADC3
U4
J5
J6
J7
I2C0_SDA
I2C0_SCL
J8
Title:
Author:
Size: A4
Page: 1/1
Date:
mlab