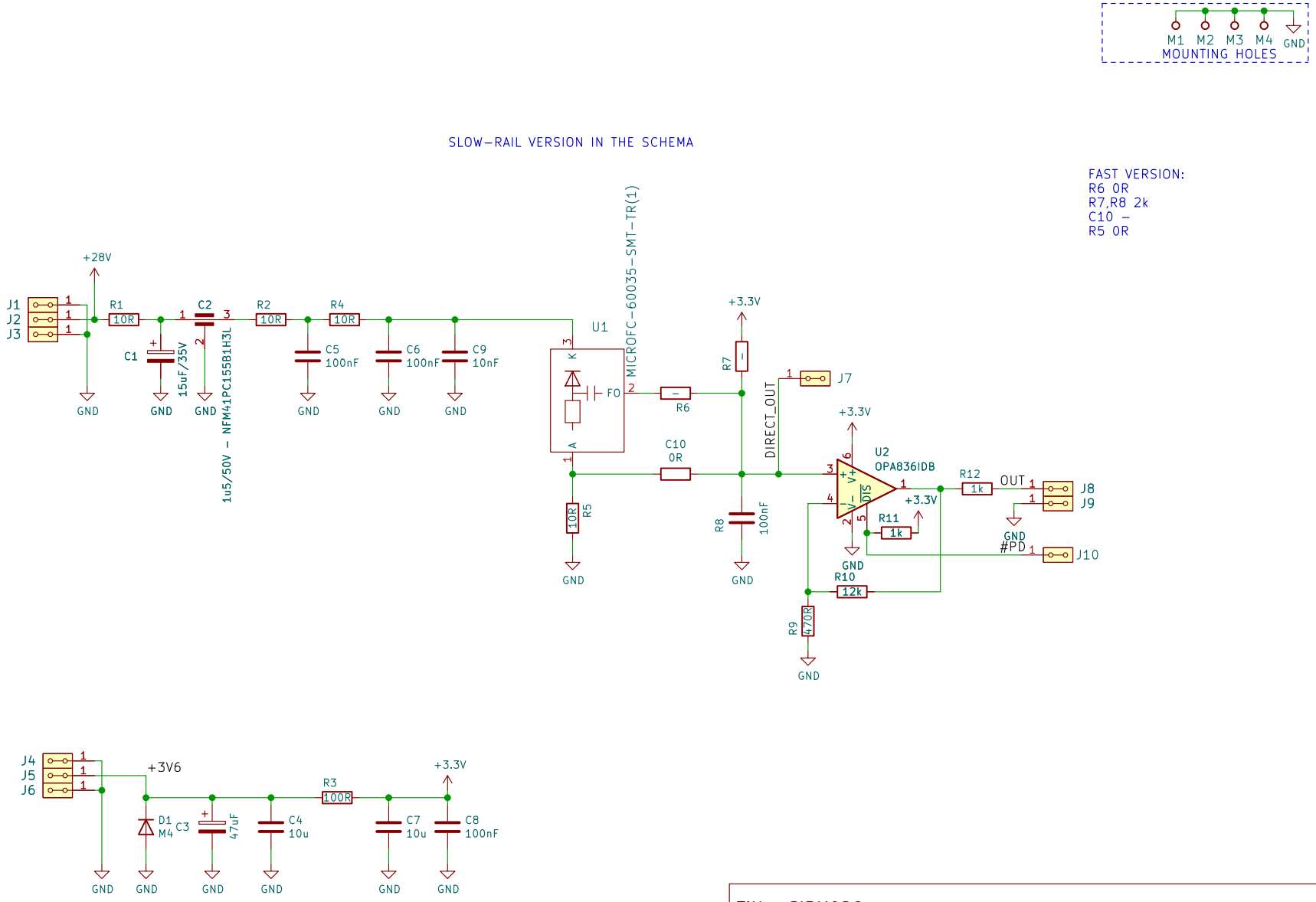

Title: SIPM02C

Silicon photomultiplier interface module

Author: Mlab www.mlab.cz

Size: A4	Page: 1/1	Date: 2022-04-02

mlab