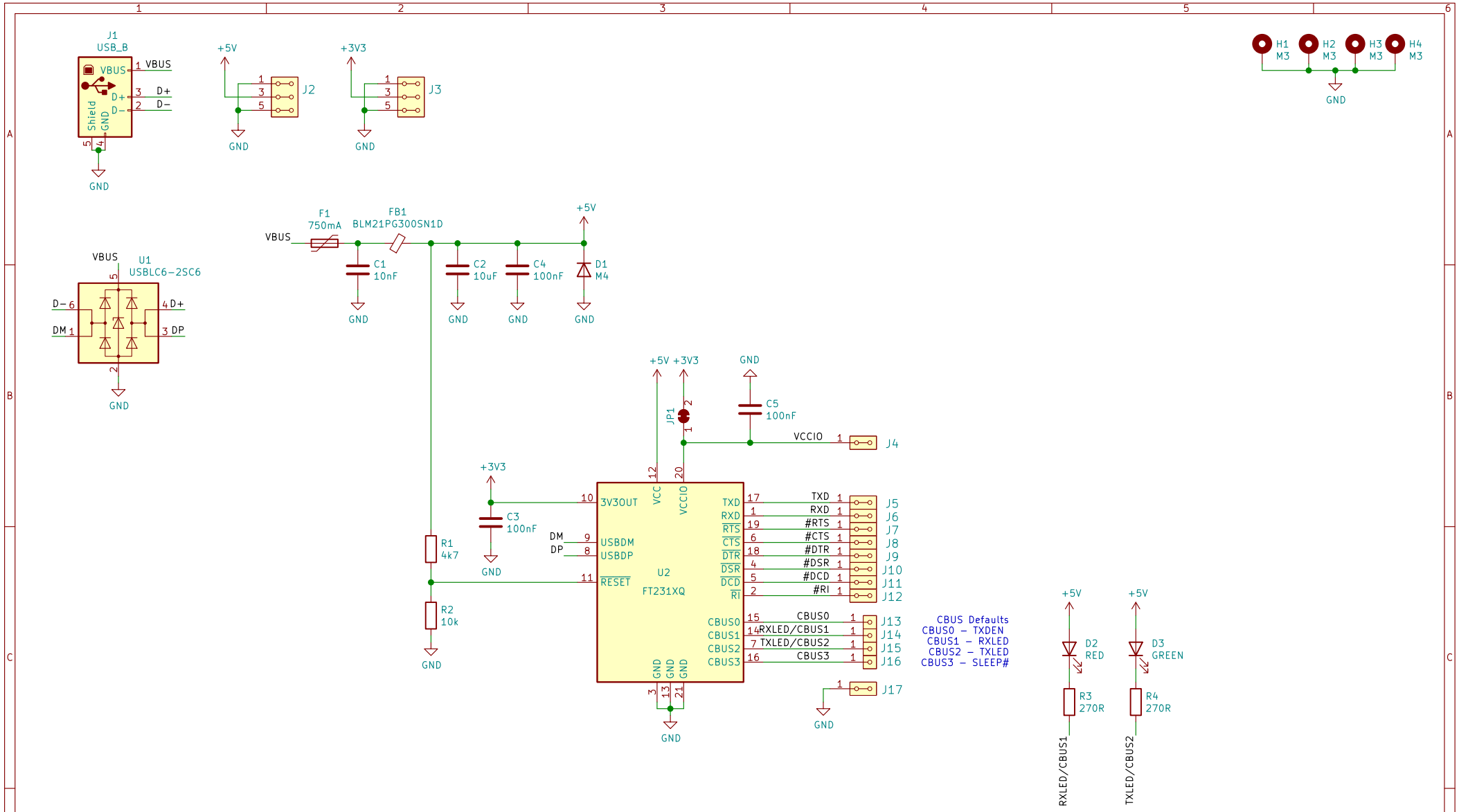


jacho

**Title: USB232R02A**

Author: jacho

| Size: A4 | Page: 1/1 | Date: 2021-03-25 |
|---|---|---|

mlab