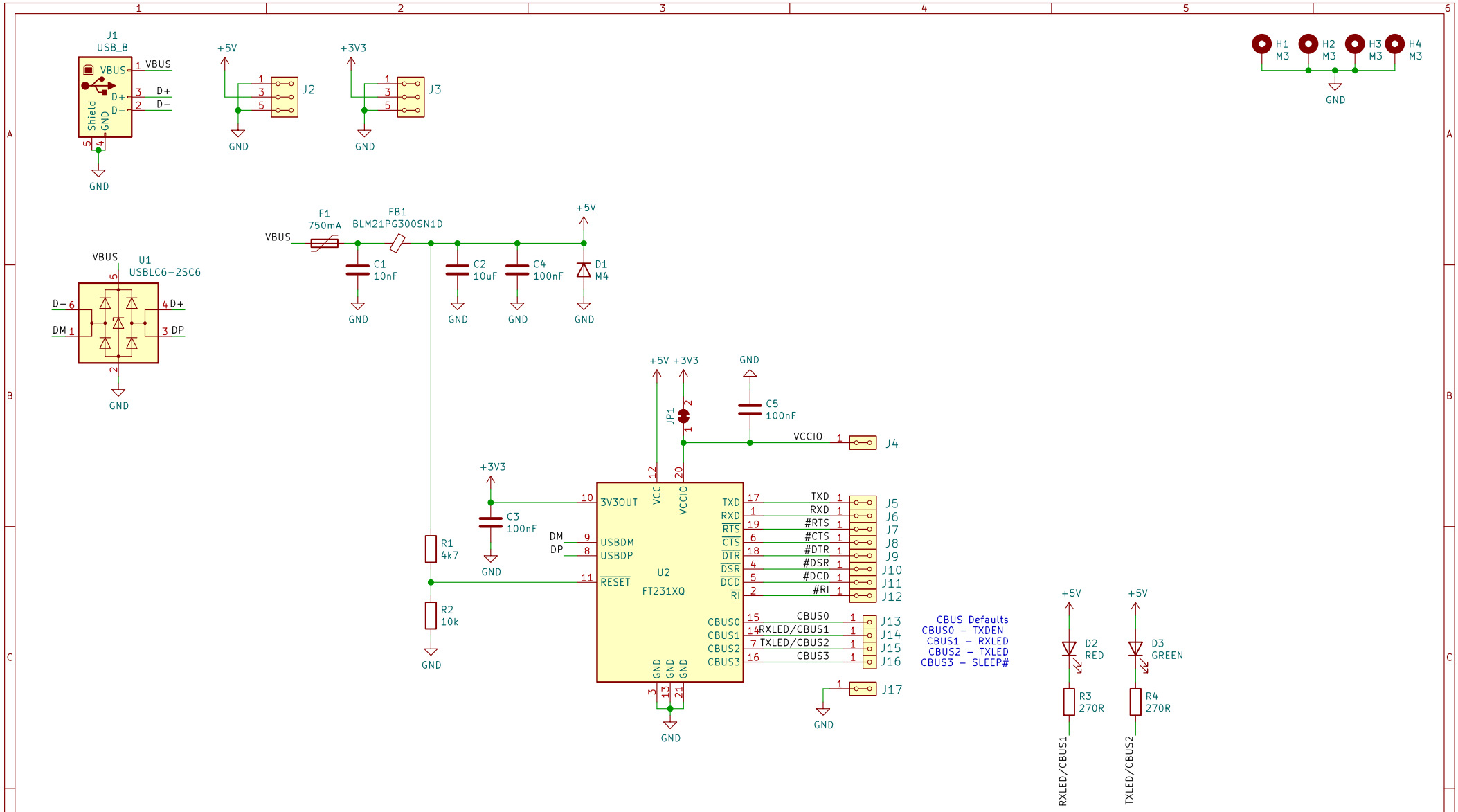

Sheet: /
File: USB232R02A.kicad_sch

Title:

Size: A4	Date:	Rev:
KiCad E.D.A. eeschema 5.99.0−unknown−9ed6cdd94104ubuntu20.10.1		Id: 1/1