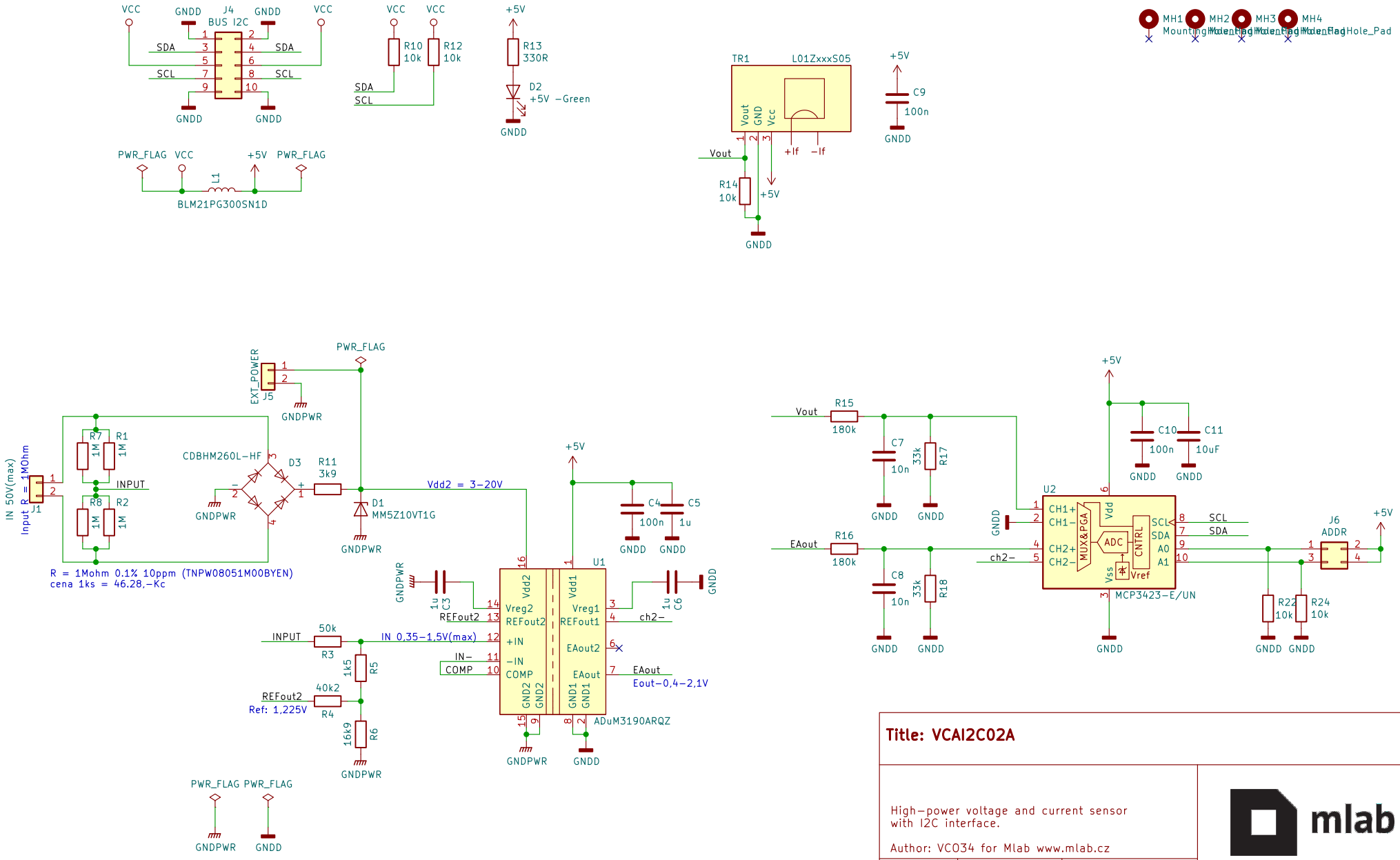

Title: VCAI2C02A

High–power voltage and current sensor
with I2C interface.

Author: VC034 for Mlab www.mlab.cz

Size: A4	Page: 1/1	Date: %F

mlab