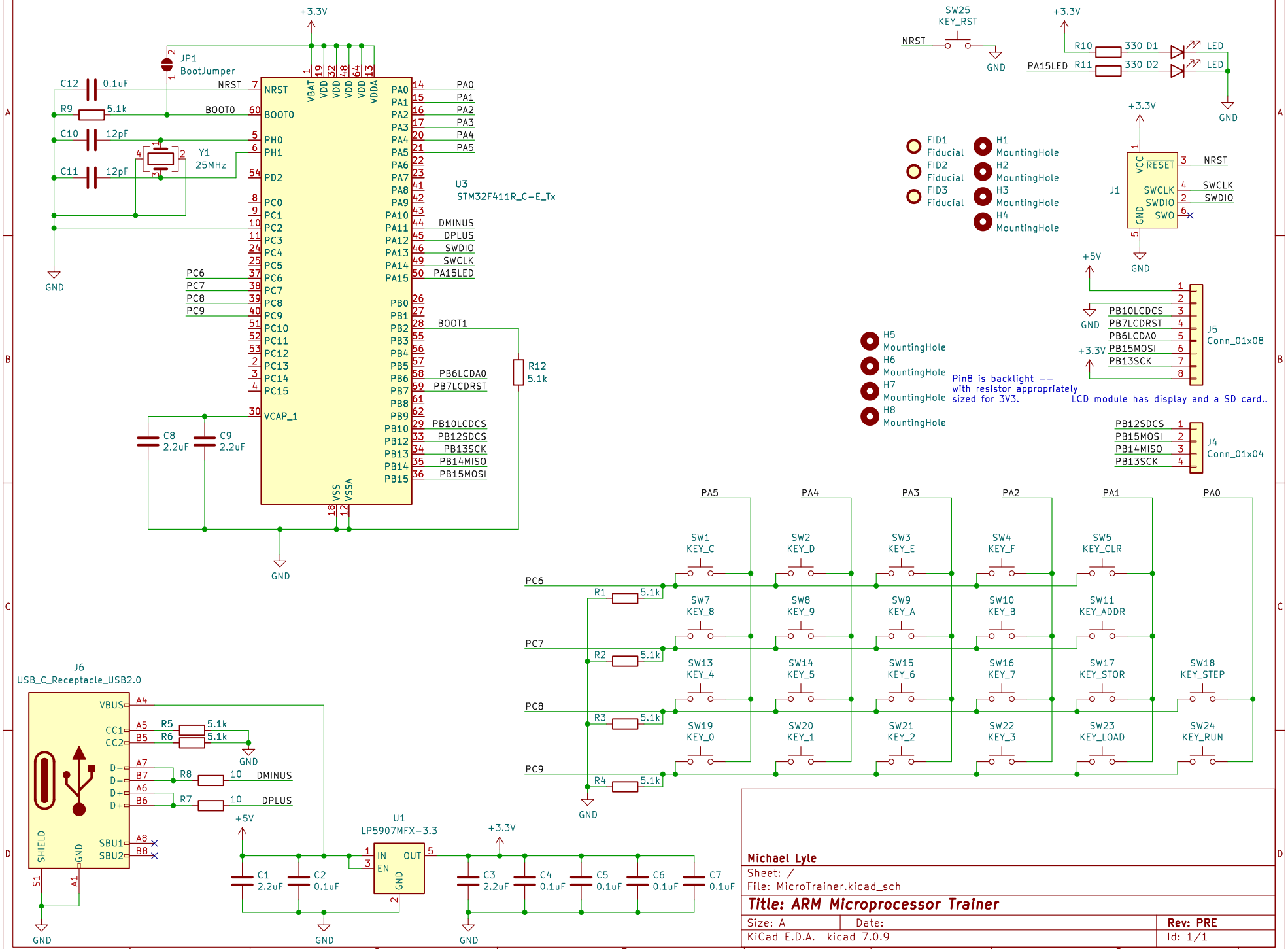
+3.3V
JP1
BootJumper
C12 0.1uF
R9 5.1k
C10 12pF
C11 12pF
Y1
25MHz
NRST
BOOT0
GND
U3
STM32F411R_C-E_Tx
VBAT VDD VDD VDD VDD VDD VDDA
PH0
PH1
PD2
PC0 PC1 PC2 PC3 PC4 PC5 PC6 PC7 PC8 PC9 PC10 PC11 PC12 PC13 PC14 PC15
VCAP_1
VSS VSSA
PA0 PA1 PA2 PA3 PA4 PA5 PA6 PA7 PA8 PA9 PA10 PA11 PA12 PA13 PA14 PA15
PB0 PB1 PB2 PB3 PB4 PB5 PB6 PB7 PB8 PB9 PB10 PB12 PB13 PB14 PB15
DMINUS
DPLUS
SWDIO
SWCLK
PA15LED
BOOT1
PB6LCDA0
PB7LCDRST
PB10LCDCS
PB12SDCS
PB13SCK
PB14MISO
PB15MOSI
R12 5.1k
C8 2.2uF
C9 2.2uF
SW25
KEY_RST
R10 330 D1 LED
R11 330 D2 LED
FID1 Fiducial
FID2 Fiducial
FID3 Fiducial
H1 MountingHole
H2 MountingHole
H3 MountingHole
H4 MountingHole
J1
VCC RESET SWCLK SWDIO SWO GND
+5V
J5
Conn_01x08
PB10LCDCS
PB7LCDRST
PB6LCDA0
PB15MOSI
PB13SCK
H5 MountingHole
H6 MountingHole
H7 MountingHole
H8 MountingHole
Pin8 is backlight -- with resistor appropriately sized for 3V3.
LCD module has display and a SD card..
J4
Conn_01x04
PB12SDCS
PB15MOSI
PB14MISO
PB13SCK
PA5 PA4 PA3 PA2 PA1 PA0
PC6 PC7 PC8 PC9
R1 R2 R3 R4 5.1k
SW1 KEY_C
SW2 KEY_D
SW3 KEY_E
SW4 KEY_F
SW5 KEY_CLR
SW7 KEY_8
SW8 KEY_9
SW9 KEY_A
SW10 KEY_B
SW11 KEY_ADDR
SW13 KEY_4
SW14 KEY_5
SW15 KEY_6
SW16 KEY_7
SW17 KEY_STOR
SW18 KEY_STEP
SW19 KEY_0
SW20 KEY_1
SW21 KEY_2
SW22 KEY_3
SW23 KEY_LOAD
SW24 KEY_RUN
J6
USB_C_Receptacle_USB2.0
VBUS A4
CC1 A5 R5 5.1k
CC2 B5 R6 5.1k
D- A7 B7 R8 10 DMINUS
D+ A6 B6 R7 10 DPLUS
SBU1 A8
SBU2 B8
SHIELD S1
GND A1
+5V
U1
LP5907MFX-3.3
IN OUT EN GND
C1 2.2uF
C2 0.1uF
C3 2.2uF
C4 0.1uF
C5 0.1uF
C6 0.1uF
C7 0.1uF
Michael Lyle
Sheet: /
File: MicroTrainer.kicad_sch
Title: ARM Microprocessor Trainer
Size: A
Date:
Rev: PRE
KiCad E.D.A. kicad 7.0.9
Id: 1/1