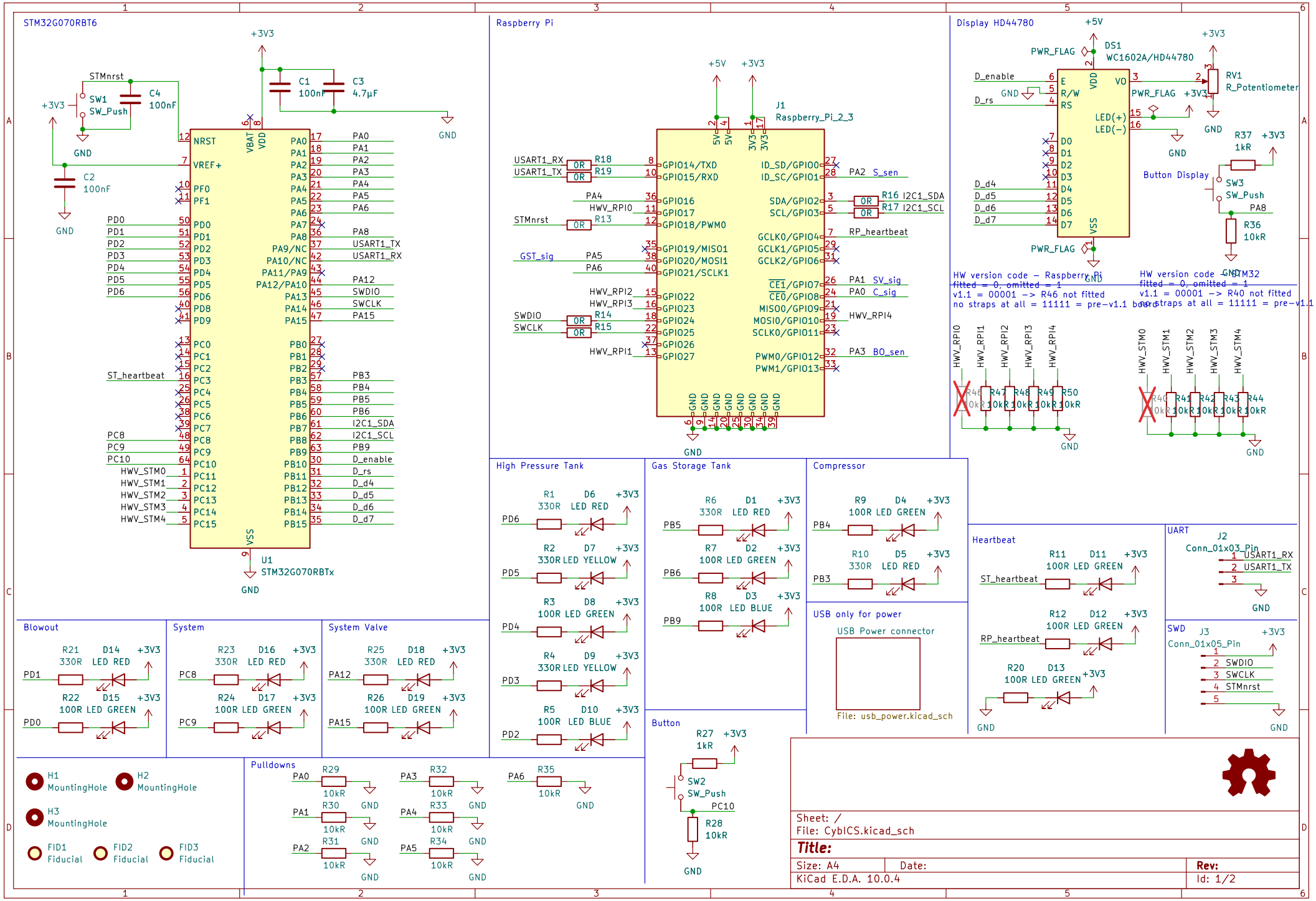
STM32G070RBT6
U1
STM32G070RBTx
Raspberry Pi
J1
Raspberry_Pi_2_3
Display HD44780
DS1
WC1602A/HD44780
RV1
R_Potentiometer
Button Display
SW3
SW_Push
HW version code – Raspberry Pi
fitted = 0, omitted = 1
v1.1 = 00001 –> R46 not fitted
no straps at all = 11111 = pre–v1.1 board
HW version code – STM32
fitted = 0, omitted = 1
v1.1 = 00001 –> R40 not fitted
no straps at all = 11111 = pre–v1.1 board
High Pressure Tank
Gas Storage Tank
Compressor
Heartbeat
UART
J2
Conn_01x03_Pin
USB only for power
USB Power connector
File: usb_power.kicad_sch
SWD
J3
Conn_01x05_Pin
Blowout
System
System Valve
Button
SW2
SW_Push
Pulldowns
H1 MountingHole
H2 MountingHole
H3 MountingHole
FID1 Fiducial
FID2 Fiducial
FID3 Fiducial
Sheet: /
File: CybICS.kicad_sch
Title:
Size: A4
Date:
Rev:
KiCad E.D.A. 10.0.4
Id: 1/2

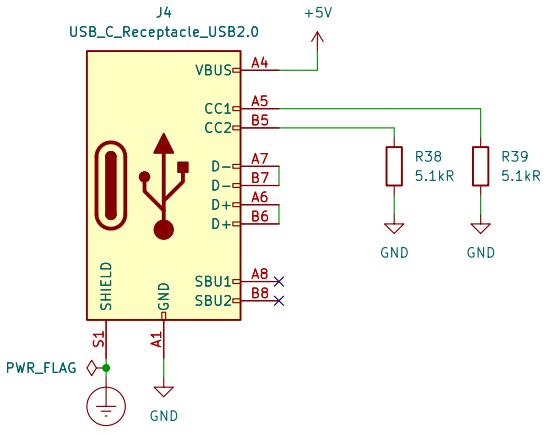

Sheet: /USB Power connector/
File: usb_power.kicad_sch

Title:

Size: A4	Date:	Rev:
KiCad E.D.A. 10.0.4		Id: 2/2