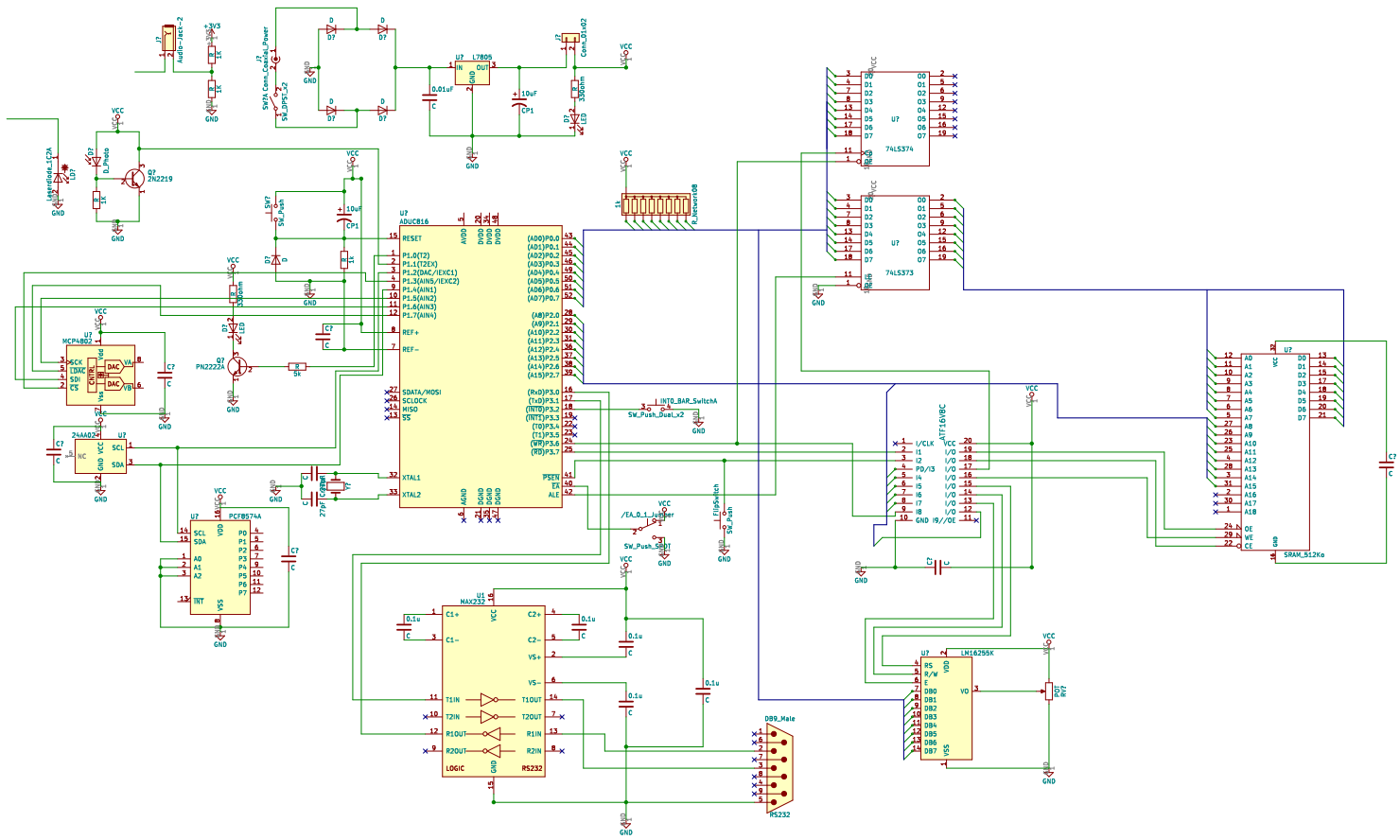

Monish Nene – CU Boulder

Sheet: /

File: Project_Schematic.sch

Title: Schematic ESD Spring 2018

Size: A2	Date: 2018-04-30	Rev: Final Project
KiCad E.D.A. kicad 4.0.7		Id: 1/1