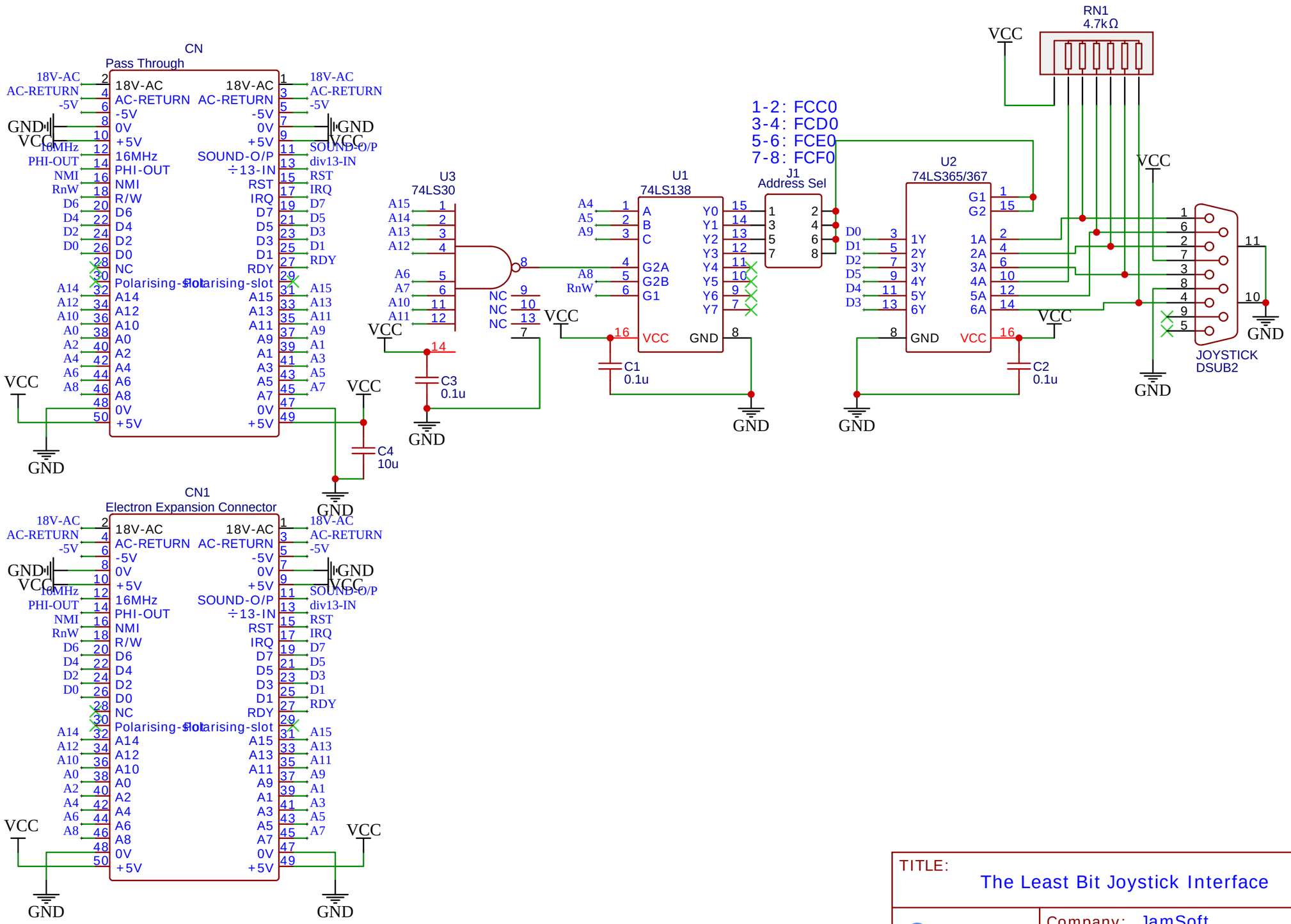

TITLE: The Least Bit Joystick Interface

REV: 1.0

Company: JamSoft

Sheet: 1/1

Date: 2024-02-03

Drawn By: Chris Jamieson