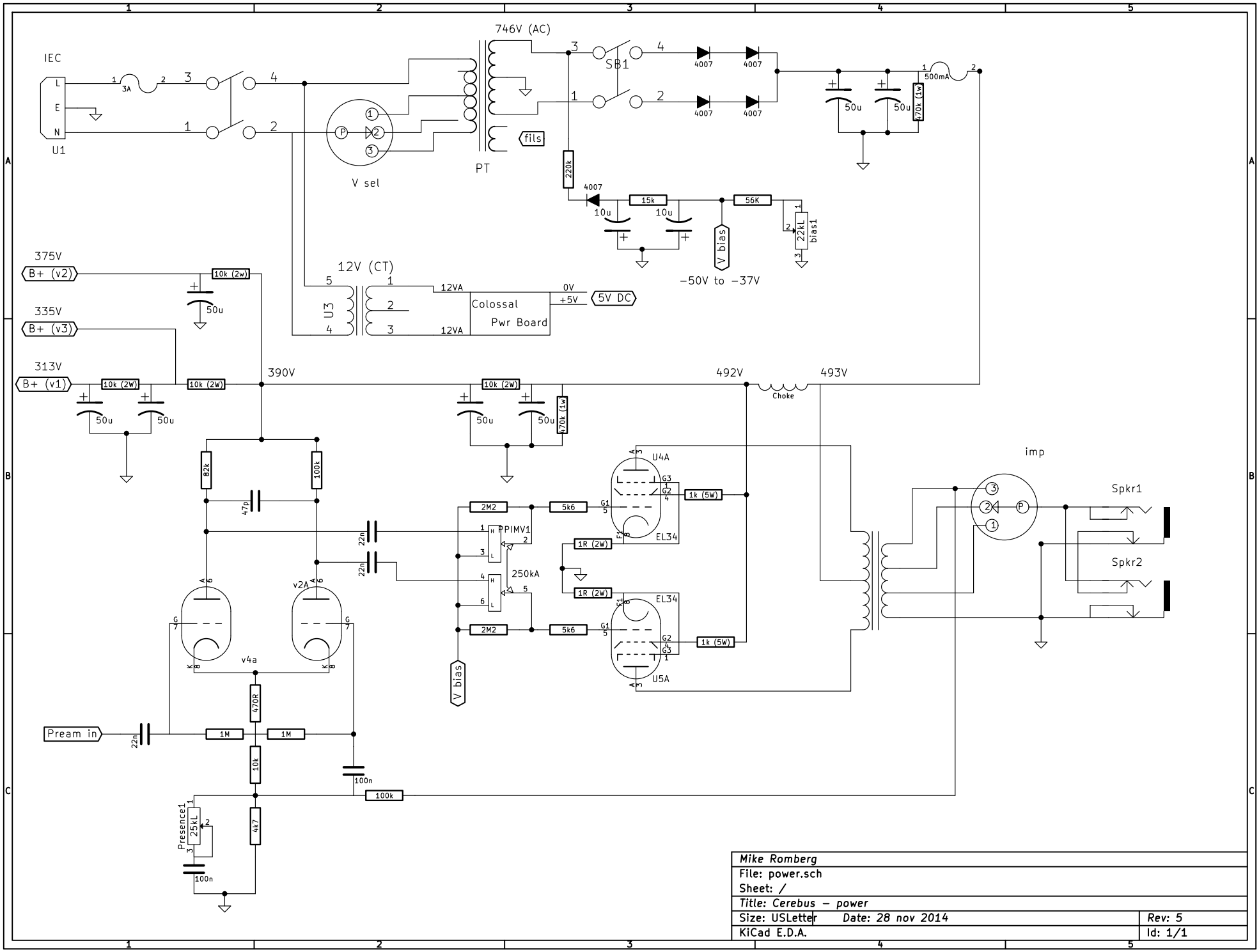

Mike Romberg	
File: power.sch	
Sheet: /	
Title: Cerebus – power	
Size: USLetter Date: 28 nov 2014	Rev: 5
KiCad E.D.A.	Id: 1/1