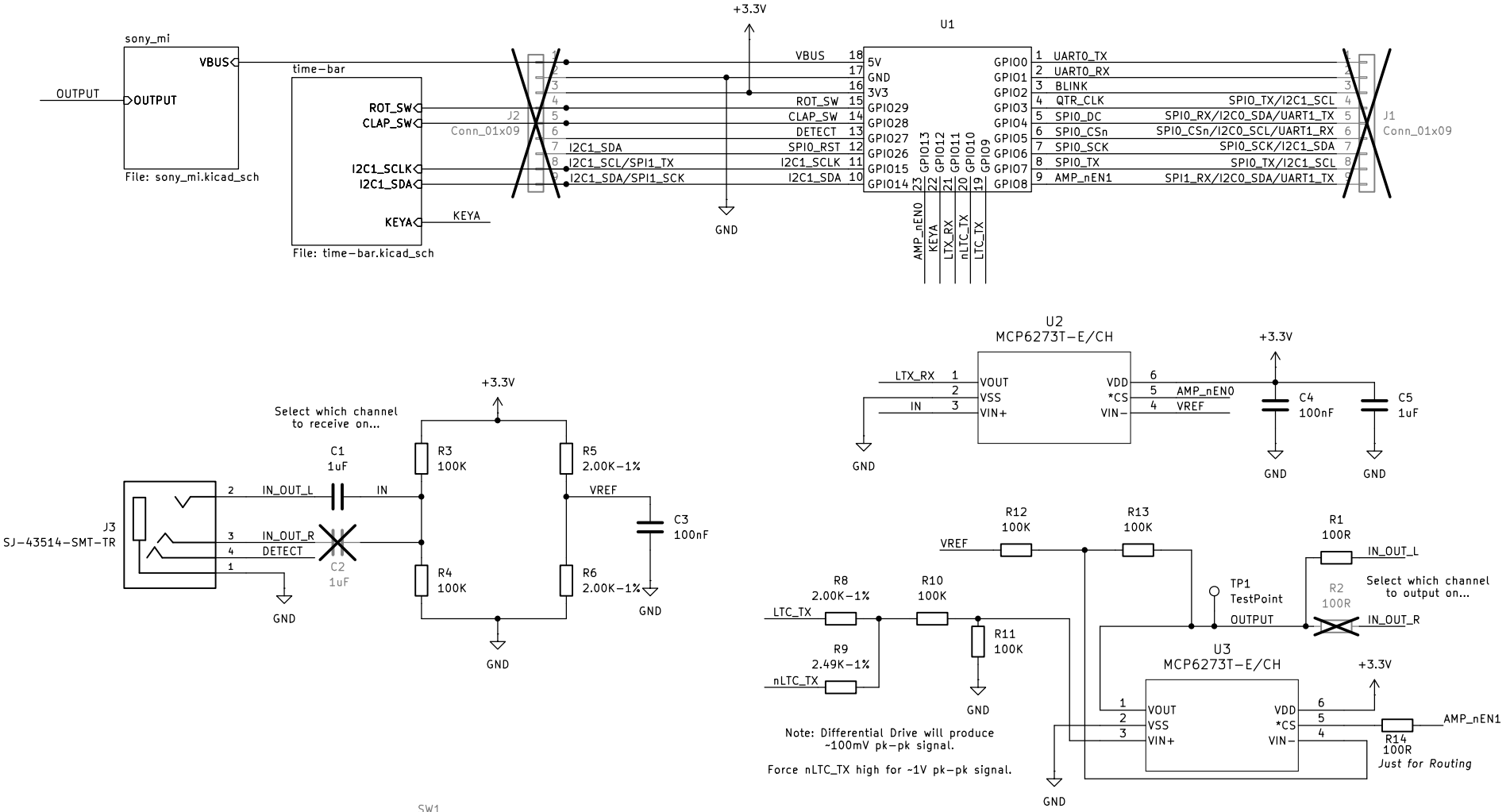

PT Thrifty – lowest cost TimeCode

Sheet: /
File: pt_thrifty.kicad_sch

Title: LTC Interface for WaveShare RP2040-Zero

Size: A4	Date: 2026-07-28 © Simon Wood	**Rev:** Rev 3
KiCad E.D.A. 10.0.5		Id: 1/3

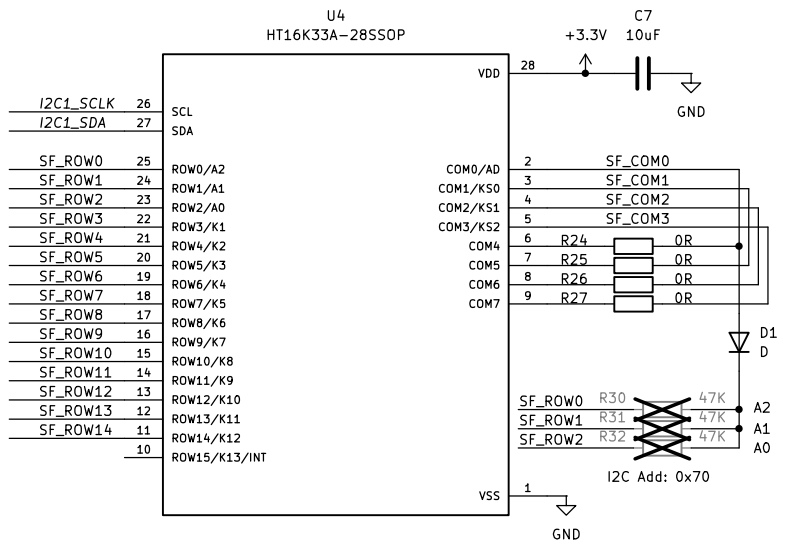

This schematic is designed for the Adafruit "1907" LED modules (and variant colours).
https://cdn-shop.adafruit.com/datasheets/CID2379.pdf

It can easily be adapted for other modules, but for optimum performance try to use modules with a 'common cathode' serving all segments of each digit. This allows use of the 'doubling hack' to reduce flicker (ie R24..R27).

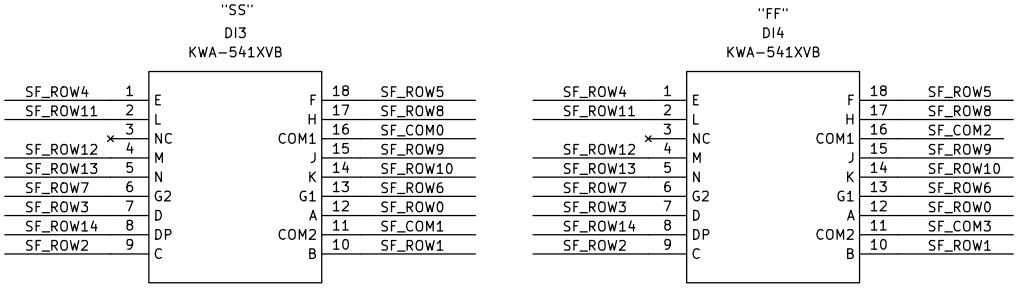

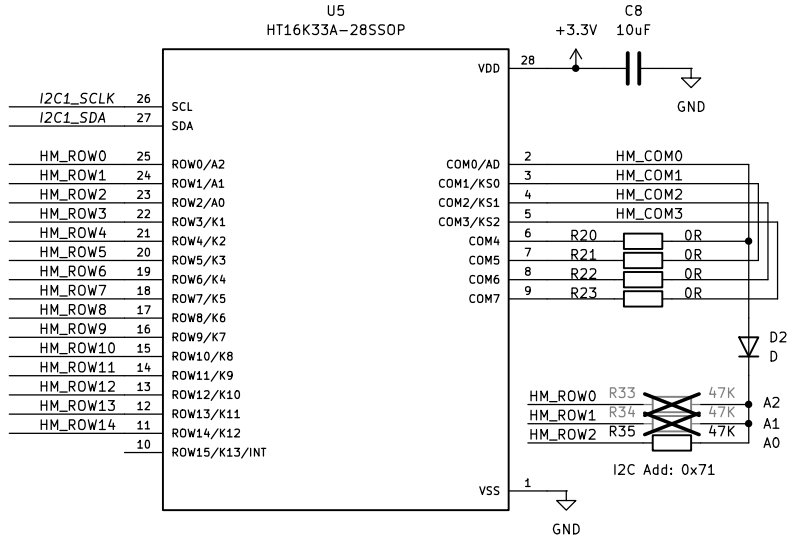

Note: 'HH:MM' display is mounted up-side-down,
Firmware with rotate the characters as they are displayed

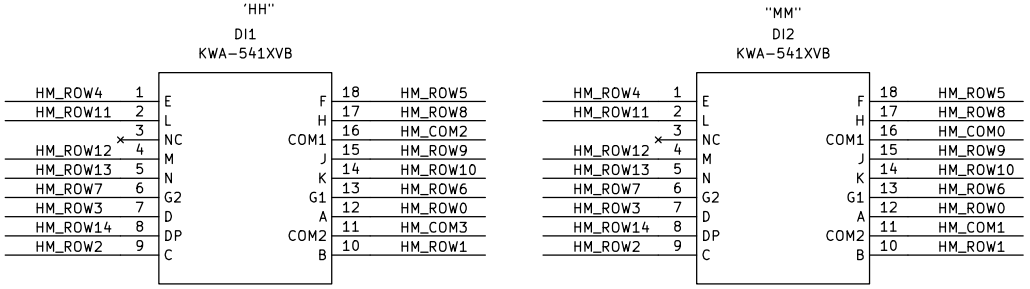

PCB Dimensions: 6.5inch x 1.2 inch.
LED 'Break-off' section is 5.2 inch wide,
mounting holes M4 either side of LEDs (spaced 4.4 inch).

H1 MountingHole

H2 MountingHole

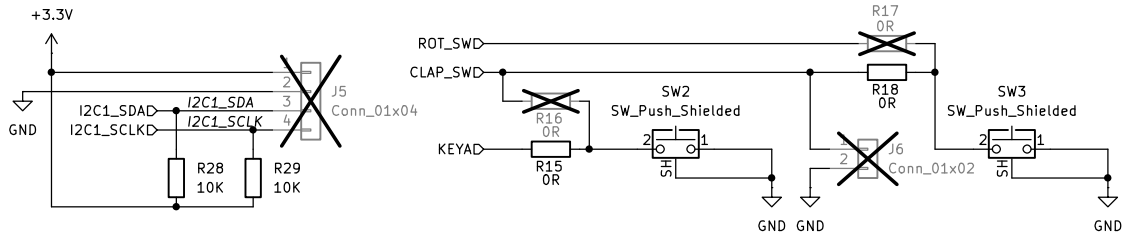

PT Thrifty – lowest cost TimeCode

Sheet: /time-bar/
File: time-bar.kicad_sch

Title: 16-Segment "Time-Bar" – for KWA-541XVB modules

Size: A4	Date: 2026-07-28 © Simon Wood	**Rev:** Rev 3
KiCad E.D.A. 10.0.5		Id: 2/3

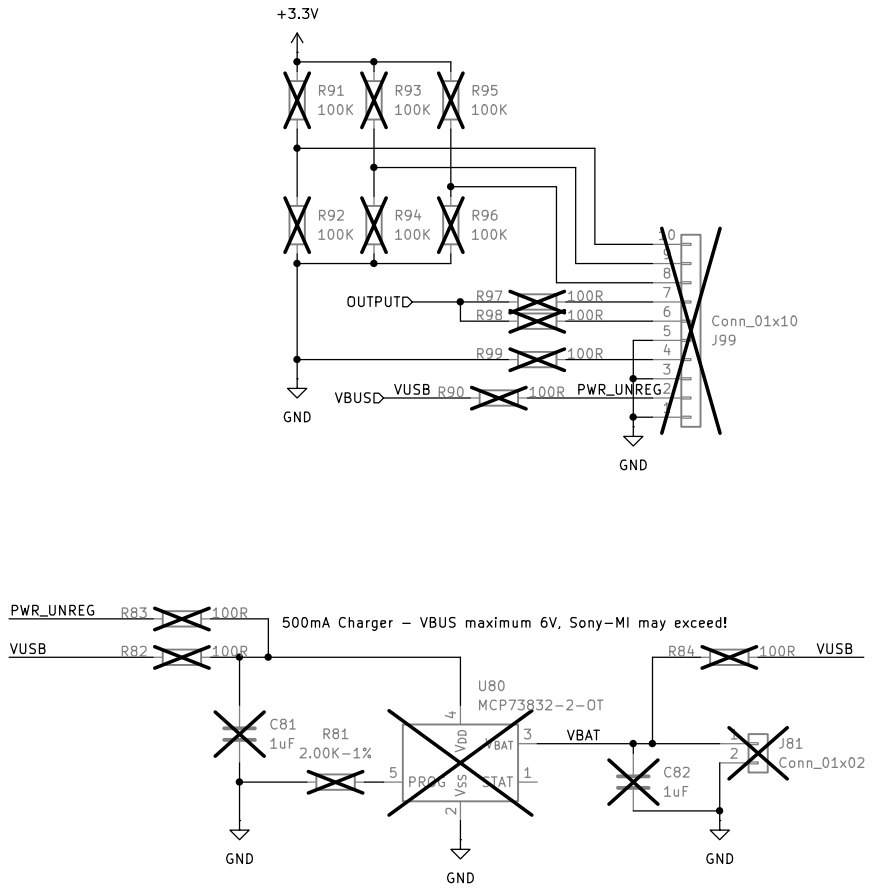

PT Thrifty – lowest cost TimeCode

Sheet: /sony_mi/
File: sony_mi.kicad_sch

Title: Expiremental Sony-MI inteface – using flex/connector from SMAD-P3

Size: A4	Date: 2026-07-28 © Simon Wood	**Rev:** Rev 3
KiCad E.D.A. 10.0.5		Id: 3/3