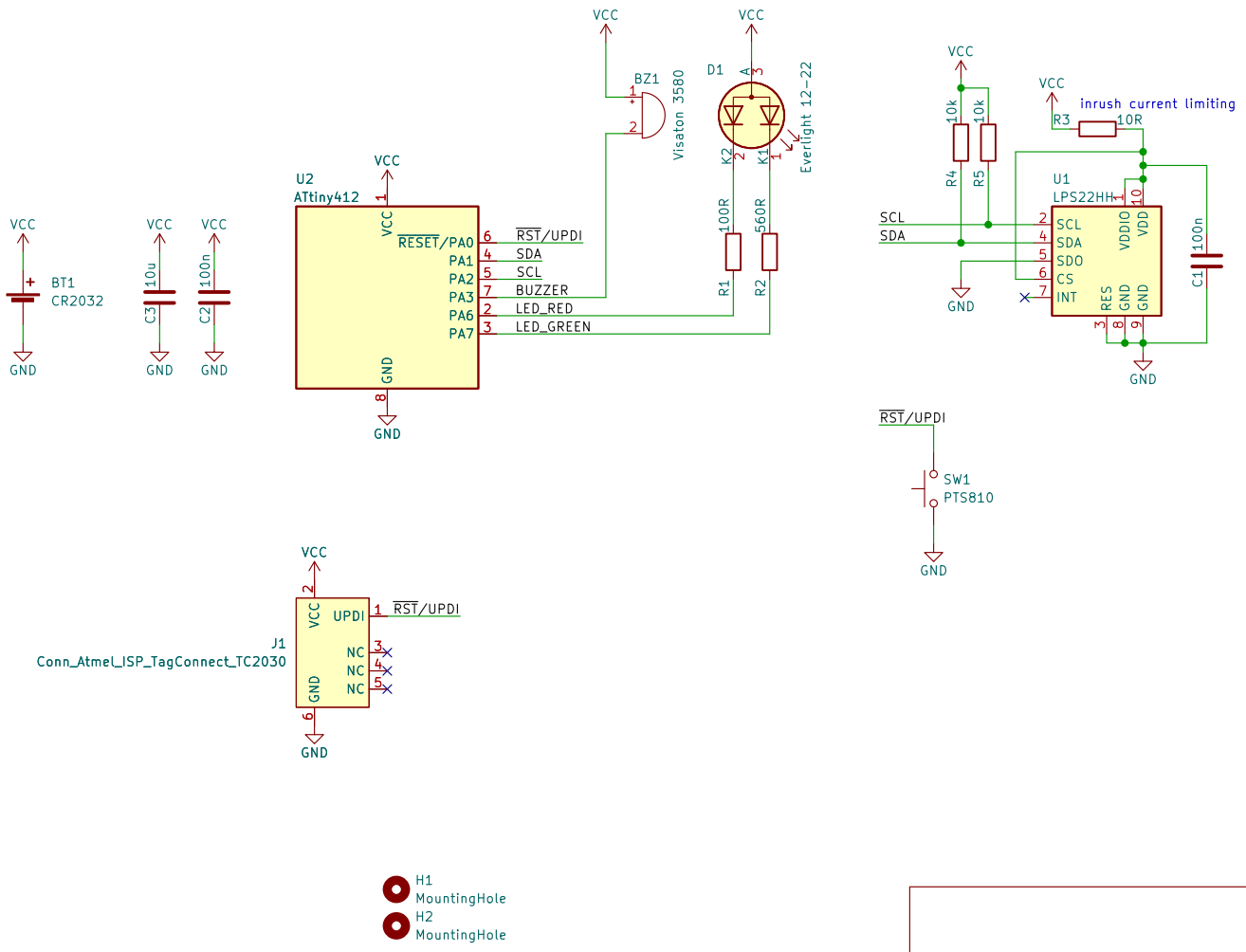

Sheet: /
File: leak-detector.kicad_sch

Title:

Size: A4	Date:	Rev:
KiCad E.D.A. kicad 6.0.11+dfsg-1~bpo11+1		Id: 1/1