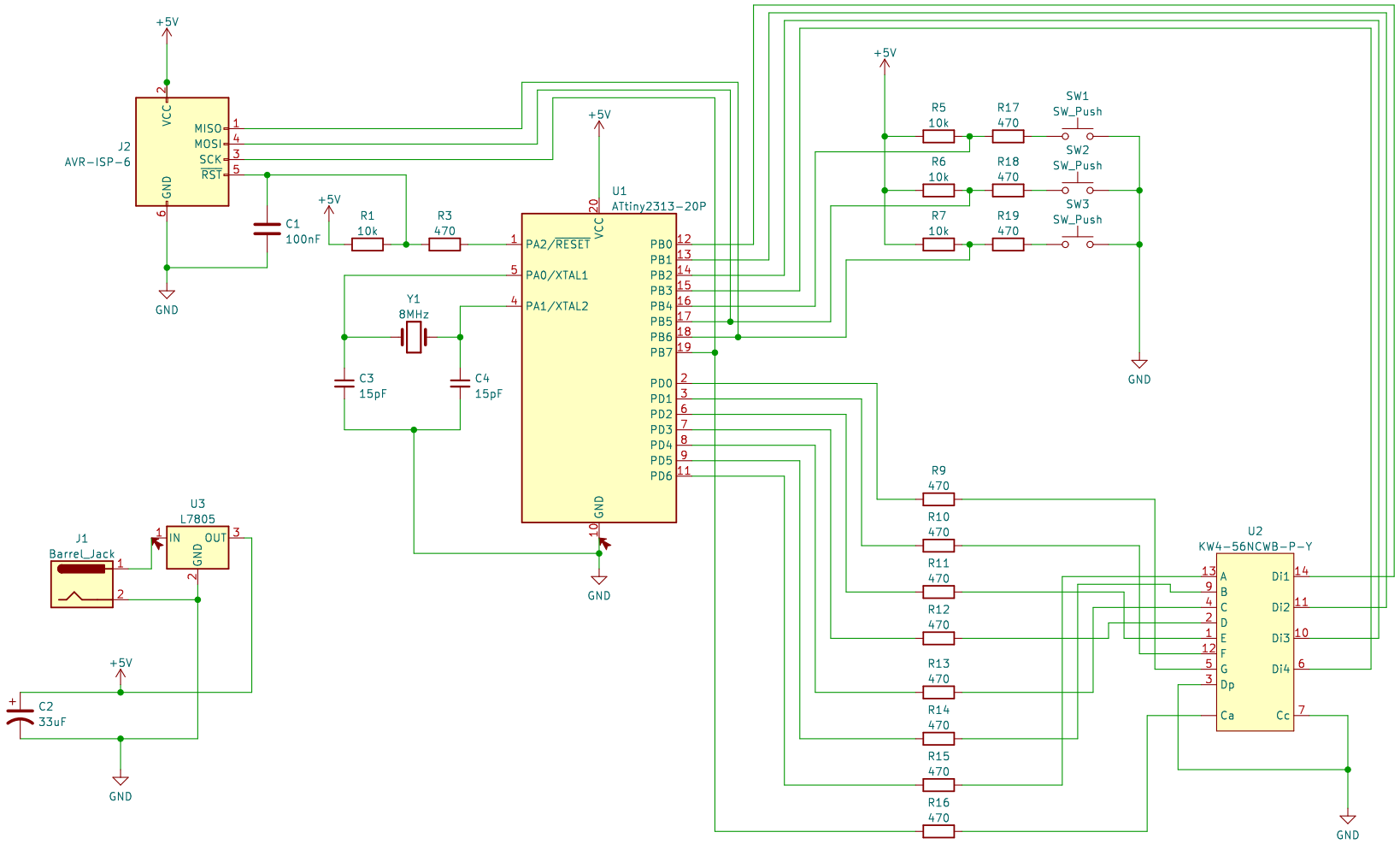

Designer: Matthew Whited

Out-of-Band Development

Sheet: /

File: SimpleClockExt.kicad_sch

Title: Simple Clock – ATTiny2313

Size: A4	Date:	**Rev: 2**
KiCad E.D.A. kicad (6.0.10)		Id: 1/1