Follow Electronics Assembly Instructions

Project directory on Thingiverse: https://www.thingiverse.com/thing:4743929

Leave power supply in casing and only cut/strip 12VDC side
(following assembly instructions)

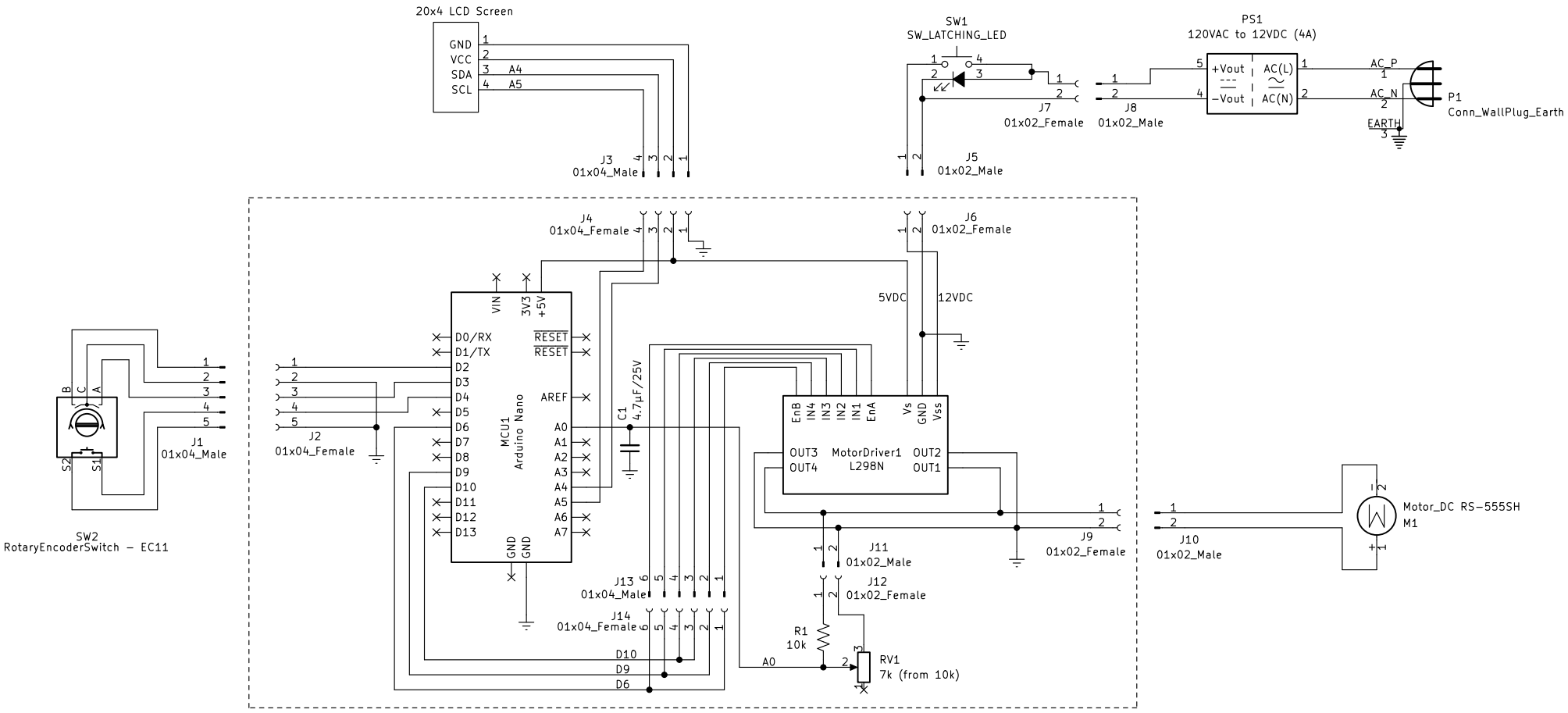

Adam B Johnson		
Sheet: /		
File: Control Schematic – V2.kicad_sch		
Title: Control Schematic – V2.5		
Size: A4	Date: 2022-11-23	**Rev: B.1**
KiCad E.D.A. kicad (6.0.4)		Id: 1/1