FCH ground

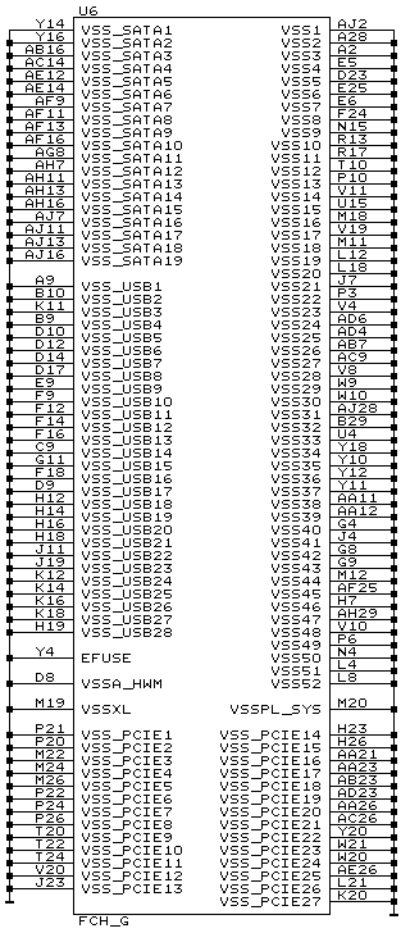

!LINK
!2.SCH
!3.SCH
!4.SCH
!5.SCH
!6.SCH
!7.SCH
!8.SCH
!9.SCH
!10.SCH
!11.SCH
!12.SCH
!13.SCH
!14.SCH
!15.SCH
!16.SCH
!17.SCH
!18.SCH

(C)2011 PC Engines GmbH

Size	Document Number	REV
B	apu	1C
Date: May 4, 2012	Sheet 1 of 18	

APU DRAM interface

DRAM bypass

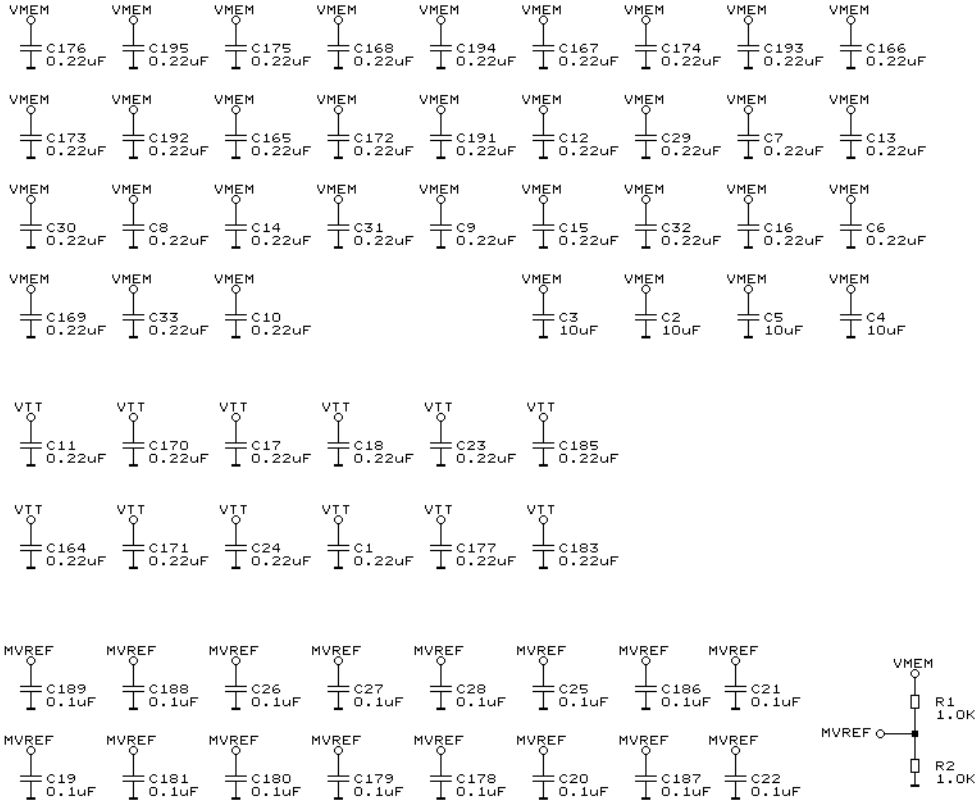

(C)2011 PC Engines GmbH

Title	DRAM interface / power	
Size: B	Document Number: apu	REV: 1C
Date: June 11, 2013	Sheet 2 of 18	

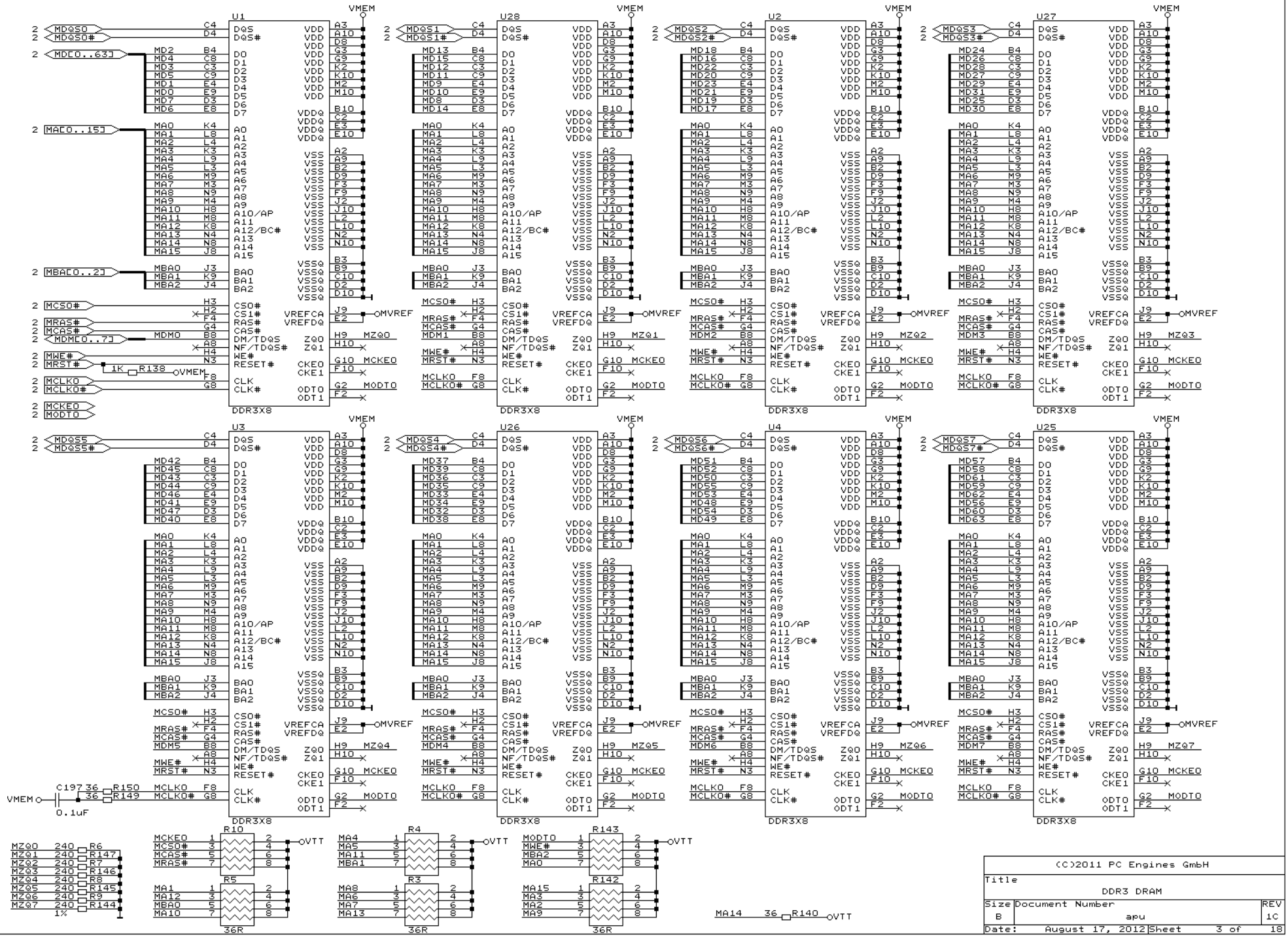
U1
U28
U2
U27
U3
U26
U4
U25
DDR3X8
VMEM
MDQS0
MDQS0#
MD[0..63]
MA[0..15]
MBA[0..2]
MCS0#
MRAS#
MCAS#
MDM[0..7]
MWE#
MRST#
MCLK0
MCLK0#
MCKE0
MODT0
MDQS1
MDQS1#
MDQS2
MDQS2#
MDQS3
MDQS3#
MDQS5
MDQS5#
MDQS4
MDQS4#
MDQS6
MDQS6#
MDQS7
MDQS7#
MZQ0
MZQ1
MZQ2
MZQ3
MZQ4
MZQ5
MZQ6
MZQ7
MVREF
VTT
R138
1K
C197
R150
R149
0.1uF
R10
R5
R4
R3
R143
R142
36R
R6
R147
R7
R146
R8
R145
R9
R144
1%
MA14
R140
(C)2011 PC Engines GmbH
Title
DDR3 DRAM
Size
B
Document Number
apu
REV
1C
Date: August 17, 2012
Sheet 3 of 18

APU power

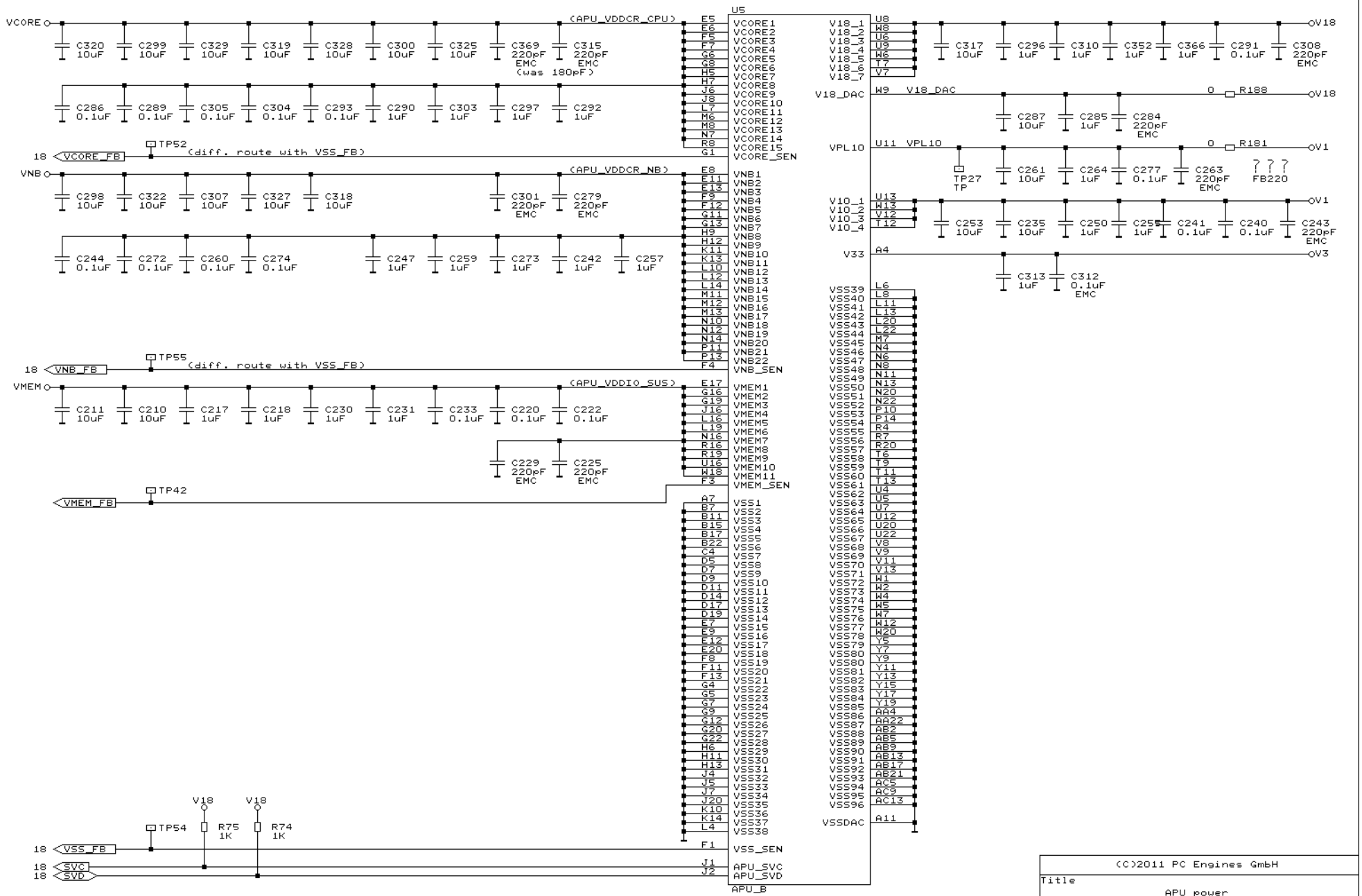

(C)2011 PC Engines GmbH

Title	APU power	
Size B	Document Number apu	REV 1C
Date: May 4, 2012	Sheet 4 of 18	

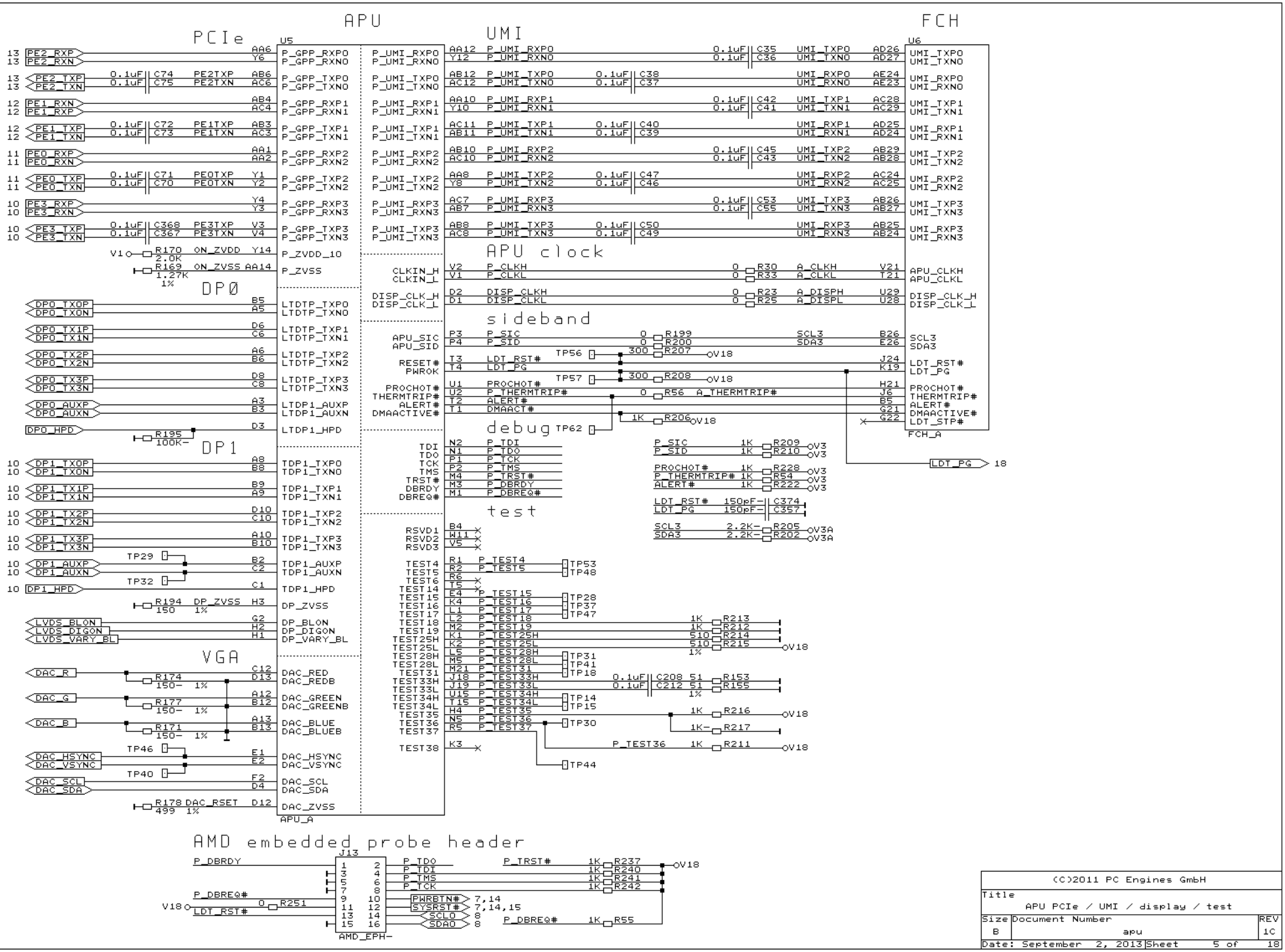
APU
PCIe
UMI
FCH
U5
U6
APU_A
FCH_A
DP0
DP1
VGA
APU clock
sideband
debug
test
AMD embedded probe header
J13
AMD_EPH-
P_GPP_RXP0
P_GPP_RXN0
P_GPP_TXP0
P_GPP_TXN0
P_GPP_RXP1
P_GPP_RXN1
P_GPP_TXP1
P_GPP_TXN1
P_GPP_RXP2
P_GPP_RXN2
P_GPP_TXP2
P_GPP_TXN2
P_GPP_RXP3
P_GPP_RXN3
P_GPP_TXP3
P_GPP_TXN3
P_ZVDD_10
P_ZVSS
LTDTP_TXP0
LTDTP_TXN0
LTDTP_TXP1
LTDTP_TXN1
LTDTP_TXP2
LTDTP_TXN2
LTDTP_TXP3
LTDTP_TXN3
LTDP1_AUXP
LTDP1_AUXN
LTDP1_HPD
TDP1_TXP0
TDP1_TXN0
TDP1_TXP1
TDP1_TXN1
TDP1_TXP2
TDP1_TXN2
TDP1_TXP3
TDP1_TXN3
TDP1_AUXP
TDP1_AUXN
TDP1_HPD
DP_ZVSS
DP_BLON
DP_DIGON
DP_VARY_BL
DAC_RED
DAC_REDB
DAC_GREEN
DAC_GREENB
DAC_BLUE
DAC_BLUEB
DAC_HSYNC
DAC_VSYNC
DAC_SCL
DAC_SDA
DAC_ZVSS
P_UMI_RXP0
P_UMI_RXN0
P_UMI_TXP0
P_UMI_TXN0
P_UMI_RXP1
P_UMI_RXN1
P_UMI_TXP1
P_UMI_TXN1
P_UMI_RXP2
P_UMI_RXN2
P_UMI_TXP2
P_UMI_TXN2
P_UMI_RXP3
P_UMI_RXN3
P_UMI_TXP3
P_UMI_TXN3
UMI_TXP0
UMI_TXN0
UMI_RXP0
UMI_RXN0
UMI_TXP1
UMI_TXN1
UMI_RXP1
UMI_RXN1
UMI_TXP2
UMI_TXN2
UMI_RXP2
UMI_RXN2
UMI_TXP3
UMI_TXN3
UMI_RXP3
UMI_RXN3
CLKIN_H
CLKIN_L
APU_CLKH
APU_CLKL
DISP_CLK_H
DISP_CLK_L
APU_SIC
APU_SID
SCL3
SDA3
RESET#
PWROK
LDT_RST#
LDT_PG
PROCHOT#
THERMTRIP#
ALERT#
DMAACTIVE#
LDT_STP#
TDI
TDO
TCK
TMS
TRST#
DBRDY
DBREQ#
RSVD1
RSVD2
RSVD3
TEST4
TEST5
TEST6
TEST14
TEST15
TEST16
TEST17
TEST18
TEST19
TEST25H
TEST25L
TEST28H
TEST28L
TEST31
TEST33H
TEST33L
TEST34H
TEST34L
TEST35
TEST36
TEST37
TEST38
P_TDI
P_TDO
P_TCK
P_TMS
P_TRST#
P_DBRDY
P_DBREQ#
P_TEST4
P_TEST5
P_TEST6
P_TEST14
P_TEST15
P_TEST16
P_TEST17
P_TEST18
P_TEST19
P_TEST25H
P_TEST25L
P_TEST28H
P_TEST28L
P_TEST31
P_TEST33H
P_TEST33L
P_TEST34H
P_TEST34L
P_TEST35
P_TEST36
P_TEST37
P_TEST44
PWRBTN#
SYSRST#
SCLO
SDAO
7,14
7,14,15
8
8
V18
V3
V3A
18
(C)2011 PC Engines GmbH
Title
APU PCIe / UMI / display / test
Size
B
Document Number
apu
REV
1C
Date: September 2, 2013
Sheet 5 of 18

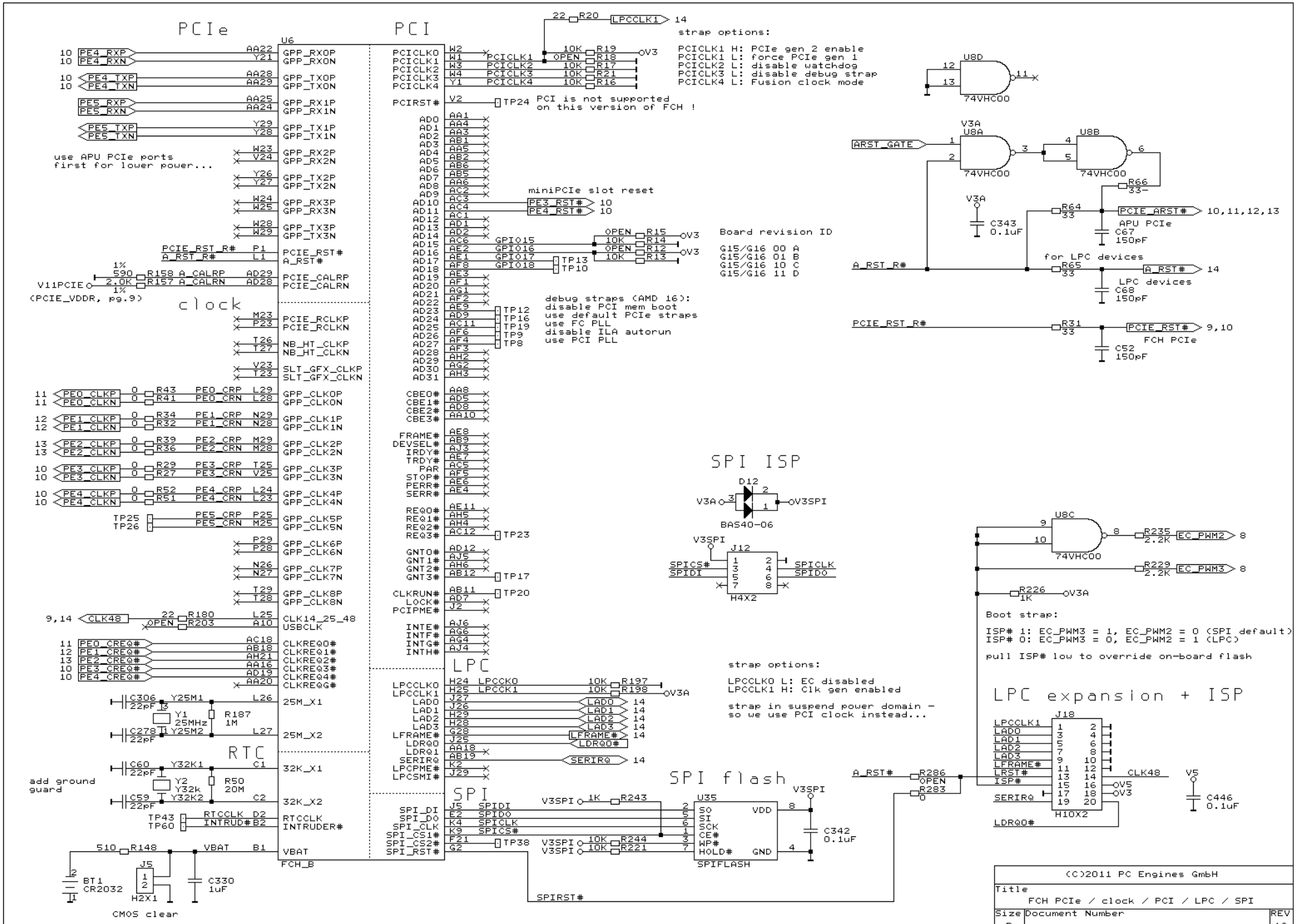

(C)2011 PC Engines GmbH

Title	FCH PCIe / clock / PCI / LPC / SPI	
Size B	Document Number apu	REV 1C
Date: September 2, 2013	Sheet 6 of 18	

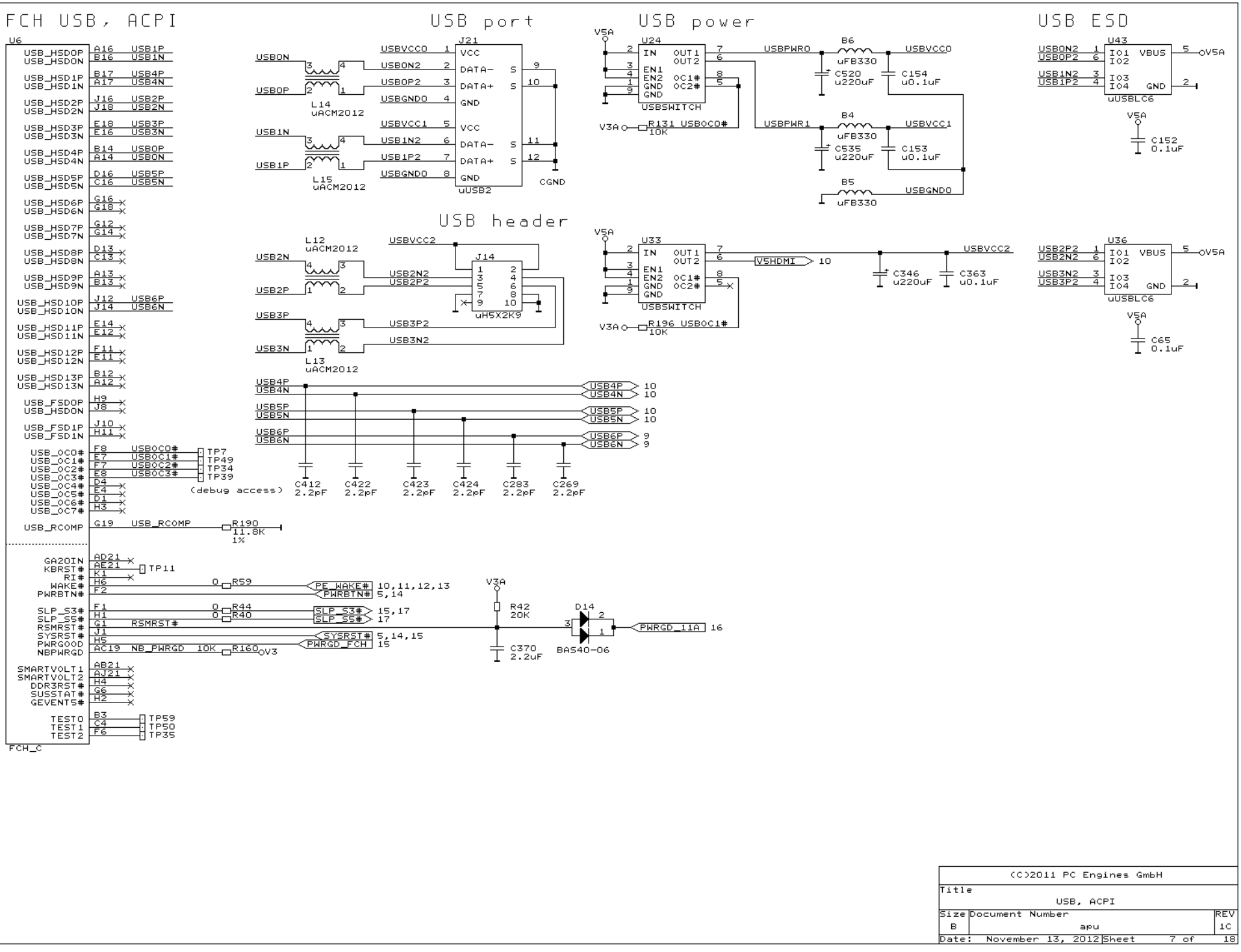

(C)2011 PC Engines GmbH

Title	USB, ACPI	
Size B	Document Number apu	REV 1C
Date: November 13, 2012	Sheet 7 of 18	

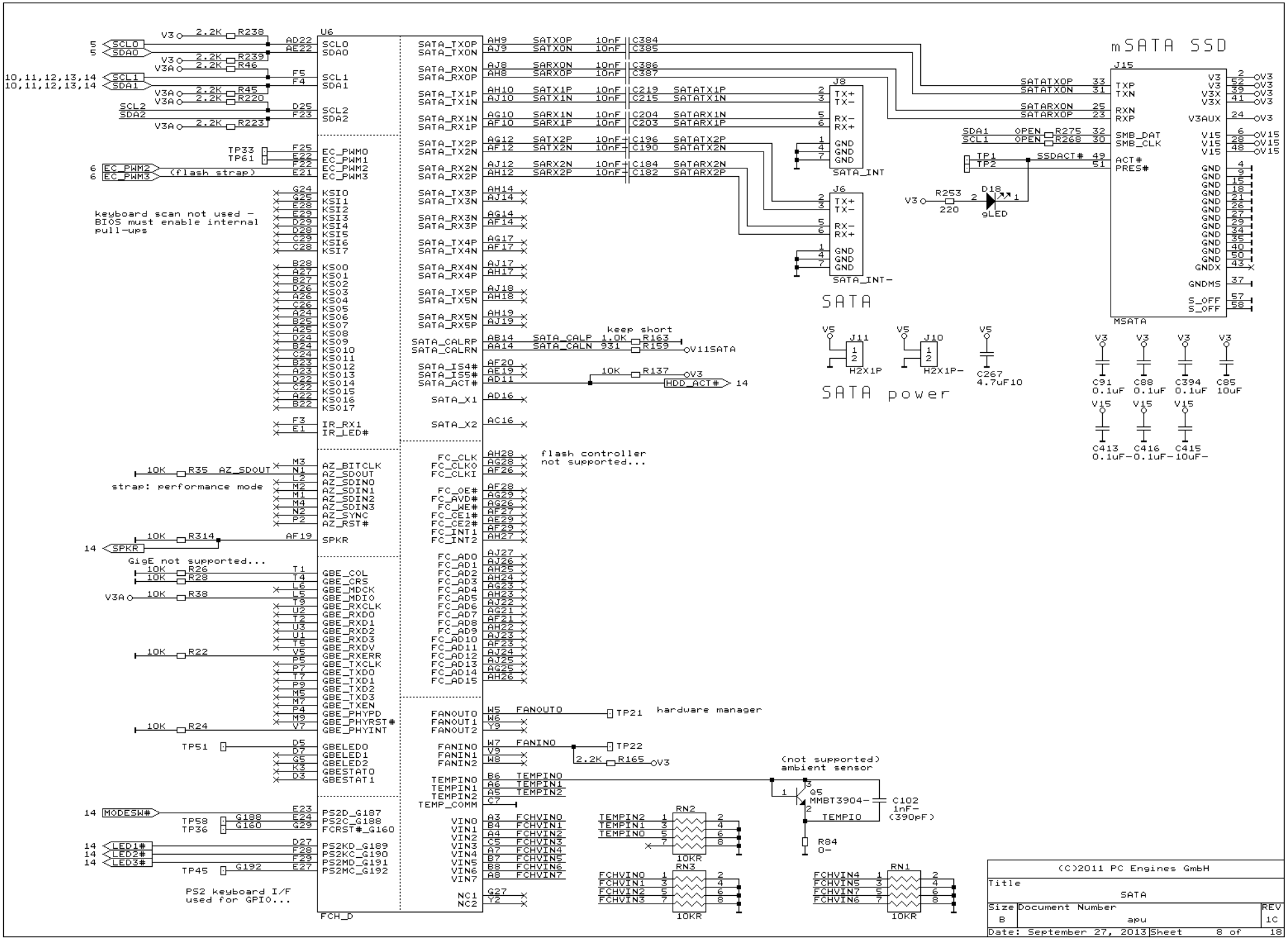
U6
FCH_D
SCL0
SDA0
SCL1
SDA1
SCL2
SDA2
EC_PWM0
EC_PWM1
EC_PWM2
EC_PWM3
(flash strap)
keyboard scan not used –
BIOS must enable internal
pull-ups
KSI0
KSI1
KSI2
KSI3
KSI4
KSI5
KSI6
KSI7
KSO0
KSO1
KSO2
KSO3
KSO4
KSO5
KSO6
KSO7
KSO8
KSO9
KSO10
KSO11
KSO12
KSO13
KSO14
KSO15
KSO16
KSO17
IR_RX1
IR_LED#
strap: performance mode
AZ_BITCLK
AZ_SDOUT
AZ_SDIN0
AZ_SDIN1
AZ_SDIN2
AZ_SDIN3
AZ_SYNC
AZ_RST#
SPKR
GigE not supported...
GBE_COL
GBE_CRS
GBE_MDCK
GBE_MDIO
GBE_RXCLK
GBE_RXD0
GBE_RXD1
GBE_RXD2
GBE_RXD3
GBE_RXDV
GBE_RXERR
GBE_TXCLK
GBE_TXD0
GBE_TXD1
GBE_TXD2
GBE_TXD3
GBE_TXEN
GBE_PHYPD
GBE_PHYRST#
GBE_PHYINT
GBELED0
GBELED1
GBELED2
GBESTAT0
GBESTAT1
PS2D_G187
PS2C_G188
FCRST#_G160
PS2KD_G189
PS2KC_G190
PS2MD_G191
PS2MC_G192
PS2 keyboard I/F
used for GPIO...
SATA_TX0P
SATA_TX0N
SATA_RX0N
SATA_RX0P
SATA_TX1P
SATA_TX1N
SATA_RX1N
SATA_RX1P
SATA_TX2P
SATA_TX2N
SATA_RX2N
SATA_RX2P
SATA_TX3P
SATA_TX3N
SATA_RX3N
SATA_RX3P
SATA_TX4P
SATA_TX4N
SATA_RX4N
SATA_RX4P
SATA_TX5P
SATA_TX5N
SATA_RX5N
SATA_RX5P
SATA_CALRP
SATA_CALRN
SATA_IS4#
SATA_IS5#
SATA_ACT#
SATA_X1
SATA_X2
keep short
V11SATA
HDD_ACT#
SATA_INT
SATA_INT-
SATA
SATA power
mSATA SSD
MSATA
flash controller
not supported...
FC_CLK
FC_CLK0
FC_CLKI
FC_OE#
FC_AVD#
FC_WE#
FC_CE1#
FC_CE2#
FC_INT1
FC_INT2
FC_AD0
FC_AD1
FC_AD2
FC_AD3
FC_AD4
FC_AD5
FC_AD6
FC_AD7
FC_AD8
FC_AD9
FC_AD10
FC_AD11
FC_AD12
FC_AD13
FC_AD14
FC_AD15
hardware manager
(not supported)
ambient sensor
FANOUT0
FANOUT1
FANOUT2
FANIN0
FANIN1
FANIN2
TEMPIN0
TEMPIN1
TEMPIN2
TEMP_COMM
VIN0
VIN1
VIN2
VIN3
VIN4
VIN5
VIN6
VIN7
NC1
NC2
(C)2011 PC Engines GmbH
Title
SATA
Size B
Document Number
apu
REV 1C
Date: September 27, 2013
Sheet 8 of 18

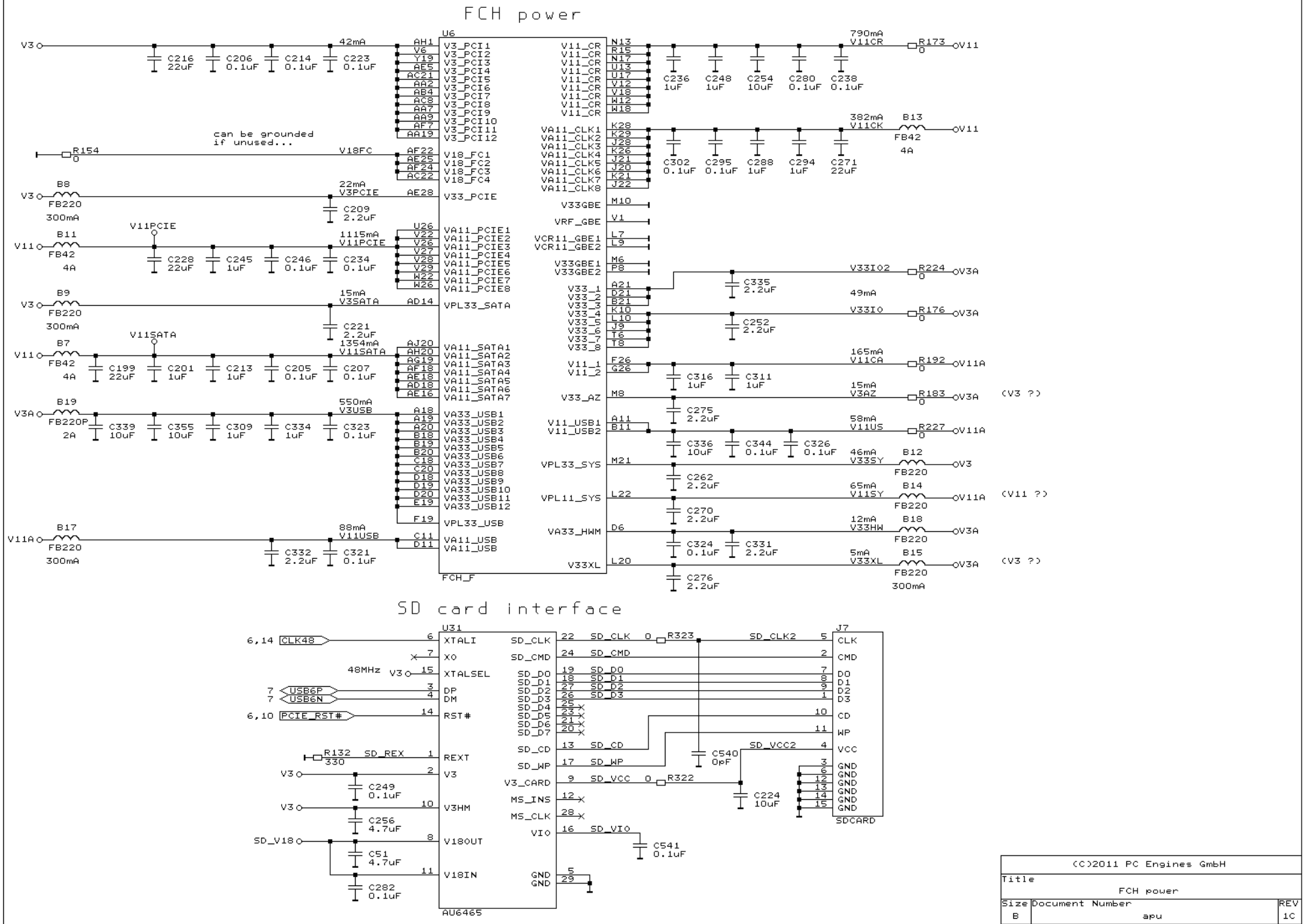

(C)2011 PC Engines GmbH

Title	FCH power	
Size: B	Document Number: apu	REV: 1C
Date: September 25, 2013	Sheet 9 of 18	

HDMI video (option v)

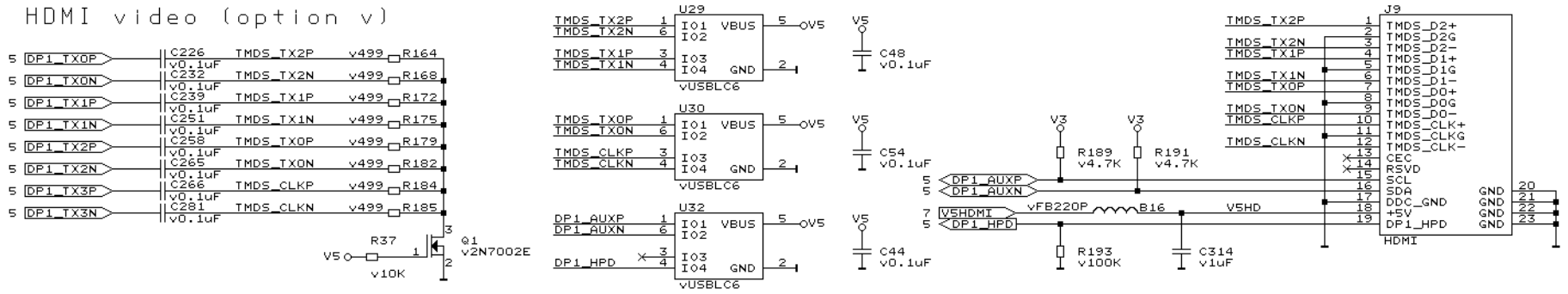

miniPCI Express

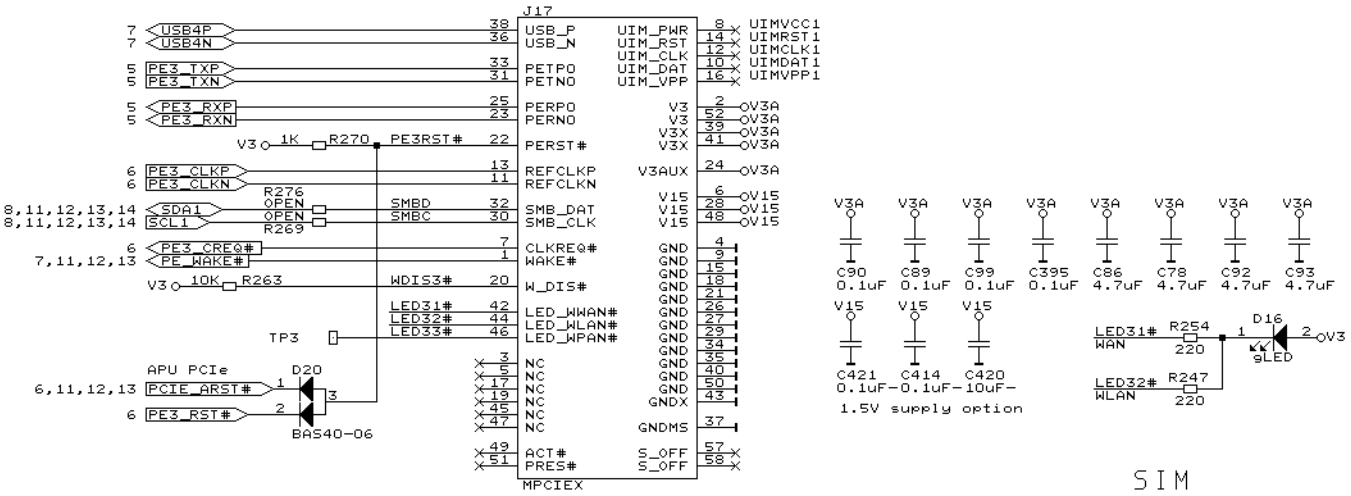

SIM

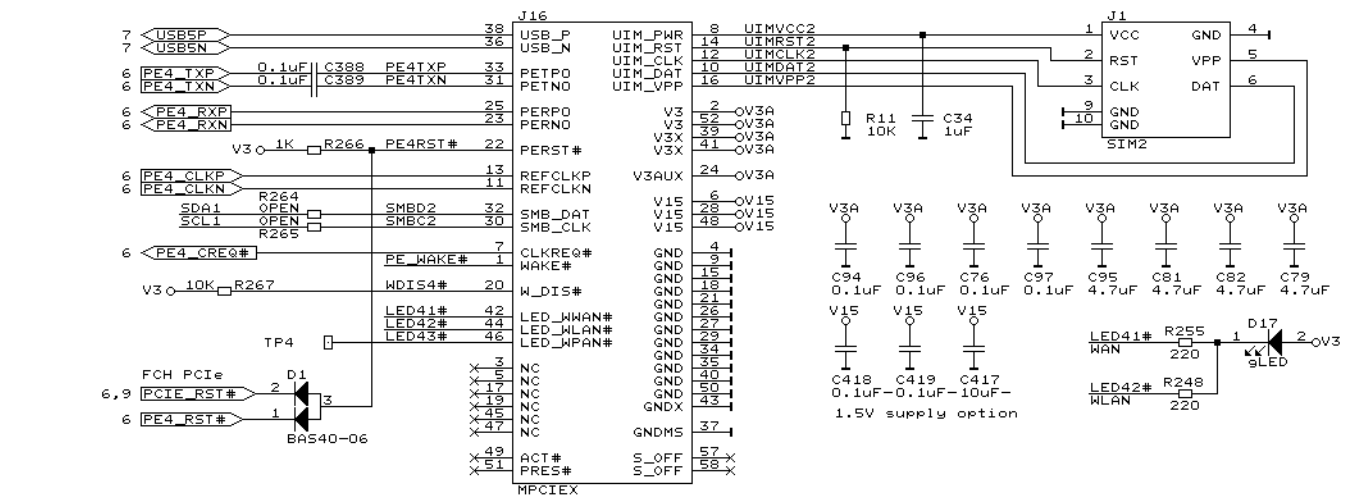

(C)2011 PC Engines GmbH

Title	HDMI video, miniPCI express	
Size B	Document Number apu	REV 1C
Date: September 2, 2013	Sheet 10 of 18	

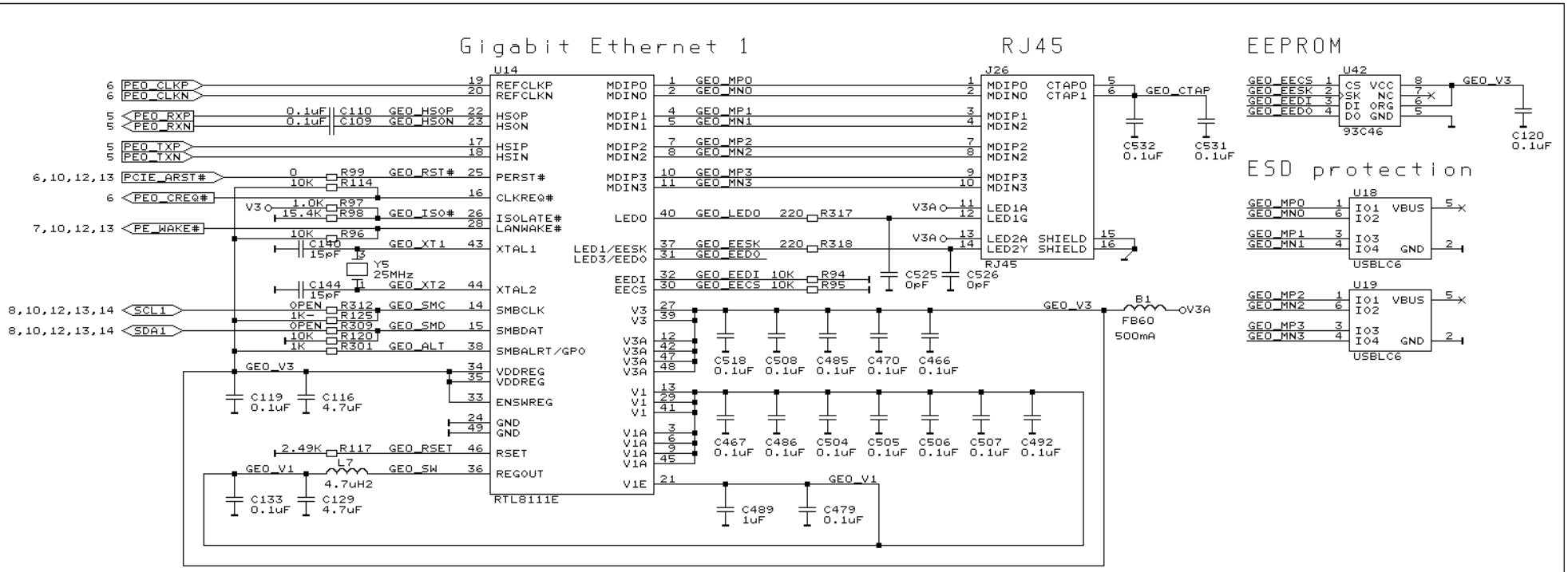

(C)2011 PC Engines GmbH		
Title: Ethernet (1)		
Size: B	Document Number: apu	REV: 1C
Date: September 17, 2013	Sheet 11 of 18	

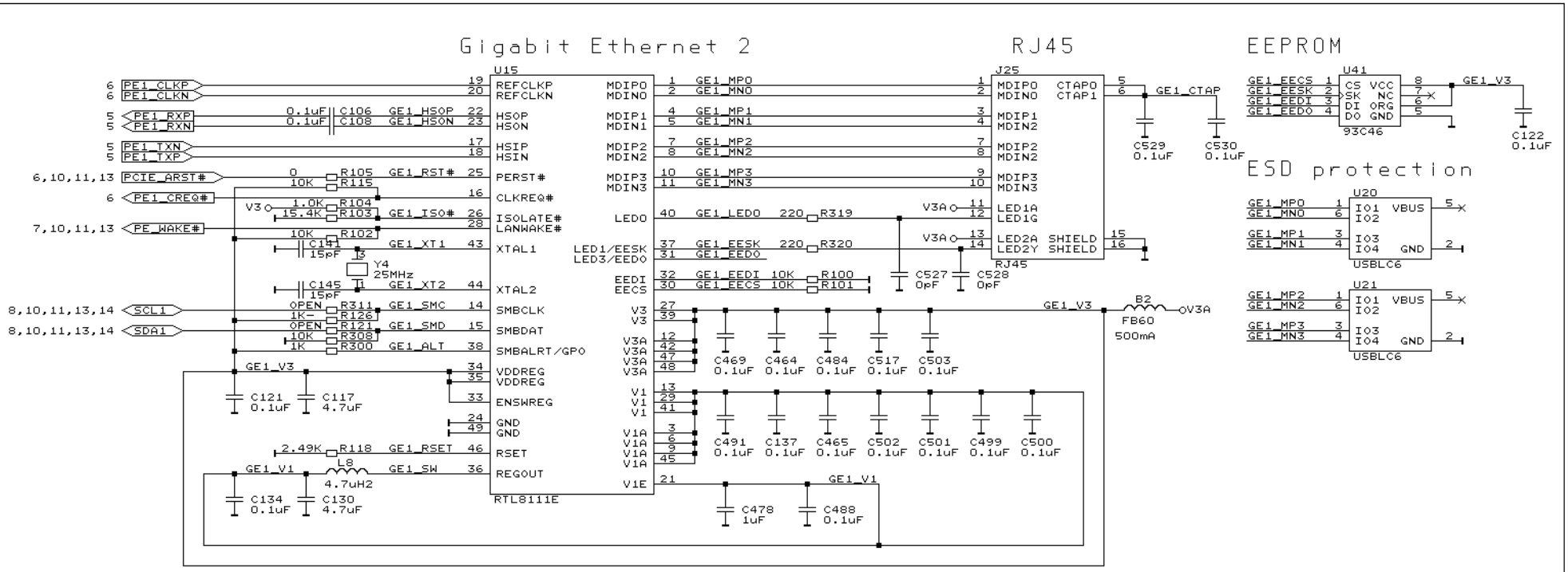

(C)2011 PC Engines GmbH			
Title: Ethernet (2)			
Size: B	Document Number: apu		REV: 1C
Date: September 17, 2013	Sheet 12 of 18		

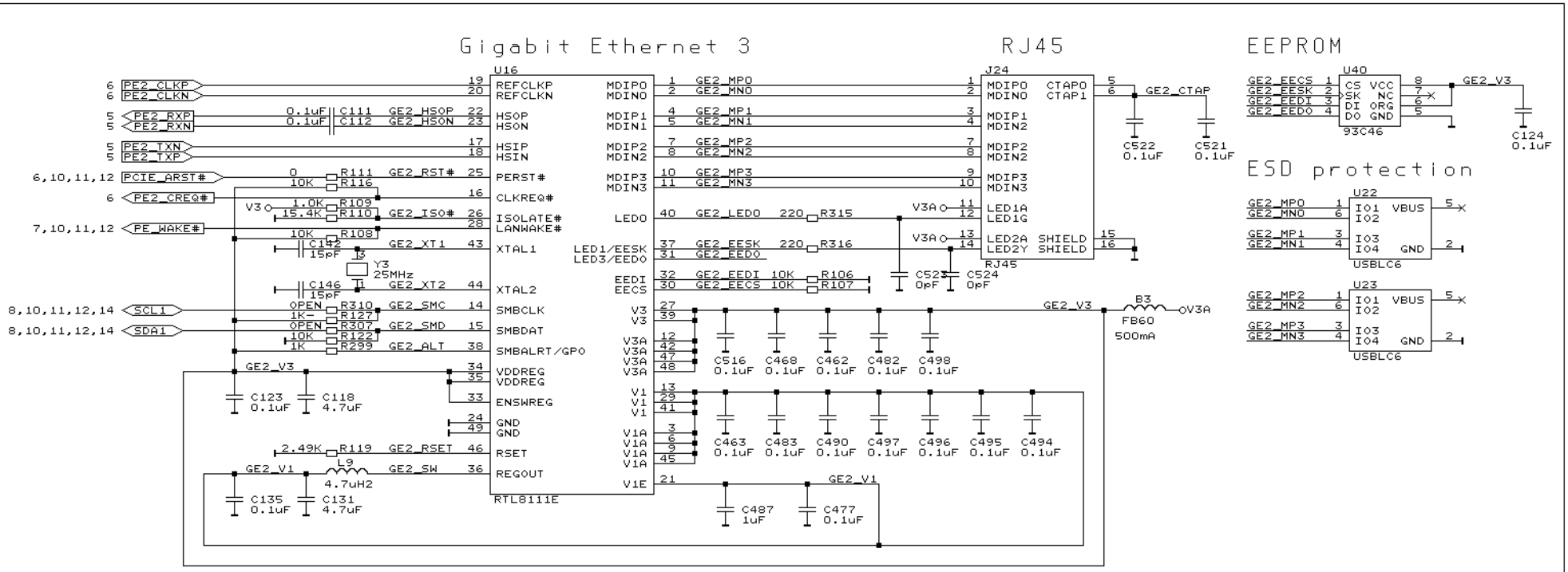

(C)2011 PC Engines GmbH		
Title: Ethernet (3)		
Size: B	Document Number: apu	REV: 1C
Date: September 17, 2013	Sheet 13 of 18	

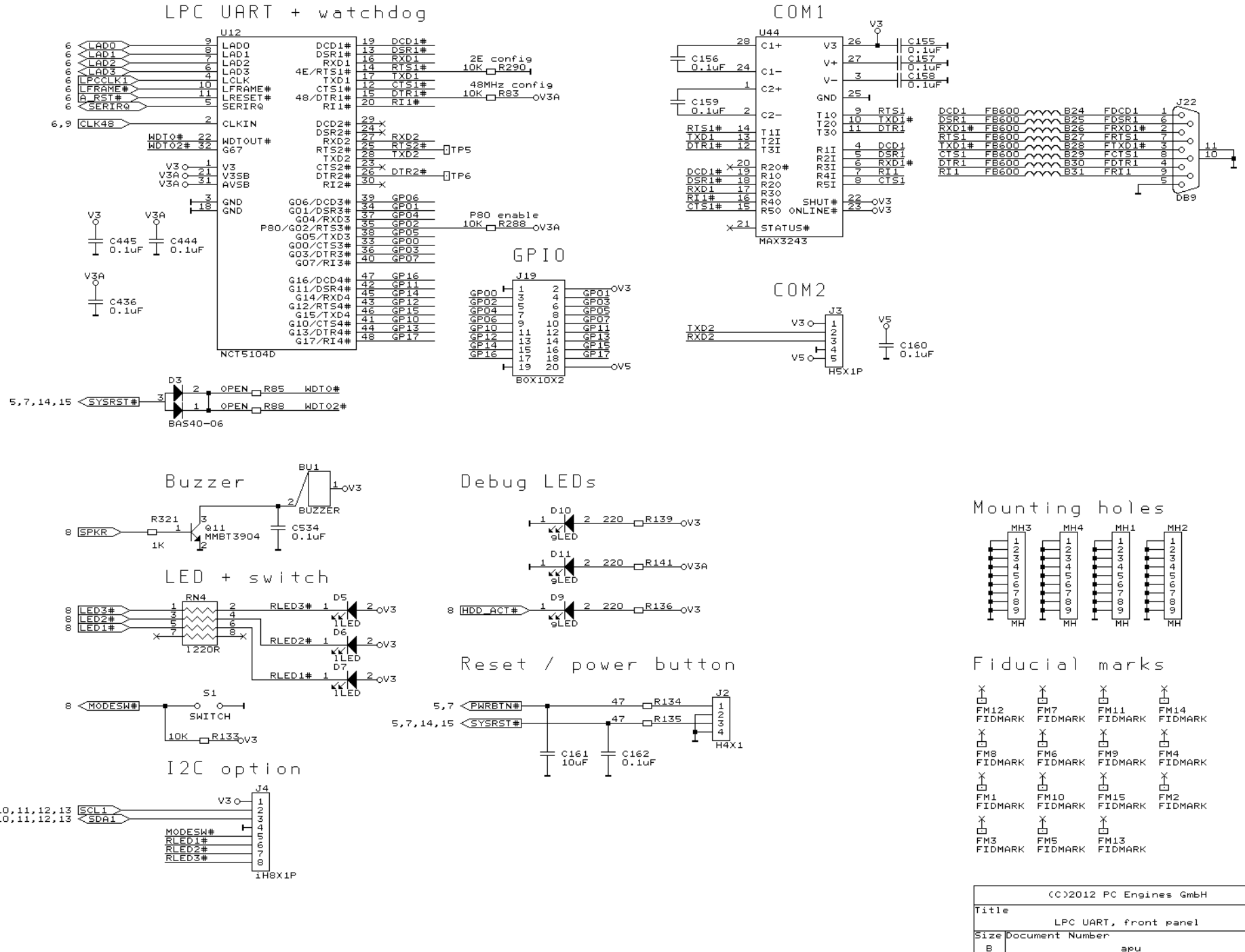

(C)2012 PC Engines GmbH

Title	LPC UART, front panel	
Size B	Document Number apu	REV 1C
Date: September 2, 2013	Sheet 14 of 18	

Power sequence

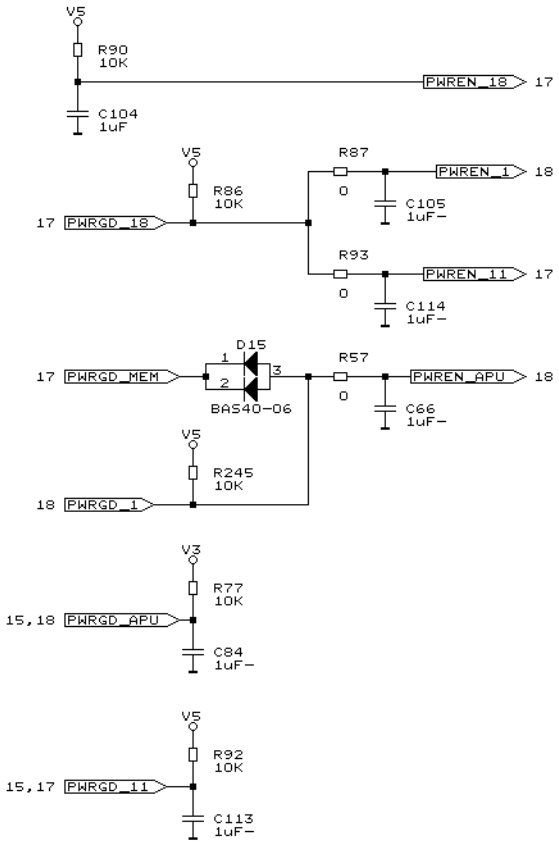

FCH power good

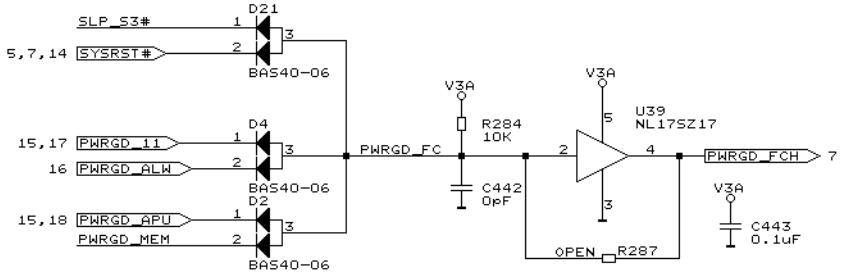

Voltage plane discharge

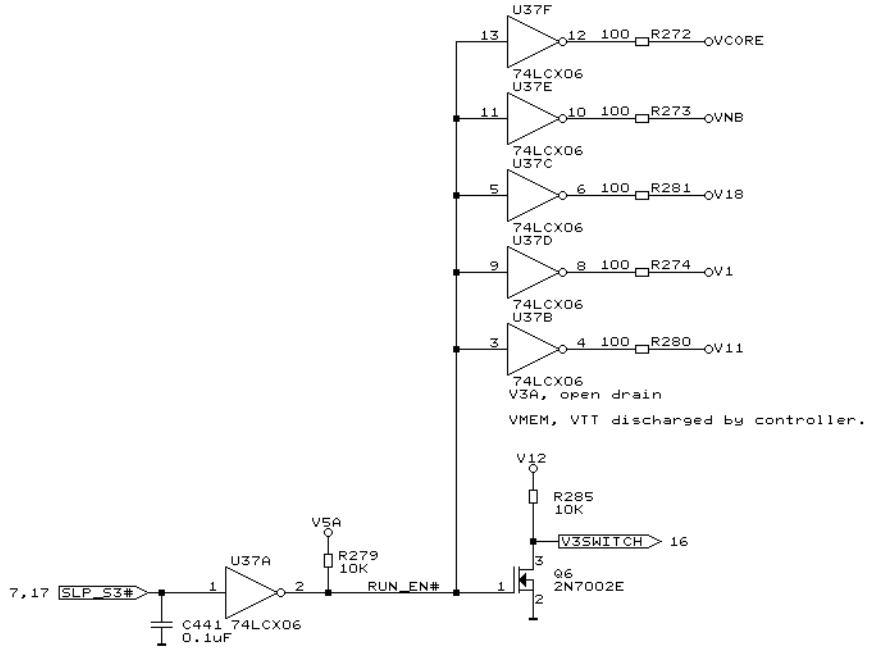

(C)2012 PC Engines GmbH

Title	power sequence	
Size: B	Document Number: apu	REV: 1C
Date: February 7, 2013	Sheet 15 of 18	

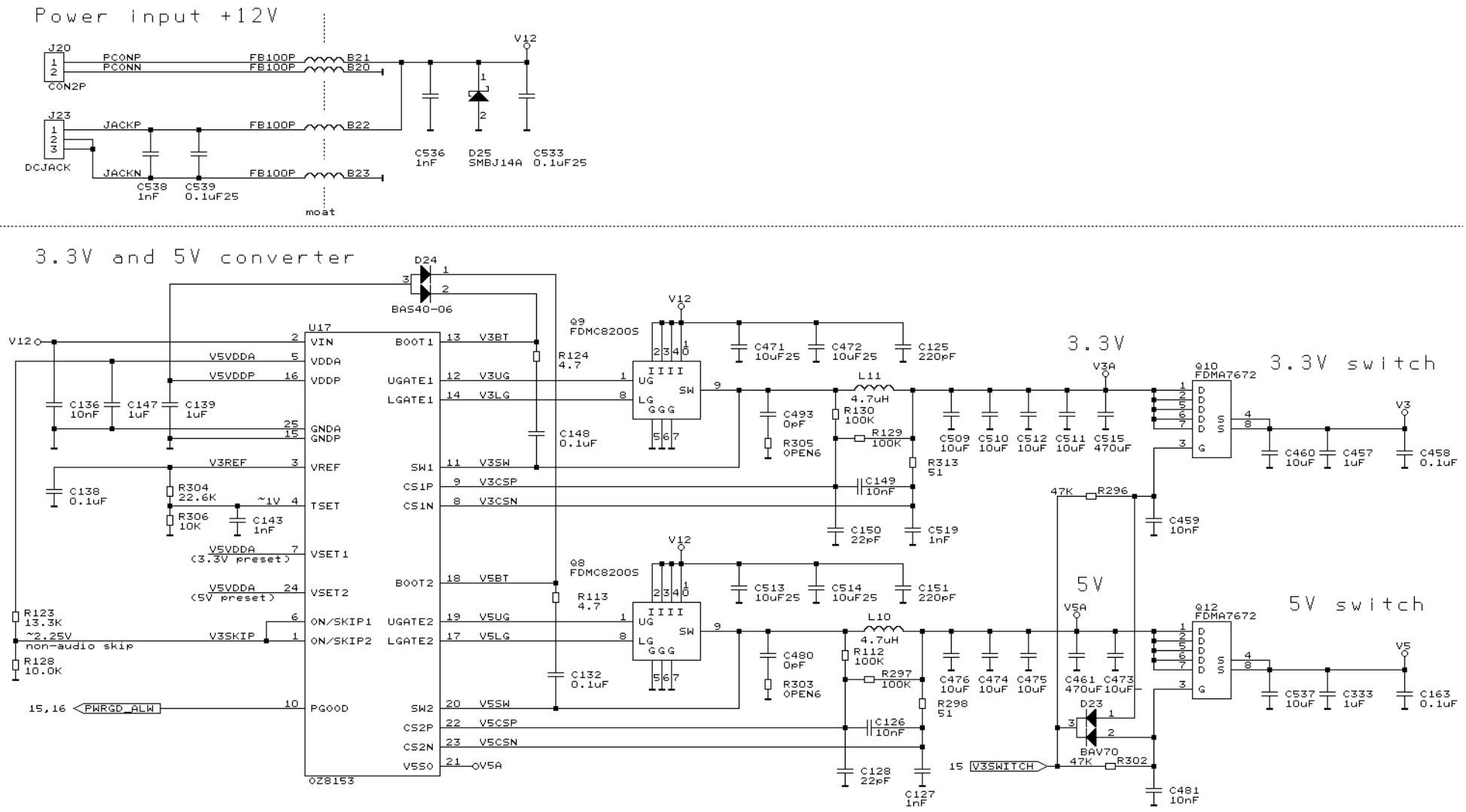

(C)2012 PC Engines GmbH

Title	power in, 3.3V, 5V	
Size B	Document Number apu	REV 1C
Date: September 2, 2013	Sheet 16 of 18	

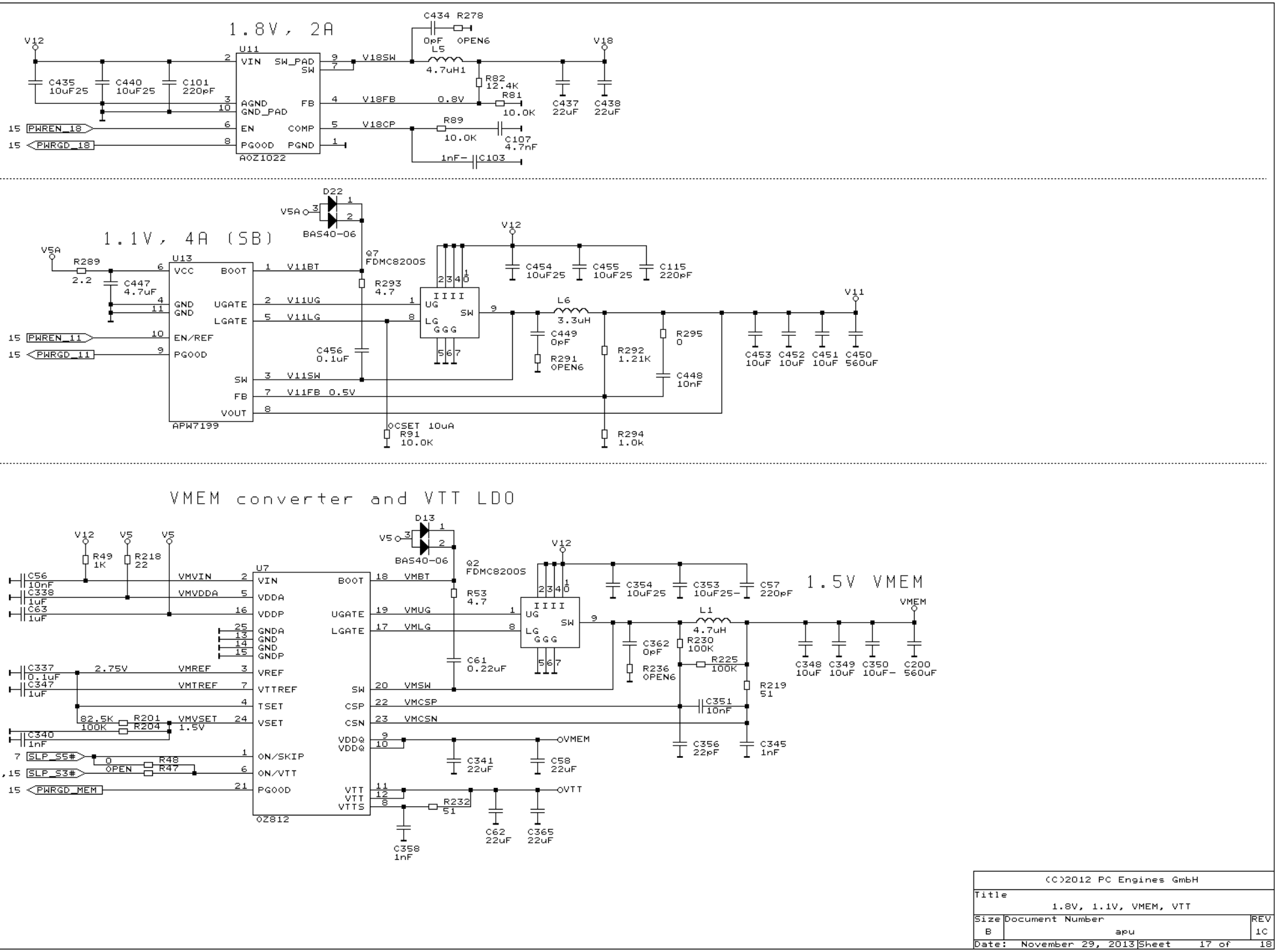

(C)2012 PC Engines GmbH

Title	1.8V, 1.1V, VMEM, VTT	
Size B	Document Number apu	REV 1C
Date: November 29, 2013	Sheet 17 of 18	

VCORE and VNB converter

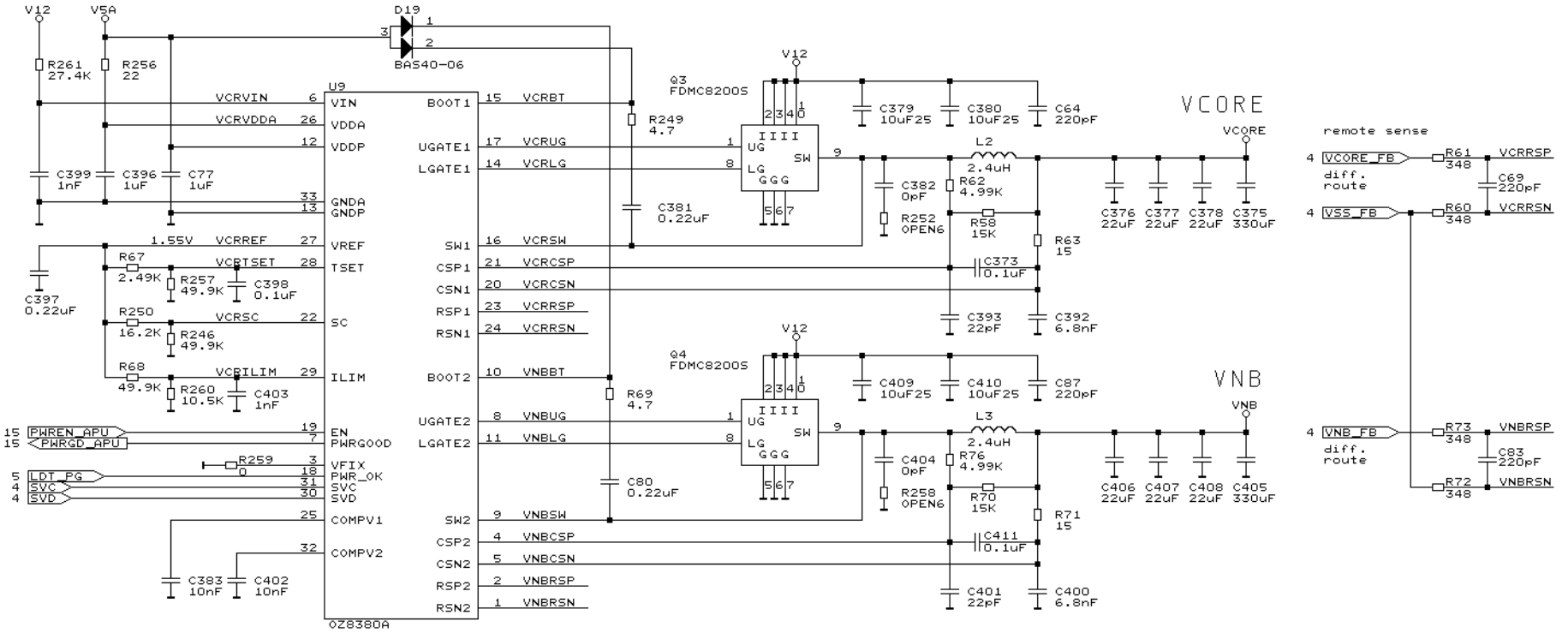

1.05V, 2.5A (CPU)

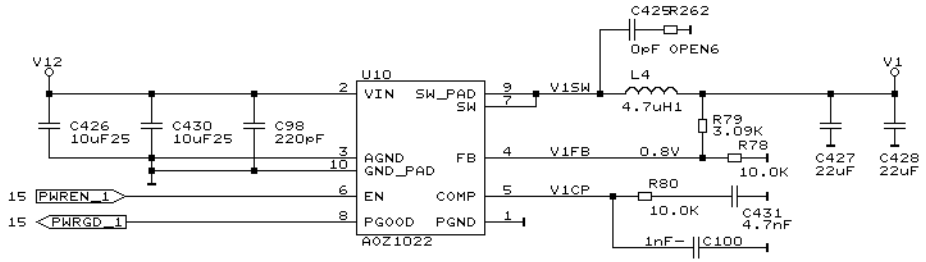

(C)2012 PC Engines GmbH

Title	VCORE, VNB, 1.05V	
Size B	Document Number apu	REV 1C
Date: November 29, 2013	Sheet 18 of 18	