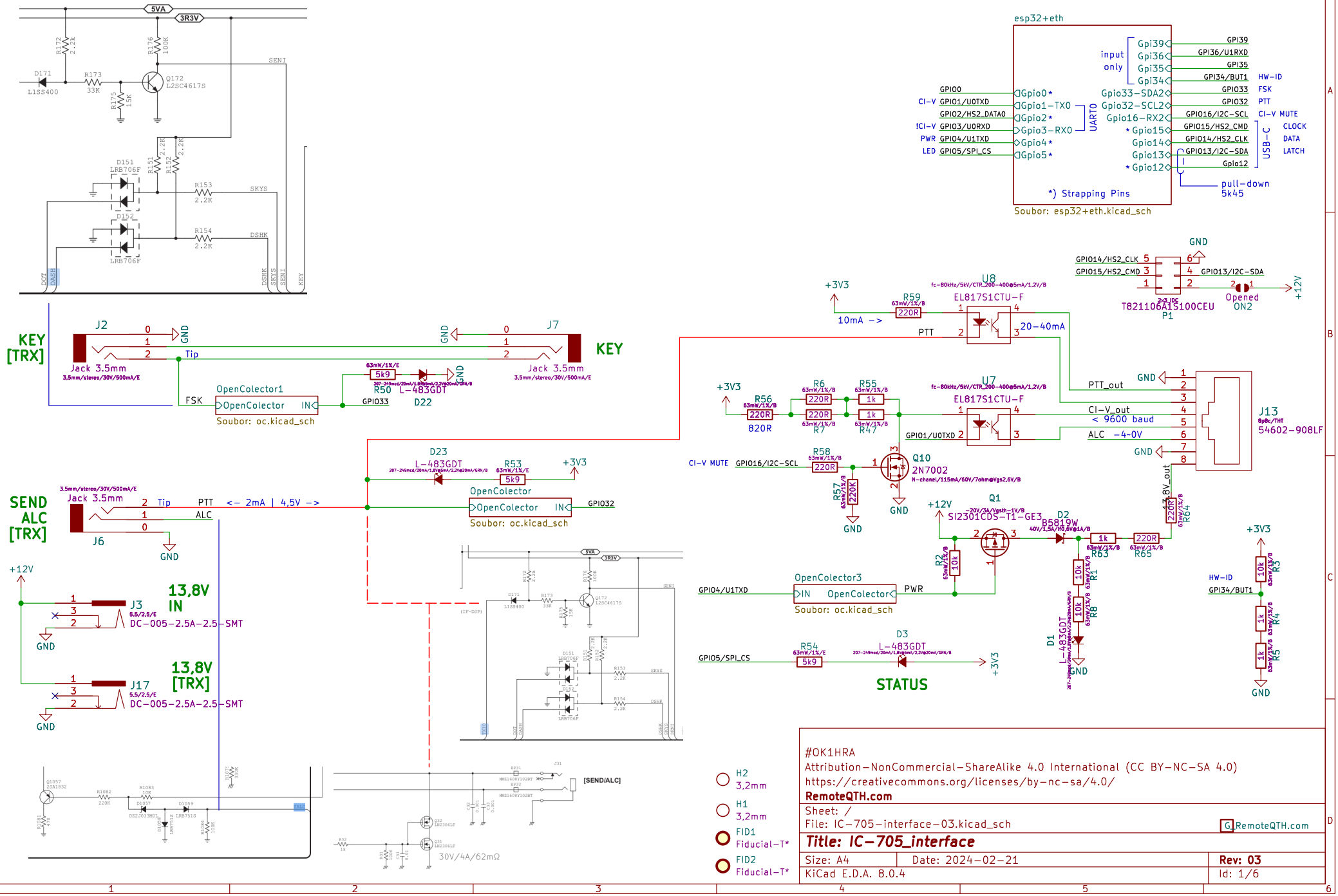

#OK1HRA
Attribution-NonCommercial-ShareAlike 4.0 International (CC BY-NC-SA 4.0)
https://creativecommons.org/licenses/by-nc-sa/4.0/

RemoteQTH.com

Sheet: /
File: IC-705-interface-03.kicad_sch

G RemoteQTH.com

Title: IC-705_interface

Size: A4	Date: 2024-02-21	Rev: 03
KiCad E.D.A. 8.0.4		Id: 1/6

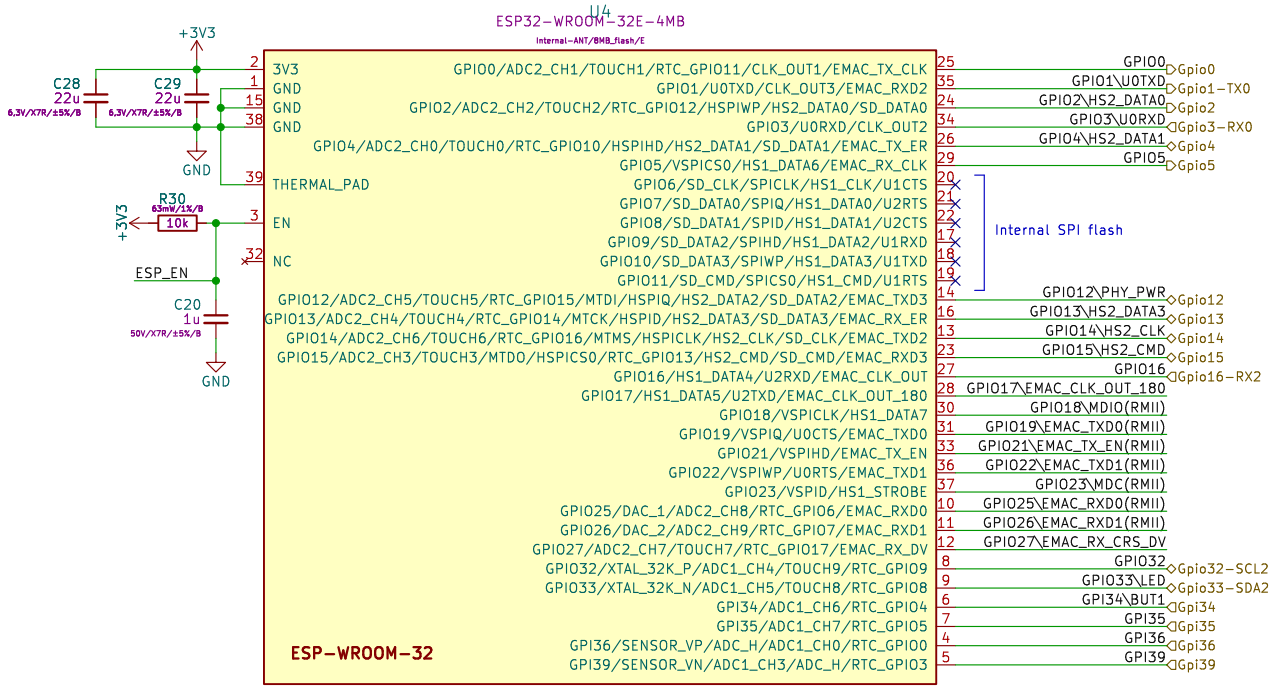

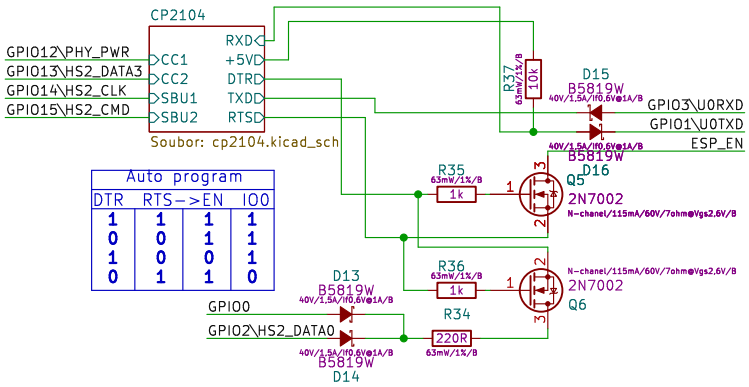

Auto program			
DTR	RTS->EN	IO0	
1	1	1	1
0	0	1	1
1	0	0	1
0	1	1	0

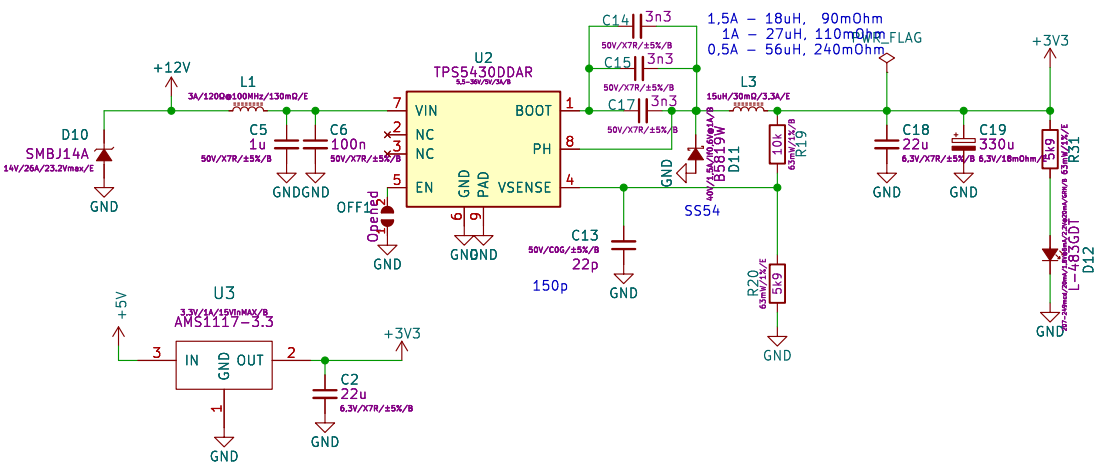

Based on ESP32-POE from OLIMEX
https://www.olimex.com/Products/IoT/ESP32/ESP32-POE/open-source-hardware

#OK1HRA
Attribution-NonCommercial-ShareAlike 4.0 International (CC BY-NC-SA 4.0)
https://creativecommons.org/licenses/by-nc-sa/4.0/
RemoteQTH.com

Sheet: /esp32+eth/
File: esp32+eth.kicad_sch

Title: IC-705_interface

Size: A4	Date: 2024-02-21	Rev: 03
KiCad E.D.A. 8.0.4		Id: 3/6

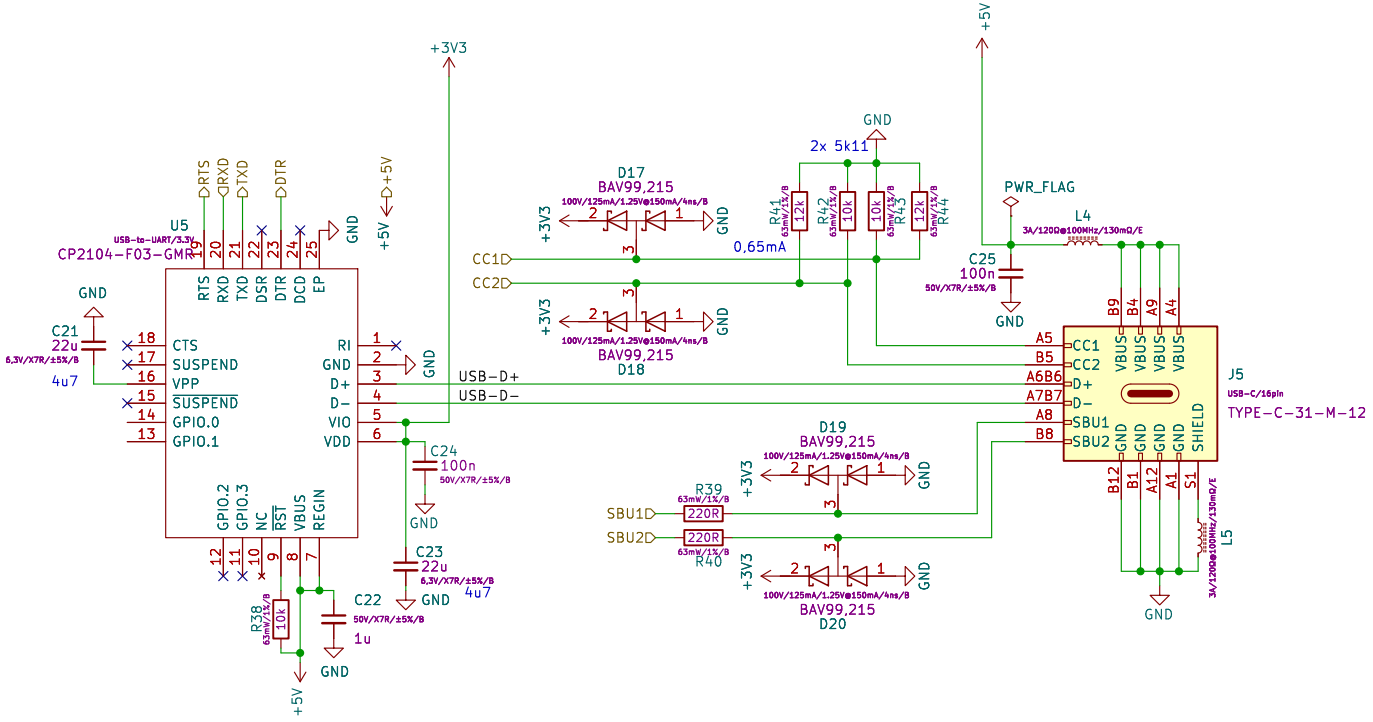

#OK1HRA
Attribution-NonCommercial-ShareAlike 4.0 International (CC BY-NC-SA 4.0)
https://creativecommons.org/licenses/by-nc-sa/4.0/
RemoteQTH.com

Sheet: /esp32+eth/CP2104/
File: cp2104.kicad_sch

Title: IC-705_interface

Size: A4	Date: 2024-02-21	**Rev: 03**
KiCad E.D.A. 8.0.4		Id: 4/6

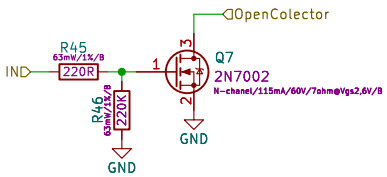

#OK1HRA
Attribution-NonCommercial-ShareAlike 4.0 International (CC BY-NC-SA 4.0)
https://creativecommons.org/licenses/by-nc-sa/4.0/
RemoteQTH.com

Sheet: /OpenColector3/
File: oc.kicad_sch

Title: IC-705_interface

Size: A4	Date: 2024-02-21	**Rev: 03**
KiCad E.D.A. 8.0.4		Id: 5/6

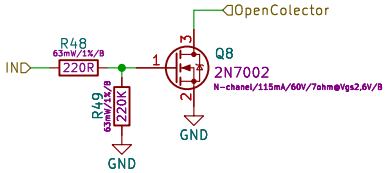

#OK1HRA
Attribution-NonCommercial-ShareAlike 4.0 International (CC BY-NC-SA 4.0)
https://creativecommons.org/licenses/by-nc-sa/4.0/
RemoteQTH.com

Sheet: /OpenColector/
File: oc.kicad_sch

Title: IC-705_interface

Size: A4	Date: 2024-02-21	**Rev: 03**
KiCad E.D.A. 8.0.4		Id: 6/6

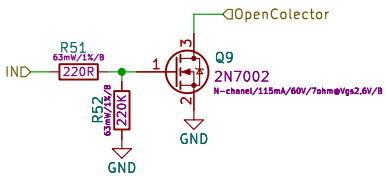

#OK1HRA
Attribution-NonCommercial-ShareAlike 4.0 International (CC BY-NC-SA 4.0)
https://creativecommons.org/licenses/by-nc-sa/4.0/
RemoteQTH.com

Sheet: /OpenColector1/
File: oc.kicad_sch

Title: IC-705_interface

Size: A4	Date: 2024-02-21	**Rev: 03**
KiCad E.D.A. 8.0.4		Id: 7/6