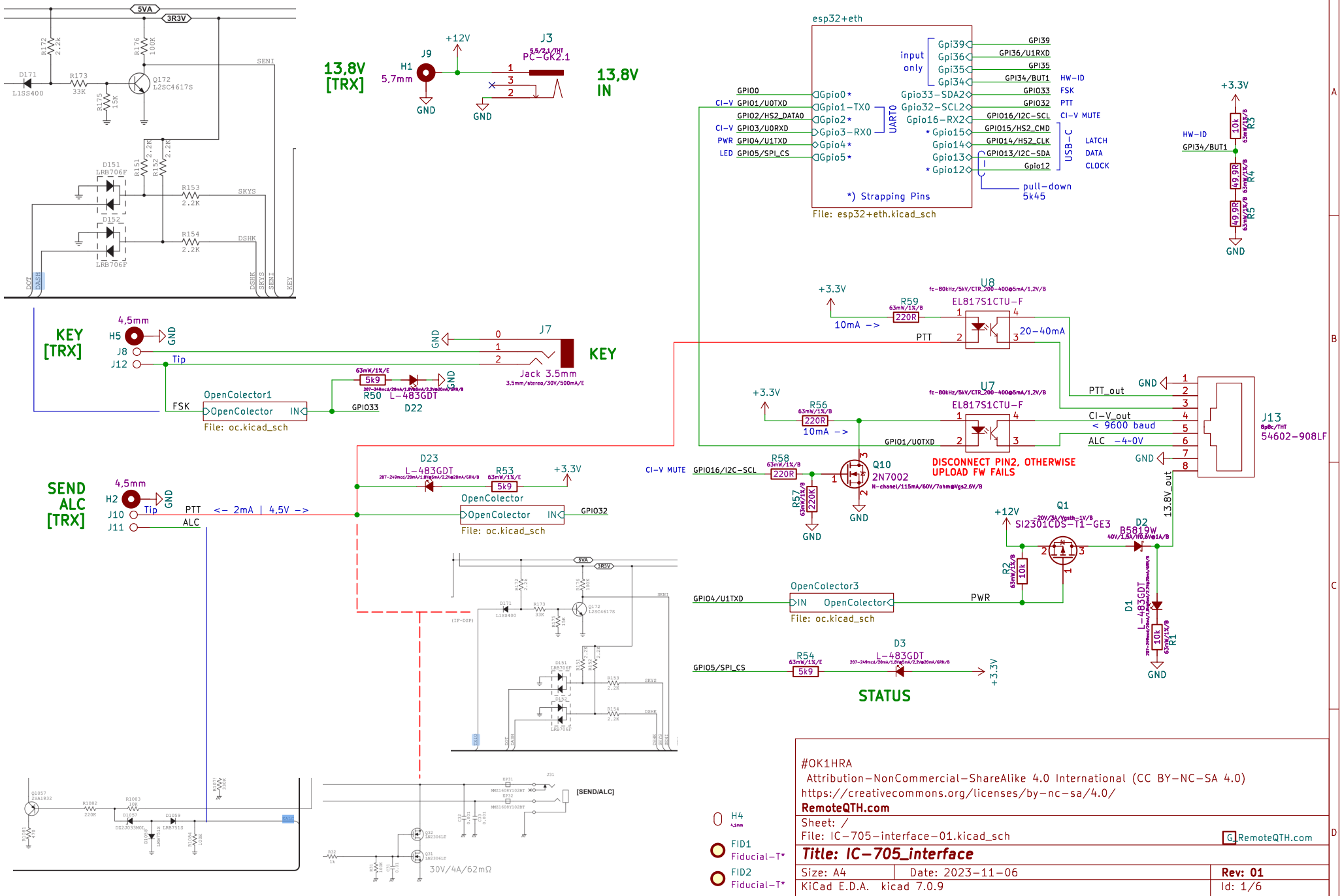
5VA
3R3V
R172 2.2K
R176 100K
D171 L1SS400
R173 33K
R175 15K
Q172 L2SC4617S
SENI
D151 LRB706F
D152 LRB706F
R151 2.2K
R152 2.2K
R153 2.2K
R154 2.2K
SKYS
DSHK
DOT
DASH
KEY
13,8V [TRX]
H1 5,7mm
J9
+12V
GND
J3 PC-GK2.1
13,8V IN
esp32+eth
input only
Gpi39
Gpi36
Gpi35
Gpi34
Gpio33-SDA2
Gpio32-SCL2
Gpio16-RX2
Gpio15
Gpio14
Gpio13
Gpio12
GPIO0
CI-V GPIO1/U0TXD
GPIO2/HS2_DATA0
CI-V GPIO3/U0RXD
PWR GPIO4/U1TXD
LED GPIO5/SPI_CS
Gpio0
Gpio1-TX0
Gpio2
Gpio3-RX0
Gpio4
Gpio5
UART0
USB-C
GPI39
GPI36/U1RXD
GPI35
GPI34/BUT1
GPIO33
GPIO32
GPIO16/I2C-SCL
GPIO15/HS2_CMD
GPIO14/HS2_CLK
GPIO13/I2C-SDA
HW-ID
FSK
PTT
CI-V MUTE
LATCH
DATA
CLOCK
pull-down 5k45
*) Strapping Pins
File: esp32+eth.kicad_sch
+3.3V
R3 10k
R4 49.9R
R5 49.9R
KEY [TRX]
H5 4,5mm
J8
J12
Tip
J7
Jack 3.5mm
3,5mm/stereo/30V/500mA/E
R50 5k9
D22 L-483GDT
OpenColector1
OpenColector
IN
FSK
GPIO33
File: oc.kicad_sch
U8 EL817S1CTU-F
R59 220R
10mA ->
PTT
20-40mA
U7 EL817S1CTU-F
R56 220R
10mA ->
GPIO1/U0TXD
PTT_out
CI-V_out
< 9600 baud
ALC -4-0V
J13 54602-908LF
DISCONNECT PIN2, OTHERWISE UPLOAD FW FAILS
SEND ALC [TRX]
H2 4,5mm
J10
J11
PTT
ALC
<- 2mA | 4,5V ->
D23 L-483GDT
R53 5k9
OpenColector
GPIO32
CI-V MUTE
GPIO16/I2C-SCL
R58 220R
R57 220K
Q10 2N7002
N-chanel/115mA/60V/7ohm@Vgs2,6V/B
13.8V_out
Q1 SI2301CDS-T1-E3
D2 B5819W
R2 10k
GPIO4/U1TXD
OpenColector3
PWR
D1 L-483GDT
R1 10k
GPIO5/SPI_CS
R54 5k9
D3 L-483GDT
STATUS
[SEND/ALC]
30V/4A/62mΩ
H4
FID1 Fiducial-T*
FID2 Fiducial-T*
#OK1HRA
Attribution-NonCommercial-ShareAlike 4.0 International (CC BY-NC-SA 4.0)
https://creativecommons.org/licenses/by-nc-sa/4.0/
RemoteQTH.com
Sheet: /
File: IC-705-interface-01.kicad_sch
G RemoteQTH.com
Title: IC-705_interface
Size: A4
Date: 2023-11-06
Rev: 01
KiCad E.D.A. kicad 7.0.9
Id: 1/6

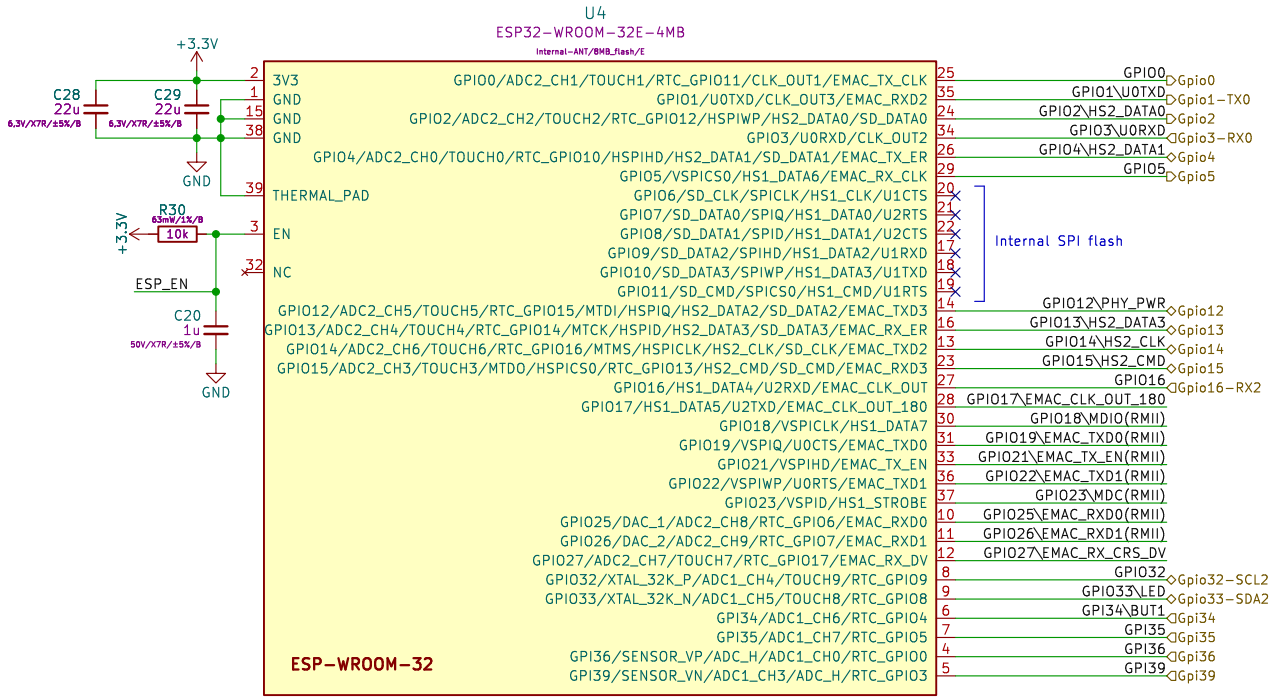

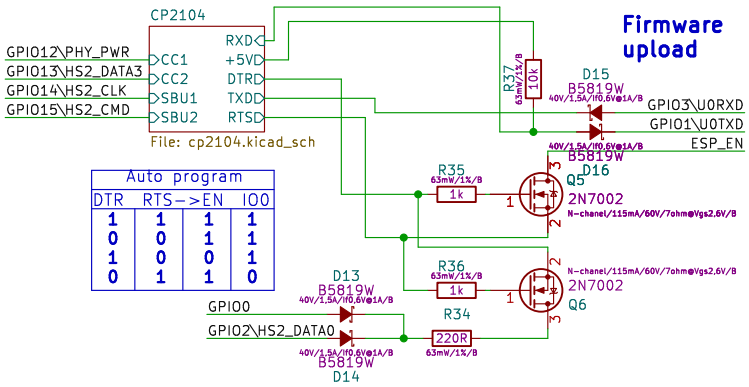

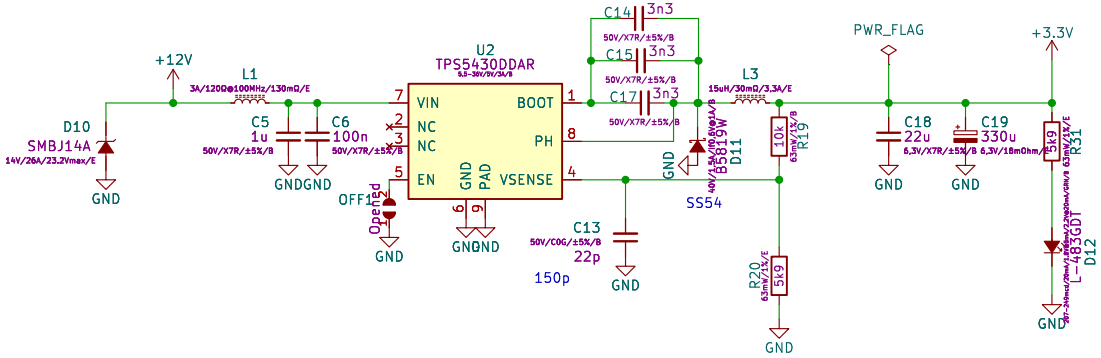

#OK1HRA
Attribution-NonCommercial-ShareAlike 4.0 International (CC BY-NC-SA 4.0)
https://creativecommons.org/licenses/by-nc-sa/4.0/
RemoteQTH.com

Sheet: /esp32+eth/
File: esp32+eth.kicad_sch

Title: IC-705_interface

Size: A4	Date: 2023-11-06	**Rev: 01**
KiCad E.D.A. kicad 7.0.9		Id: 3/6

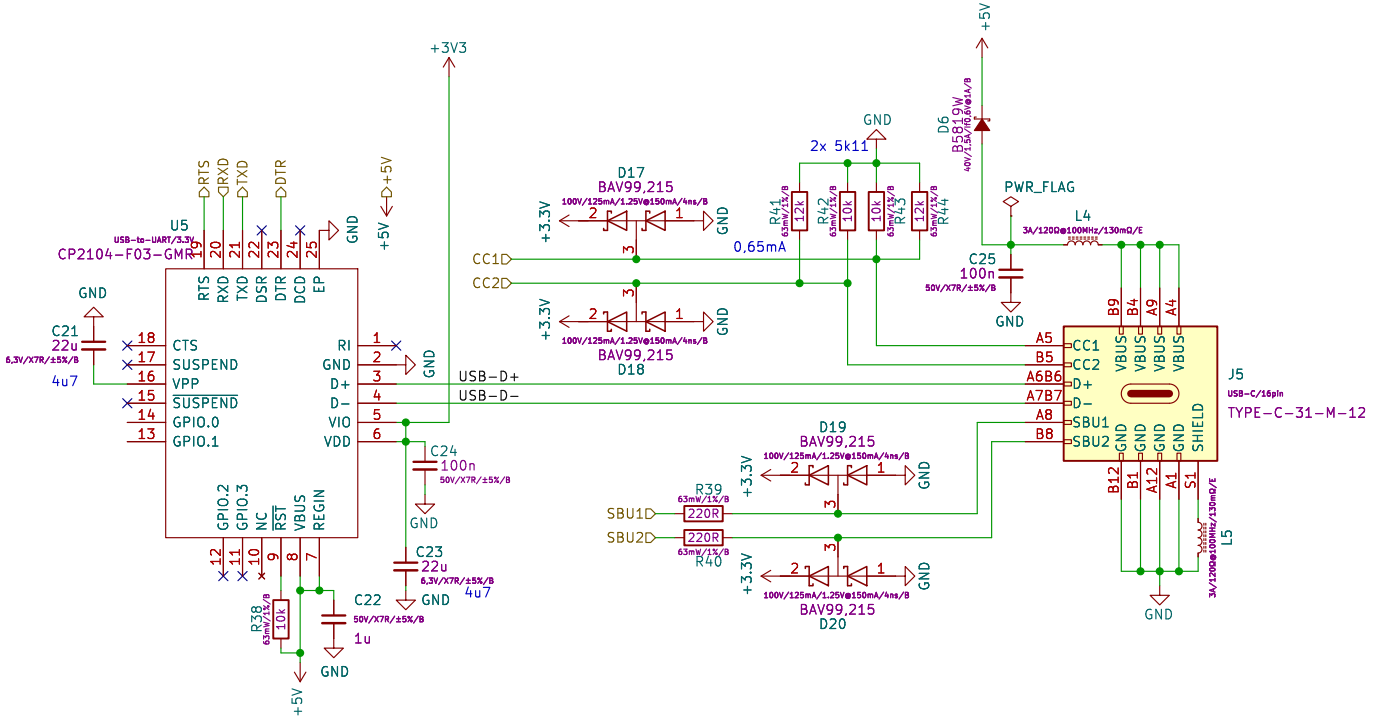

#OK1HRA
Attribution-NonCommercial-ShareAlike 4.0 International (CC BY-NC-SA 4.0)
https://creativecommons.org/licenses/by-nc-sa/4.0/
RemoteQTH.com

Sheet: /esp32+eth/CP2104/
File: cp2104.kicad_sch

Title: IC-705_interface

Size: A4	Date: 2023-11-06	**Rev: 01**
KiCad E.D.A. kicad 7.0.9		Id: 4/6

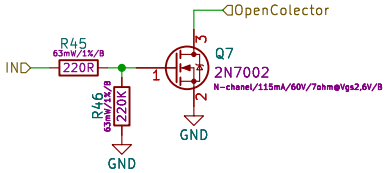

#OK1HRA
Attribution-NonCommercial-ShareAlike 4.0 International (CC BY-NC-SA 4.0)
https://creativecommons.org/licenses/by-nc-sa/4.0/
RemoteQTH.com

Sheet: /OpenColector3/
File: oc.kicad_sch

Title: IC-705_interface

Size: A4	Date: 2023-11-06	**Rev: 01**
KiCad E.D.A. kicad 7.0.9		Id: 5/6

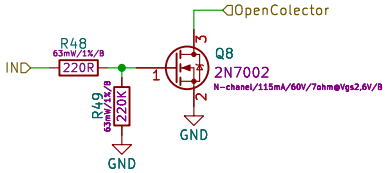

#OK1HRA
Attribution-NonCommercial-ShareAlike 4.0 International (CC BY-NC-SA 4.0)
https://creativecommons.org/licenses/by-nc-sa/4.0/
RemoteQTH.com

Sheet: /OpenColector/
File: oc.kicad_sch

Title: IC-705_interface

Size: A4	Date: 2023-11-06	**Rev: 01**
KiCad E.D.A. kicad 7.0.9		Id: 6/6

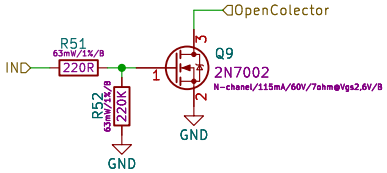

#OK1HRA
Attribution-NonCommercial-ShareAlike 4.0 International (CC BY-NC-SA 4.0)
https://creativecommons.org/licenses/by-nc-sa/4.0/
RemoteQTH.com

Sheet: /OpenColector1/
File: oc.kicad_sch

Title: IC-705_interface

Size: A4	Date: 2023-11-06	**Rev: 01**
KiCad E.D.A. kicad 7.0.9		Id: 7/6