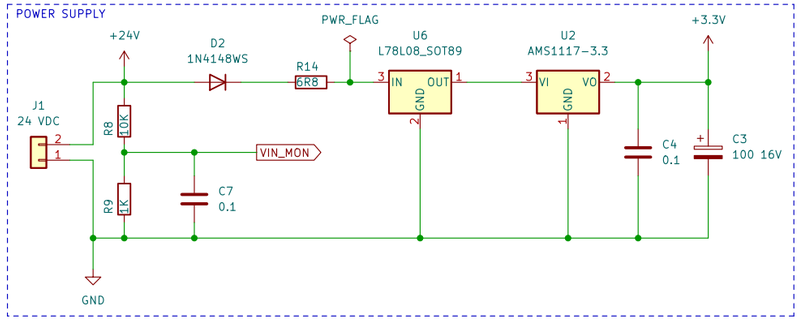

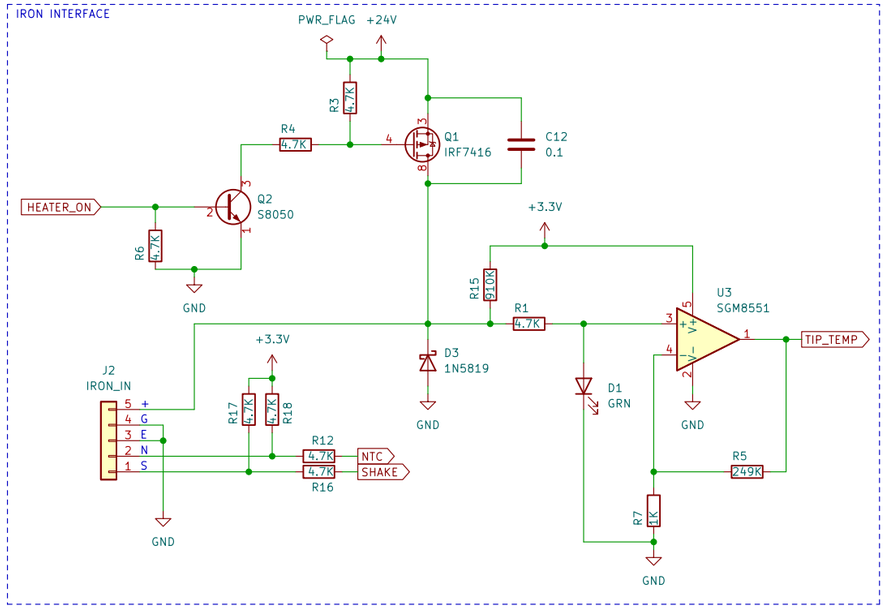

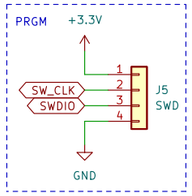

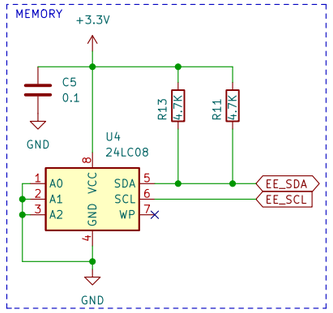

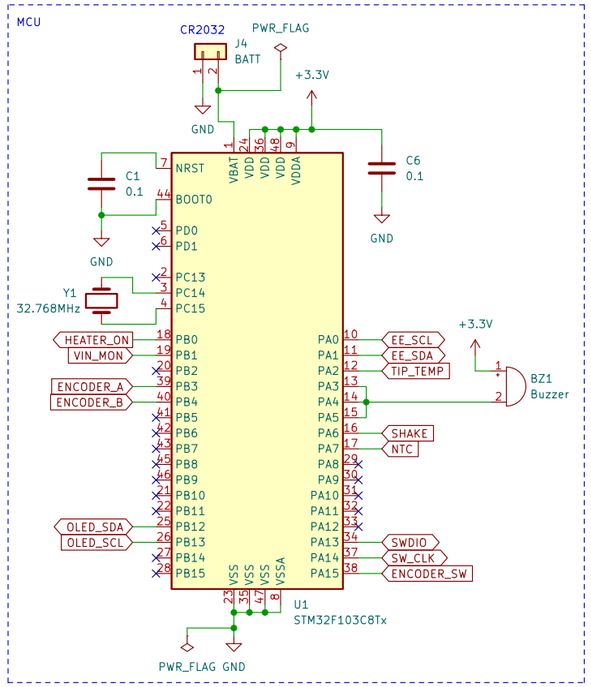

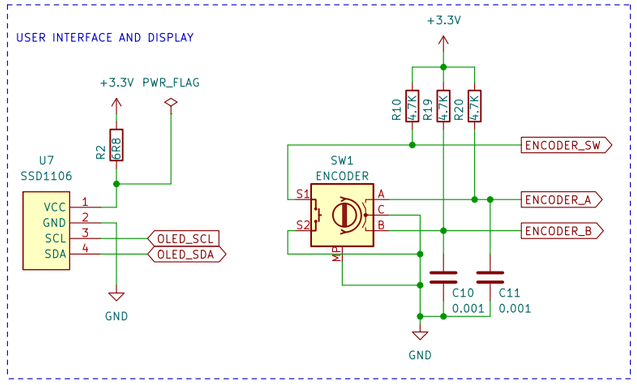

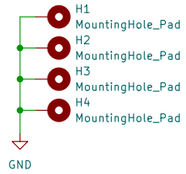

NOTES:

C12 AND D3 ARE MODIFICATIONS
OF THE ORIGINAL KSGER DESIGN
ADDED BY MINSTORM88

THE FOLLOWING REFERENCES ARE DIFFERENT
ON THIS DESIGN FROM MINDSTORM88'S DESIGN.
MINDSTORM88'S REFERENCE IS ON THE LEFT:

R12A – R12
R12B – R16
R12C – R17
R1B – R15
RX – R18

R10 – THERE ARE 3 RESISTORS MARKED AS R10 ON
THE ORIGINAL BOARD. TO STOP KICAD FROM THROWING
AN ANNOTATION ERROR, I HAVE RENAMED TWO OF
THEM TO R19 AND R20.

Replicated by Omega9380
Original Design by MINDSTORM88 on the EEVBlog Forums

Sheet: /
File: KSGER Controller.kicad_sch

Title: KSGER T12 Soldering Iron Heating Controller

Size: A3	Date: 2022-05-04	Rev: 1
KiCad E.D.A. kicad (6.0.4)		Id: 1/1