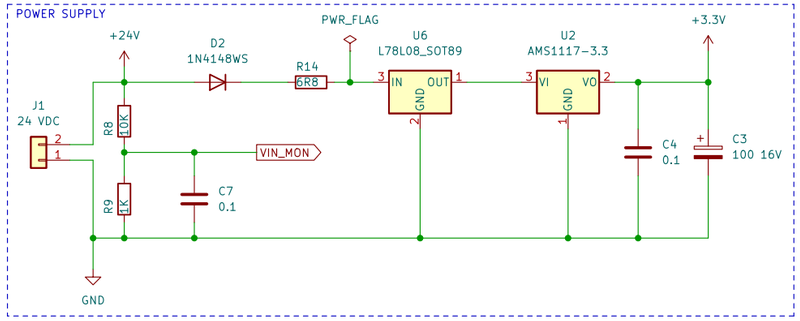

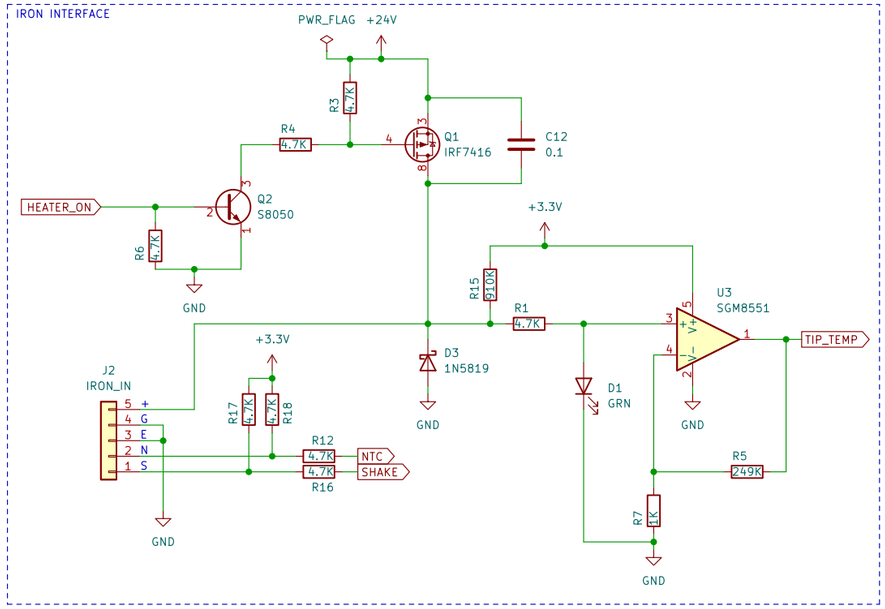

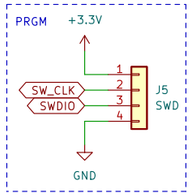

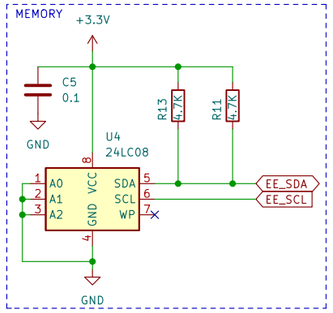

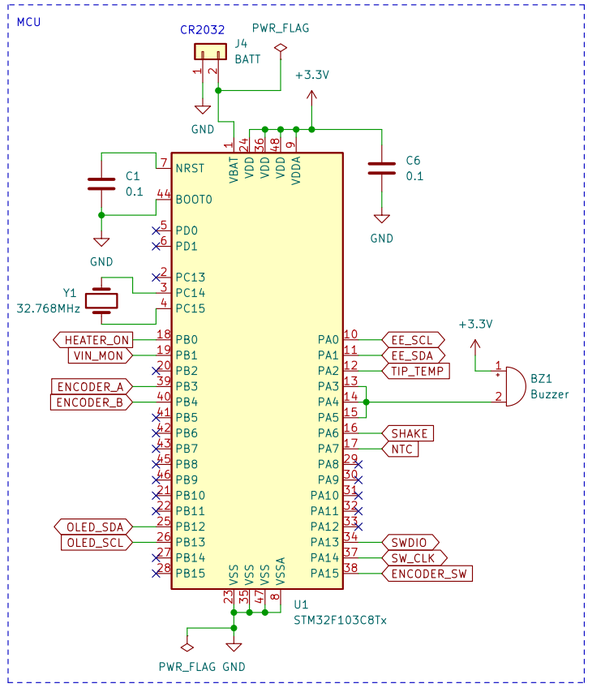

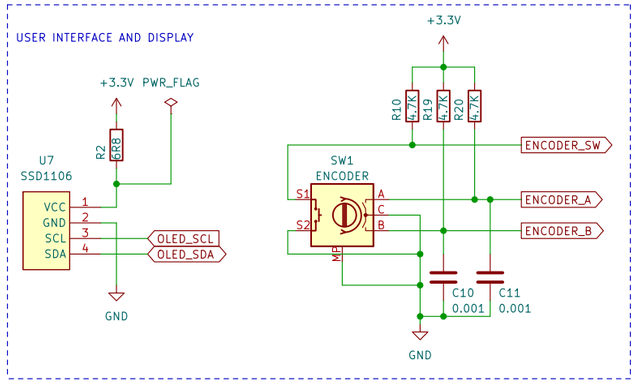

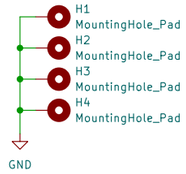

NOTES:

ALL CAPACITOR VALUES IN MICROFARADS

C12 AND D3 ARE MODIFICATIONS
OF THE ORIGINAL KSGER DESIGN
ADDED BY MINSTORM88

THE FOLLOWING REFERENCES ARE DIFFERENT
ON THIS DESIGN FROM MINDSTORM88'S DESIGN.
MINDSTORM88'S REFERENCE IS ON THE LEFT:

R12A – R12
R12B – R16
R12C – R17
R1B – R15
RX – R18

R10 – THERE ARE 3 RESISTORS MARKED AS R10 ON
THE ORIGINAL BOARD. TO STOP KICAD FROM THROWING
AN ANNOTATION ERROR, I HAVE RENAMED TWO OF
THEM TO R19 AND R20.

Replicated by Omega9380
Original Design by MINDSTORM88 on the EEVBlog Forums

Sheet: /
File: KSGER Controller.kicad_sch

Title: KSGER T12 Soldering Iron Heating Controller

Size: A3	Date: 2022-05-04	Rev: 1
KiCad E.D.A. kicad (6.0.4)		Id: 1/1