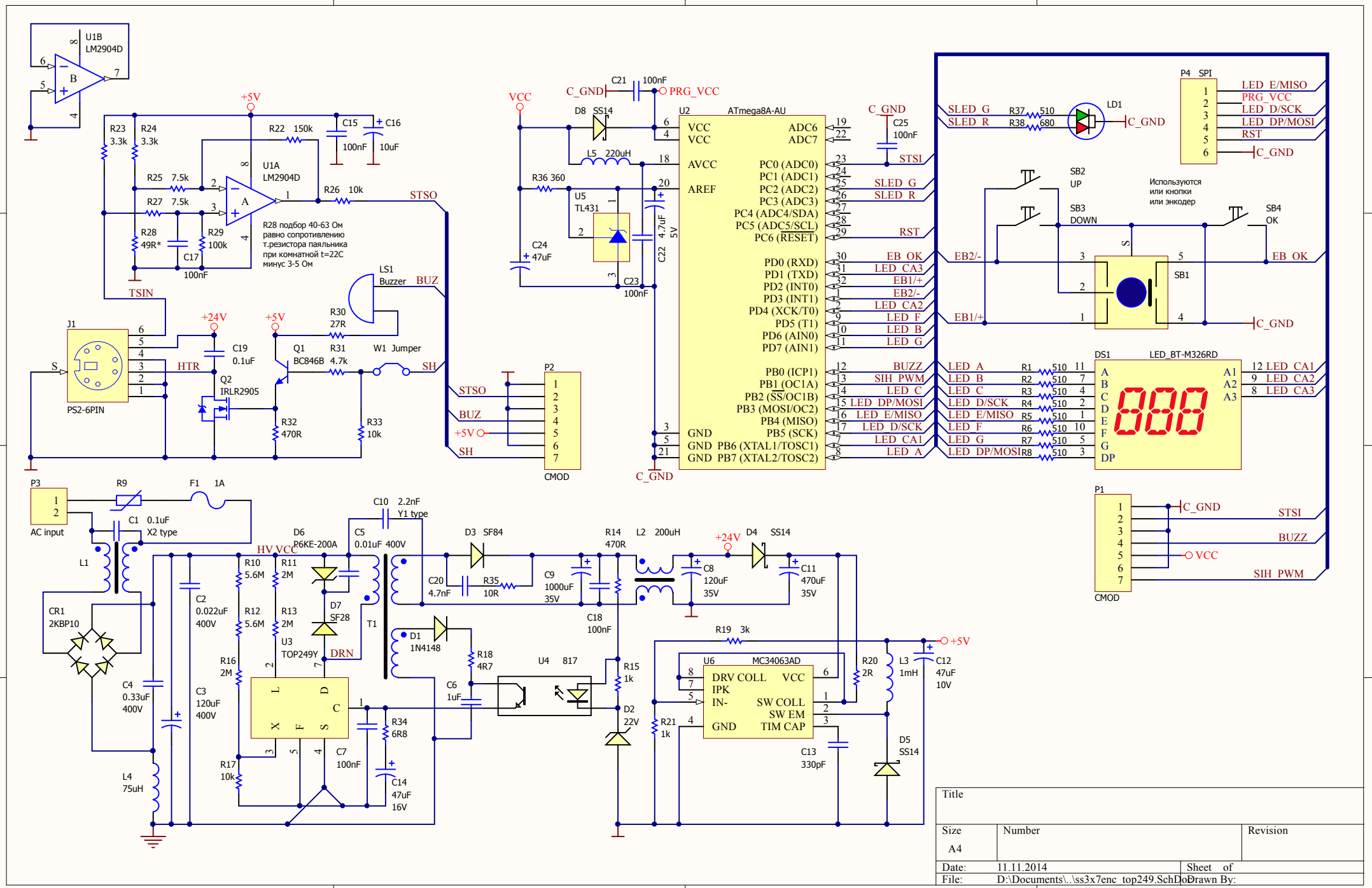

Title		
Size A4	Number	Revision
Date: 11.11.2014	Sheet of	
File: D:\Documents\..\ss3x7enc_top249.SchDoc	Drawn By:	

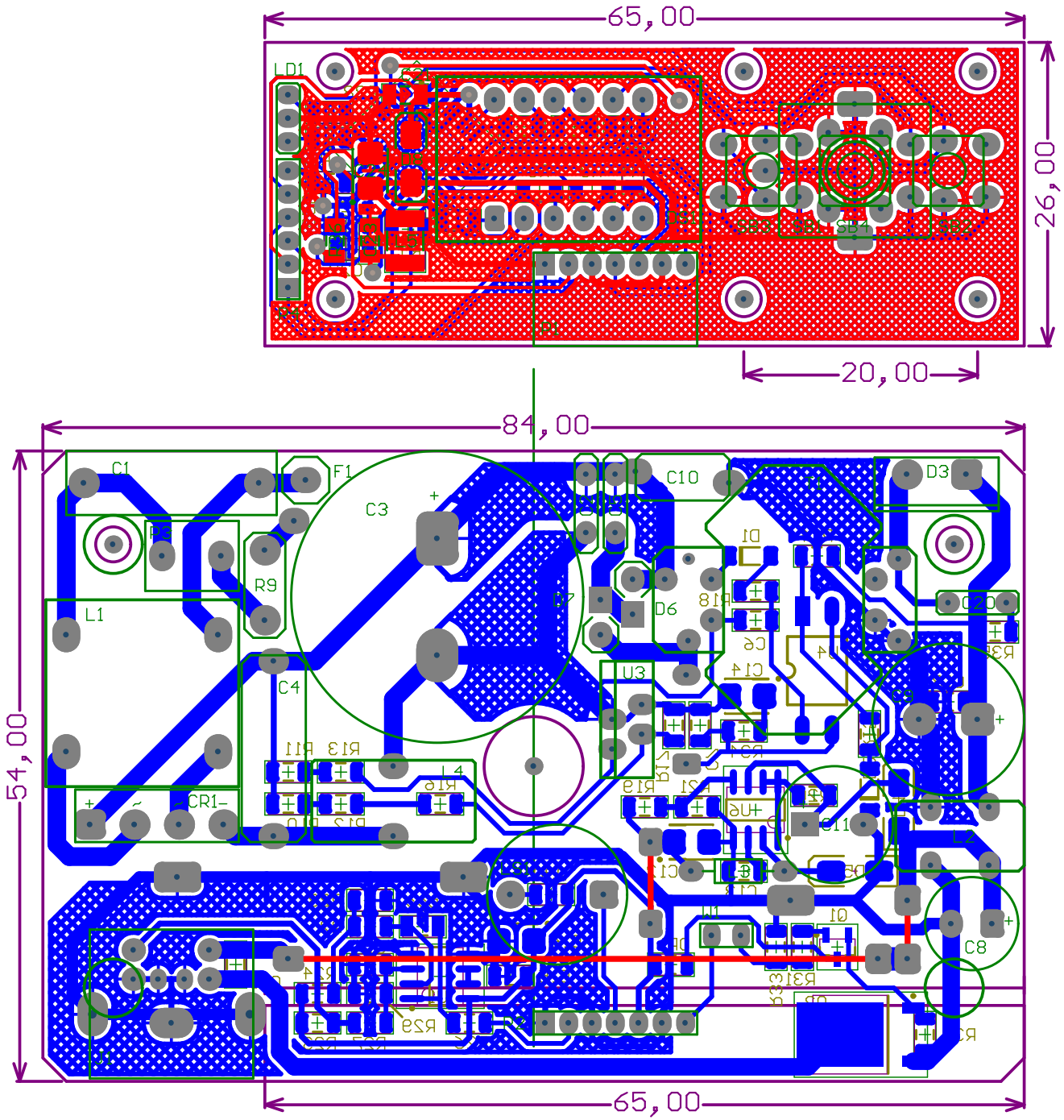
65,00
26,00
20,00
84,00
54,00
65,00
LD1
C1
F1
C3
C10
D3
R9
L1
C4
CR1
D6
C20
C8

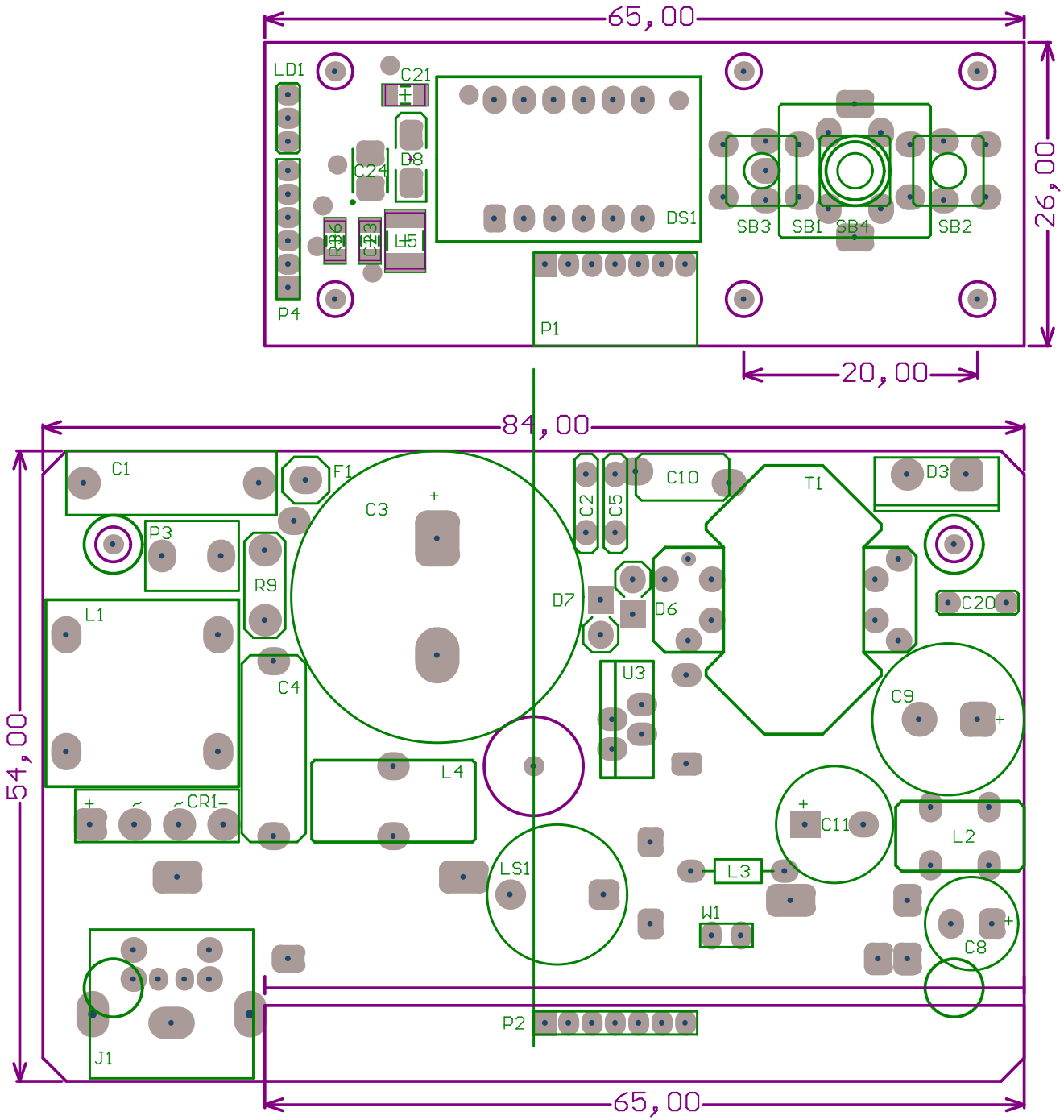
65,00
26,00
20,00
LD1
C21
D8
C24
R6
C3
L5
DS1
SB3
SB1
SB4
SB2
P4
P1
84,00
54,00
65,00
C1
F1
C3
C2
C5
C10
T1
D3
P3
R9
D7
D6
C20
L1
C4
U3
C9
L4
CR1
C11
L2
LS1
L3
W1
C8
J1
P2

65,00
32,00
20,00
R2
R6
R1
R7
R3
R8
U2
R38
R37
C25
U5
R5
R4
C22
84,00
42,00
65,00
R14
D1
R18
C6
R35
U4
C14
C18
R34
C7
R17
D3
D4
U6
R21
R19
C12
D5
C13
Q1
R31
R33
OR1
R32
Q2
R16
R13
R11
R12
R10
R30
R22
R28
R25
C16
C17
C15
U9
R24
C19
R29
R26
R27
R23