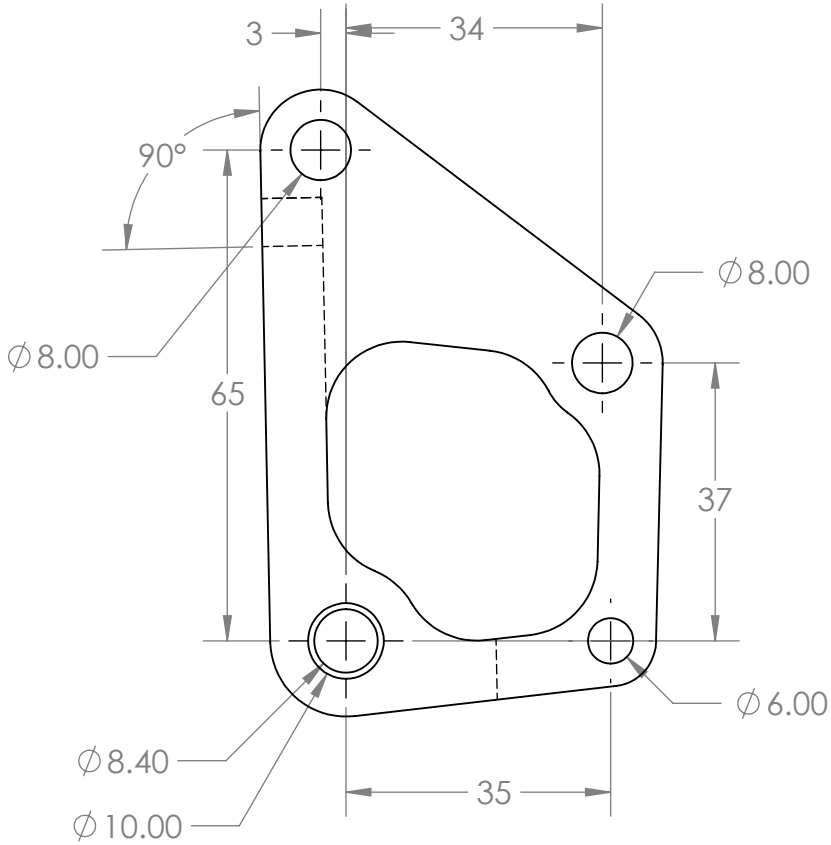

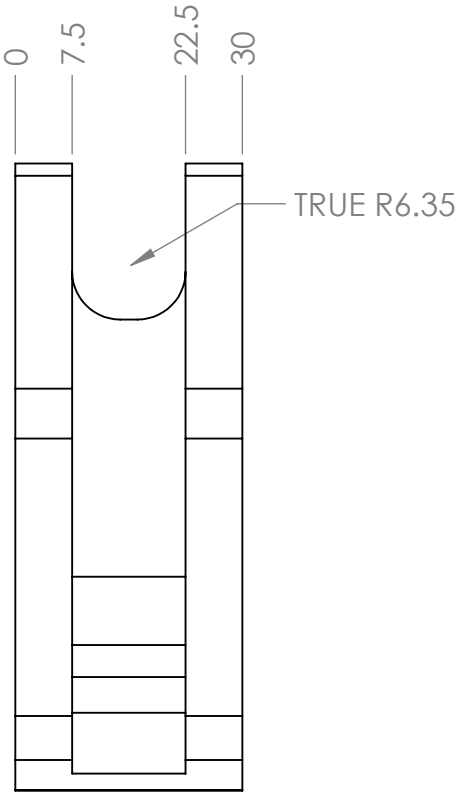

FINISH:

DEBURR AND BREAK ALL SHARP EDGES

DO NOT SCALE DRAWING
UNLESS OTHERWISE SPECIFIED
DIMENSIONS ARE IN MILLIMETERS

DIMENSION	TOLERANCE
X.X	±0.1
X.XX	±0.05
ANGLE	±0.1°

GRYPHON RACING
GUELPH, ON

TITLE:
REAR BELLCRANK

ECN:	APPROVAL	DATE	IN
DRAWN	OMM	01/18/19	
CHECKED			
CAPITAN			

MATERIAL: 6061 T6

WEIGHT: 117.254

DWG NO. GRC19_PT_SU_0079

REVISION

SCALE:1:1

SHEET 1 OF 2

A4

SOLIDWORKS Educational Product. For Instructional Use Only.