ϕ = Body roll Angle.
z = Vertical Displacement

$Z_1 = F_{z11} + F_{z12}$
$Z_2 = F_{z21} + F_{z22}$

Uses the tire as reference for coordinates.

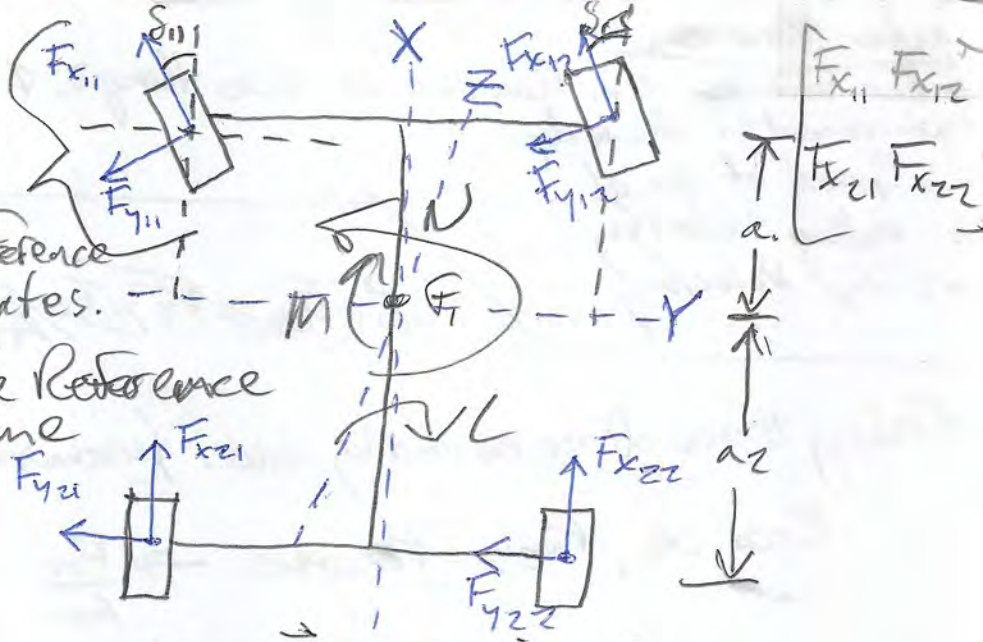

X = Longitudinal Force
Y = Lateral Force
Z = Normal Force
L = Rolling Moment
M = Pitching Moment
N = Yawing Moment

} Vehicle Reference Frame

Force Acting on a Vehicle

① Weight Force
② Aerodynamic Force
③ Road-tire friction force
④ Road tire normal force

$\vec{F}_{ij} = X_{ij}\vec{i} + Y_{ij}\vec{j}$

Remember to think of the force couple at the road tire interface

$\vec{X}_{ij} = \vec{F}_{x_{ij}}(\cos\delta_{ij}) - \vec{F}_{y_{ij}}(\sin\delta_{ij})$
$\vec{Y}_{ij} = F_{x_{ij}}(\sin\delta_{ij}) + F_{y_{ij}}(\cos\delta_{ij})$

$X_1 = X_{11} + X_{12}$
$X_2 = X_{21} + X_{22}$
$\Delta X_1 = \frac{X_{12} - X_{11}}{2}$
$\Delta X_2 = \frac{X_{22} - X_{21}}{2}$

$Y_1 = Y_{11} + Y_{12}$
$Y_2 = Y_{21} + Y_{22}$
$\Delta Y_1 = \frac{Y_{12} - Y_{11}}{2}$
$\Delta Y_2 = \frac{Y_{22} - Y_{21}}{2}$

⇒ For global vehicle behaviour, setting steering angles as equal is a good approximation.

⇒ $M_{z_{ij}}$ are also negligible for global behaviour. Only moves $\vec{T}_{ij}$ a couple centimeters.

4) $Z_1 = F_{z11} + F_{z12}$
$Z_2 = F_{z21} + F_{z22}$

$\Delta Z_1 = \frac{F_{z12} - F_{z11}}{2}$
$\Delta Z_2 = \frac{F_{z22} - F_{z21}}{2}$

F_x : Tire reference Frame.
X : Vehicle reference frame.

$X = X_1 + X_2 - X_a$
$Y = Y_1 + Y_2$
$Z = Z_1 + Z_2 - (mg - Z_{a1} - Z_{a2})$

$L = -\Delta Z_1 t_1 - \Delta Z_2 t_2 + (Y_1 + Y_2)h$
$M = -Z_1 a_1 + Z_2 a_2 - (X_1 + X_2 - X_a)h - Z_{a1} a_1 + Z_{a2} a_2$
$N = Y_1 a_1 - Y_2 a_2 + \Delta X_1 t_1 + \Delta X_2 t_2$

h Road surface to G distance.

Roll: Rotation about vehicle x-axis → y+z
Pitch: Rotation about vehicle y-axis → x+z
Yaw: Rotation about global z-axis → x+y

REFERENCE:
THE SCIENCE OF VEHICLE DYNAMICS

Camber Variation

Camber variation is a function of two things: ϕ (body roll angle) and vertical displacement of the body.

V_c: Speed of travel

V_r: Rolling velocity

V_s: Slip velocity

$\cancel{P_1 = F_1/A_1 = P_2 = F_2/A_2}$

Braking Force = (Force exerted by driver)(Mechanical Advantage of Pedal)$\left(\frac{A_{MC's}}{A_{CALIPER}}\right)$

Because, $P_{MC's} = P_{CALIPERS} \rightarrow \frac{F_{MC}}{A_{MC}} = \frac{F_{CALIPERS}}{A_{CALIPERS}}$

Camber Gain

Gain is an increase in negative camber. ♣vß→ΓÇ-%9hE▒rû╡3ù9{nç|kèt┐╧τW>eΩ6Pvì╟Yrτp.C╝α╜»zTE

Happens during:

- Cornering - A result of both caster and KPI. Turning inwards causes camber gain, outwards causes loss. ← Because KP. axis not NORMAL TO GROUND PLANE.
- Bump - A result of the 2D geometry of the A-arms in the Y-Z plane. Highly influenced by the relative lengths of the upper and lower arms.

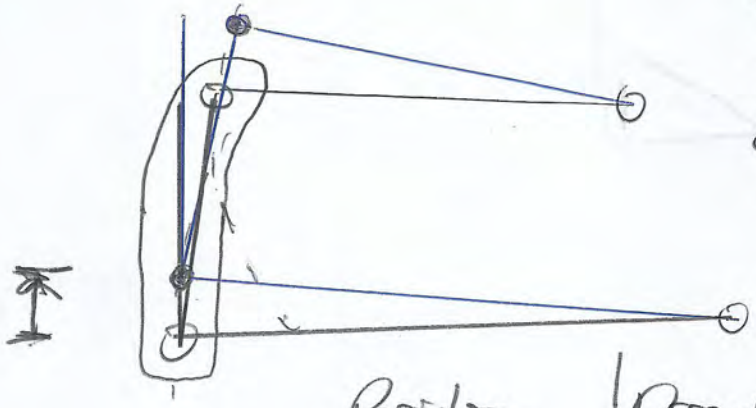

i.e. shorter upper link causes gain because the lower radius causes it to have more horizontal displacement for a given vertical displacement.

This also depends on what angle the links are at for a given position

Position	Direction	Horizontal movement
Above Horizontal	Upwards	Inwards
	Downwards	Outwards
Below Horizontal	Upwards	Outwards
	Downward	Inwards

- Roll - In a corner, body rotates about the roll center/roll axis because of inertia. This generally causes camber loss on the outside tire and gain on the inside (Assuming CG above R.C.). This is undesirable. The tires "lean away" from the turn instead of into it. Also need to think about the role that weight transfer plays - due on turn in, and lift/squat on corner exit.

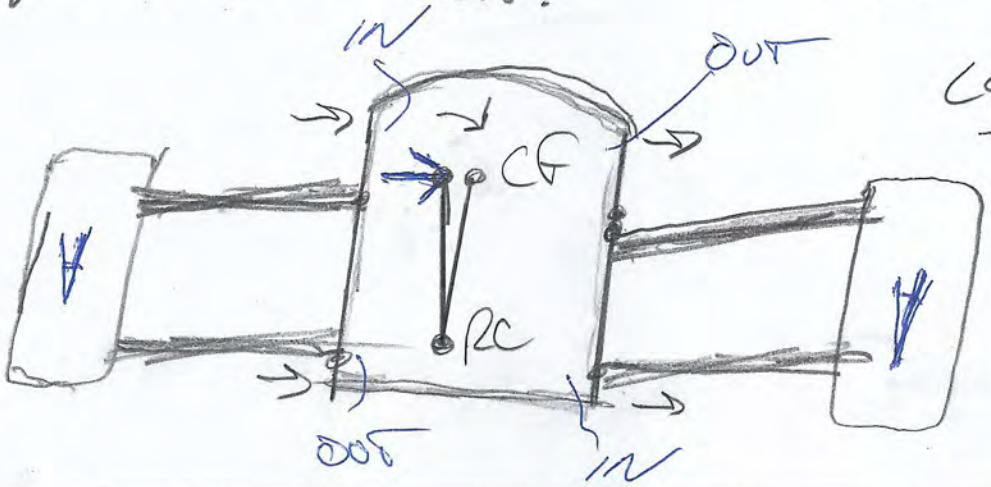

LEFT TURN

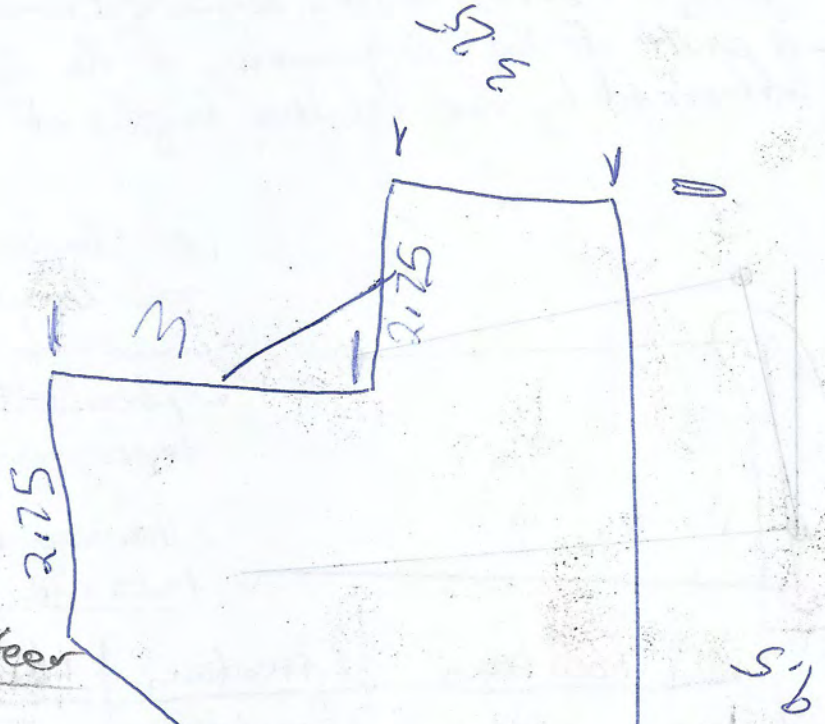

Understeer/Oversteer

In general:

Understeer - slipping to much in the front

Oversteer - slipping to much in the back

You can slop more/less by decreasing/increasing the normal force on the tire - You can have some control over this by adjusting spring rates.

Stiffer front relative to rear - More F_z in back → Less oversteer

Stiffer back relative to front - More F_z in front → Less understeer.

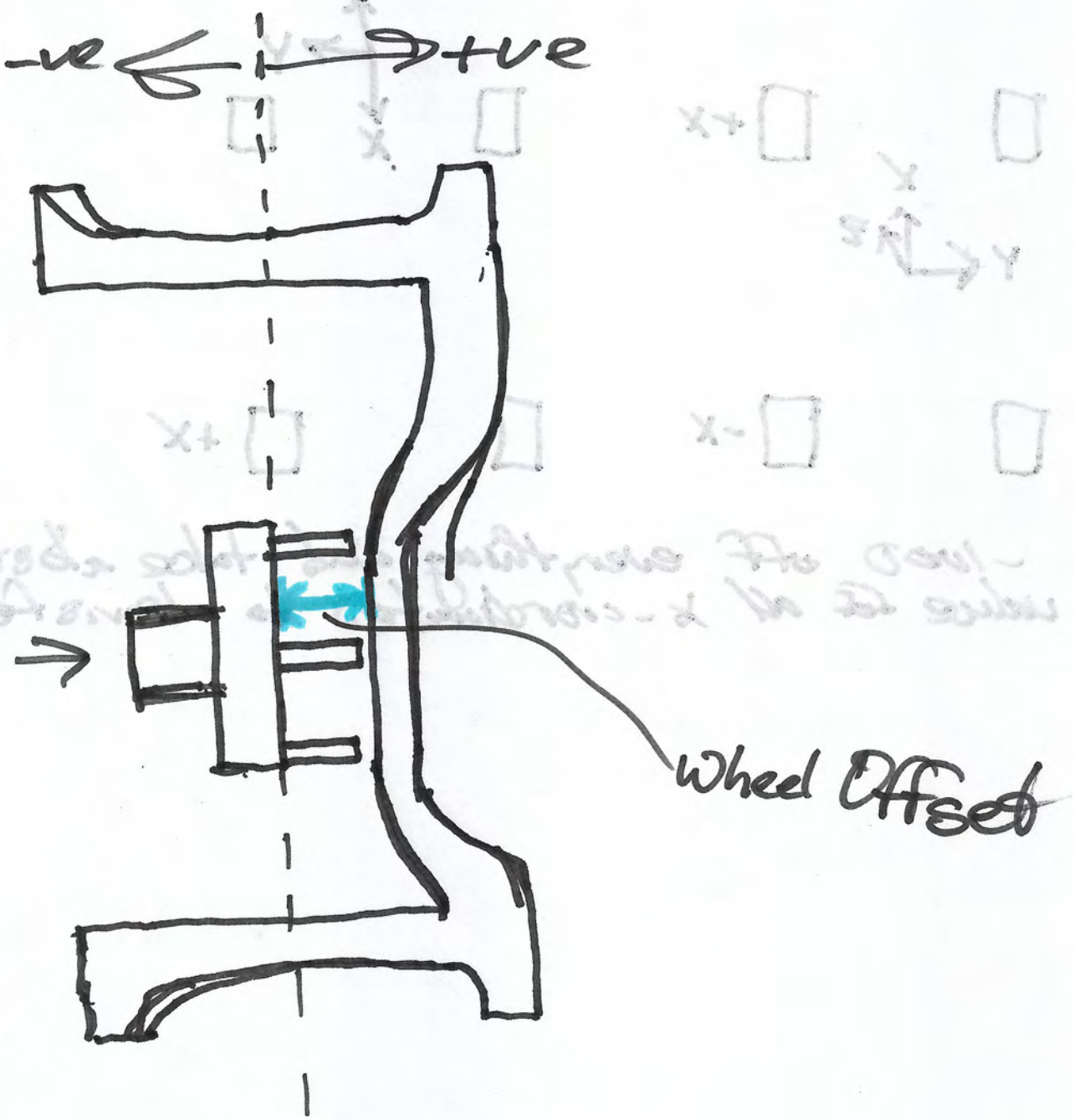

Rear Rocker Pivot Axis

	X	Y	Z
Point 1	-544.14	286.58	148.76
Point 2	-551.89	268.84	171.91

Our Axes

Lotus Axes

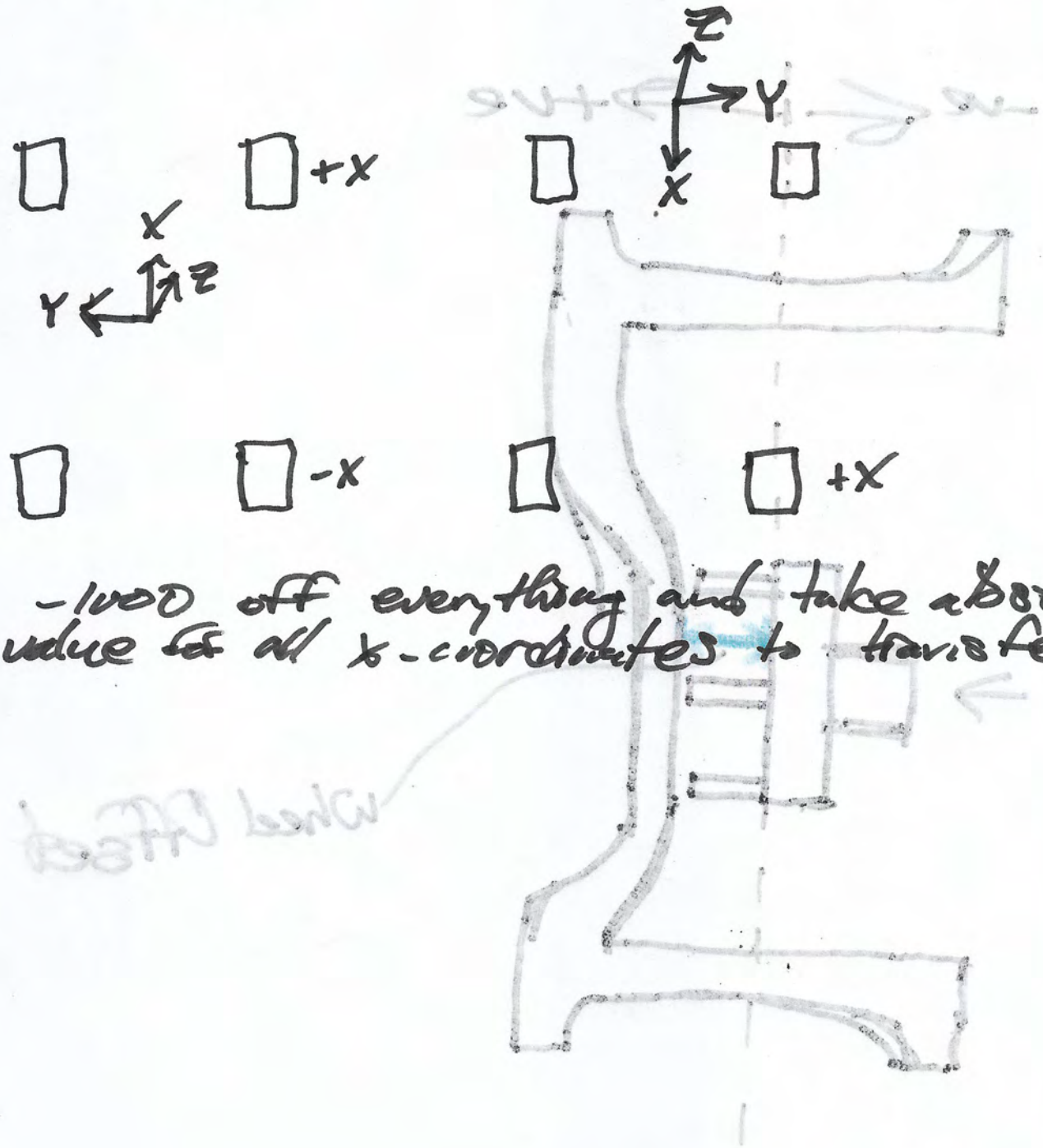

-1000 off everything and take absolute value for all x-coordinates to transfer.

Orion steering rack mount height: 22.68 mm → from top of frame tube

22.68 + 12.7 = ~~34.97~~ 35.38

Narco 14.4 Rack Travel = 73.6 mm — Steering Travel with this displacement: 35 deg. More than good enough.

Total max steer angle = 25 deg

Ackermann @ max steer = 2.4 deg

9 mm spacer on either ends of the rack will look it out at the right spot

Ackermann ✓

Bump Steer ✓ 25.3

Travel ✓ 16.0

Clearance?

Max column mount to post hoop = 50 mm

Top of hoop to q.r. center min Z-dist = 160 mm @ same angle

Wheel to edge of hoop x-dist = 130 mm

Intermediate column length = 82 mm

Total Z height from clevis to q.r. center = ~~315 mm~~ 340 mm

Current Wheel tilt = 8.5 deg

Rack Clevis - Clevis length = 365.8 mm

Min hoop x-point = 624 mm

17.7 = $\frac{455.8}{2}$ = 217.9 mm

Column Pillow Blocks: L_1 = 18.82

L_2 = 13.52

220.98

20.3418.

Dist to mount surface = 142.52 + $\frac{15.875}{2}$ = 150.45

30.29 - 25.5 = 4.79

17.79 - 2.25 = 15.54

Milliken Chapter 8 - Moment Analysis 10/28/08

$W = mg$

$C_{F_y} = \frac{ma}{mg} = \frac{a}{g}$

$\frac{F_y}{W} = C_{F_y}$ — coefficient of lateral force. Good basis for comparing a vehicles ability to generate F_y because it takes weight differences out of the eq^n.

A_y = Centrifugal Force $\quad A_y = \frac{V^2}{gR}$ — turning radius

How many g's is the car pulling?

For MMM analysis, we assume that the lateral force balances the centrifugal force:

$$C_{F_y} = A_y$$

MMM (MRA Moment Method) Diagram: Shows the variation of yaw moment M for different radius turns, from straight ahead to tighest possible at given speed.

α = Angular acceleration

$\alpha = \frac{M}{I}$ $\quad$ M = Yaw moment

I = Car moment of inertia.

This is why we want the mass in the car to be as small, as low, and as centralized in the car as possible.

How can we maximize α? Think of the 12 components that contribute to it.

Yaw moment is influenced by the relative cornering stiffnesses between the front and back.

β = Vehicle slip angle.

N = Yaw moment

C_N = Coefficient of yaw moment.

Milliken Chapter 8 - Moment Analysis 10/25/2018.

The lines of the diagram are established by 3 cases:

Case 1: Rear wheels are aligned with direction of travel. Slipping entirely on front. $\delta > 0$

Case 2: $\delta = 0$. Both front and back wheels are misaligned with the direction of travel. Slip angle equal from front to back.

Case 3: Front wheels are aligned with direction of travel. Slipping entirely on back. $\delta > 0$

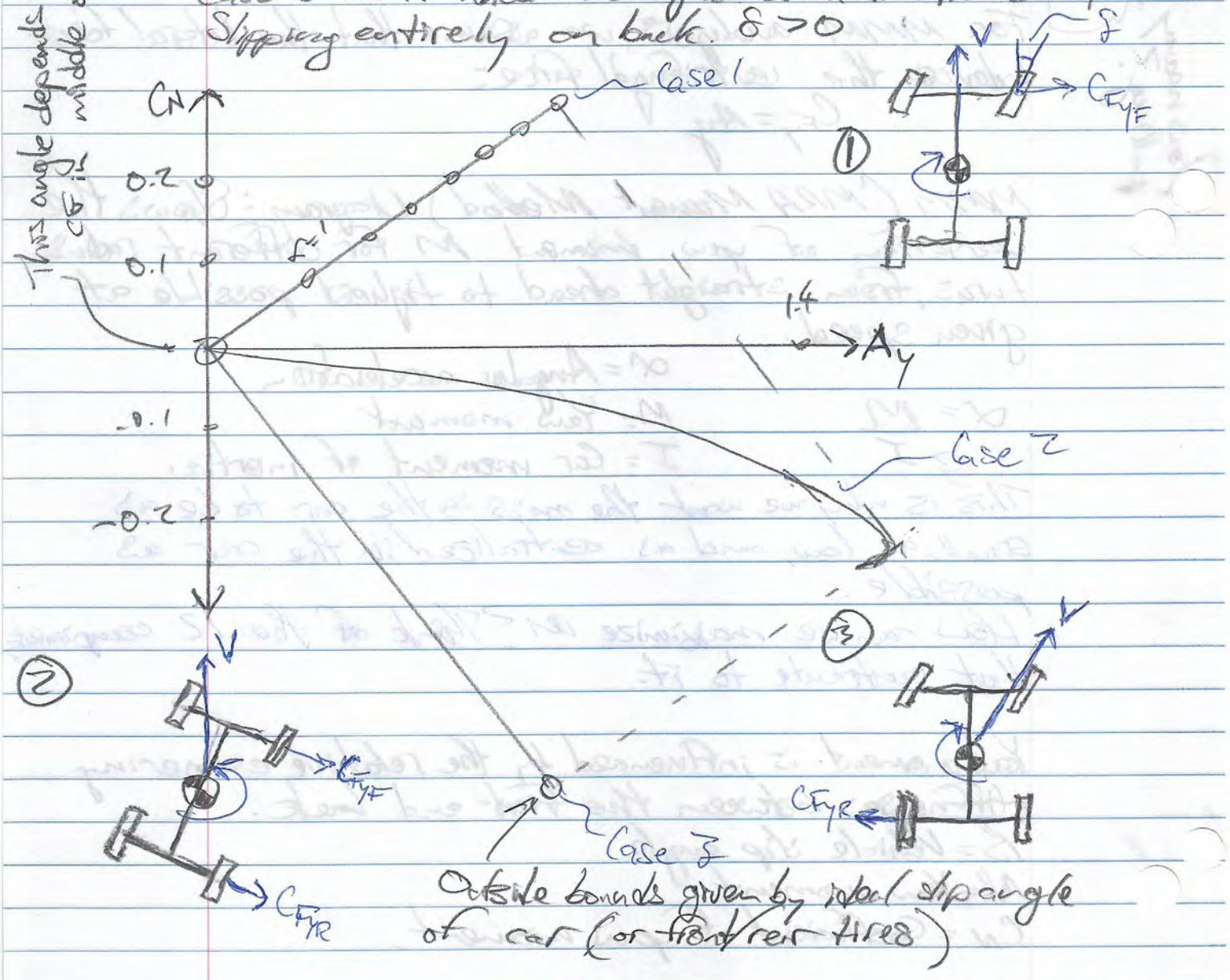

Outside bounds given by ideal slip angle of car (or front/rear tires)

Milliken Chapter 8 - Moment Analysis 10/25/2018.

The car yaws from lateral force to the degree that there is an imbalance between the front and rear forces. The reason the line for case 2 is not entirely horizontal is again due to the difference in cornering stiffness from front to rear; equal slips do not produce equal forces.

because if both slips are directed towards outside, they cancel.

Vehicle Dynamics Relationships

Camber

-ve: Good for cornering, bad for straight line

+ve: Bad entirely

A tire testing at 2.5g's on the test belt can probably only pull about 1.5 on the track. How could you find a real CF and scale your results down? Why is real world so much lower?

Under what conditions does the tire operate best? What suspension design could facilitate this?

Holding FZ constant isn't the most useful - F_Z is changing almost all the time.

Something to Look for: Sensitivity of tires to camber change.

Tire Plotting Approaches from (McCoach)

- F_Z constant - F vs. IA
- F_Z constant - F vs. TST
- F_Z constant - F vs. Pressure
- Slip constant - F vs. F_Z
- F_Z constant - M_Z vs. SA — implications: steering system, driver feedback.
- F_Z constant - M_Z vs. SE — More relevant with higher KPI?
- F_Z constant - M_X vs. SA
- SA constant - M_X vs. FZ.
- F_Y/F_Z against several parameters.

Camber Change

- Camber change during bump is dependent on suspension geometry. It is quantified by the bump camber coefficient, ε_{BC}:

$$\varepsilon_{BC} = \frac{d\gamma}{dz_s} \quad \text{units: rad/m}$$

- Like other quantities, this changes depending on position. However, if you assume it as constant and have a given bump velocity, then camber angular velocity is:

$$\frac{d\gamma}{dt} = \varepsilon_{BC}\frac{dz_s}{dt} = \varepsilon_{BC} V_s$$

pneumatic trail decreases as side slip increases

Traction Circles

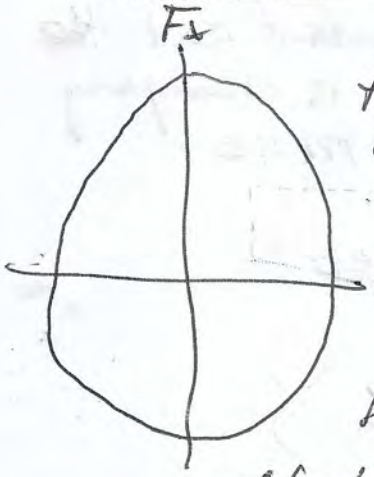

Represents the maximum tractive force of the tire at different combinations of longitudinal and lateral load

If the amount of tractive force possible under all conditions were equal, it would be perfectly circular. In reality it ~~often~~ more resembles an ellipse

How do I graph this?

- Need to know the points where grip is lost.
  i.e. find all the points of maximum grip across all situations and then plot them.
- You also need to build in some consideration for variation in other factors.

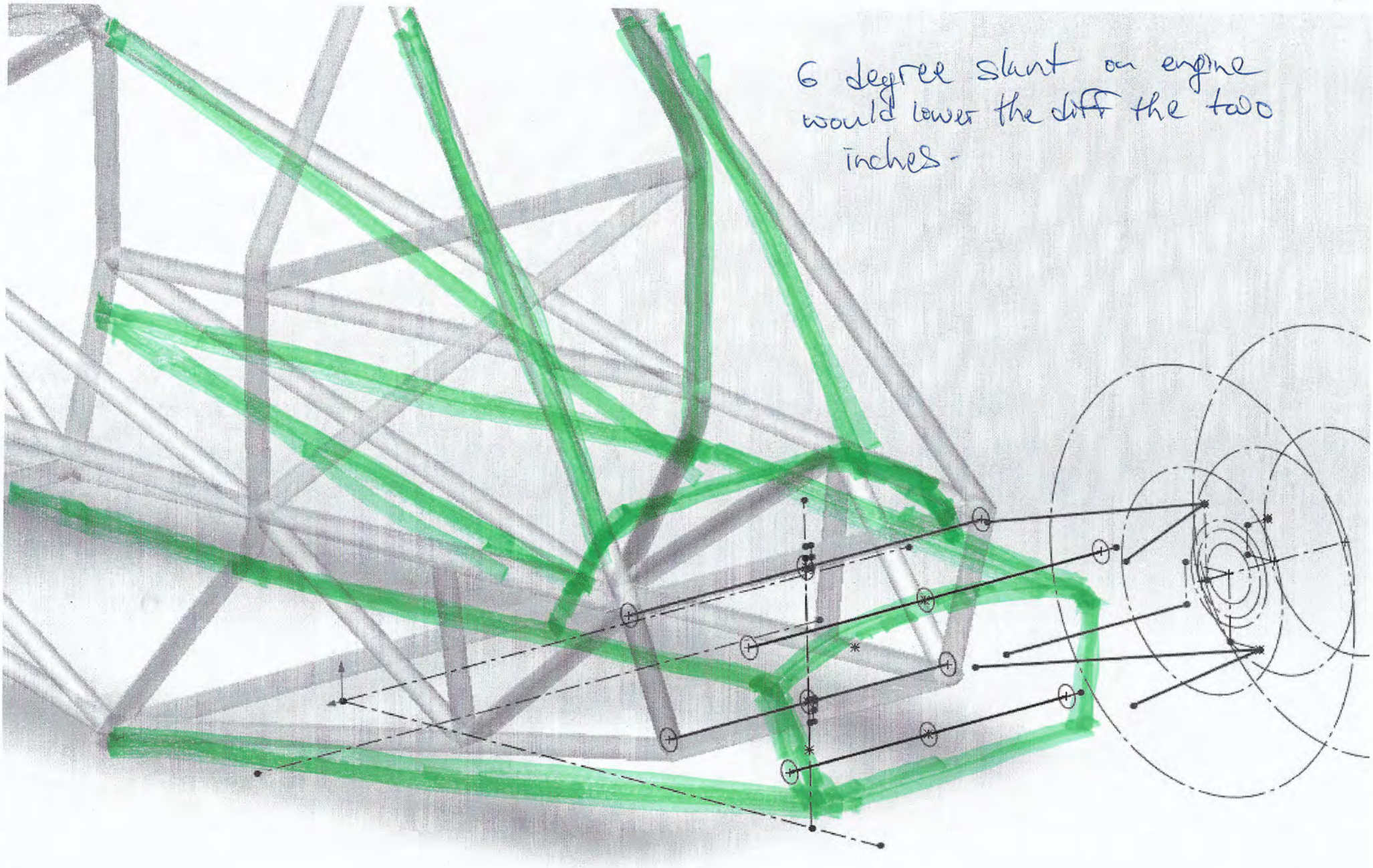

6 degree slant on engine would lower the diff the two inches.

Come up with a wet car setup.

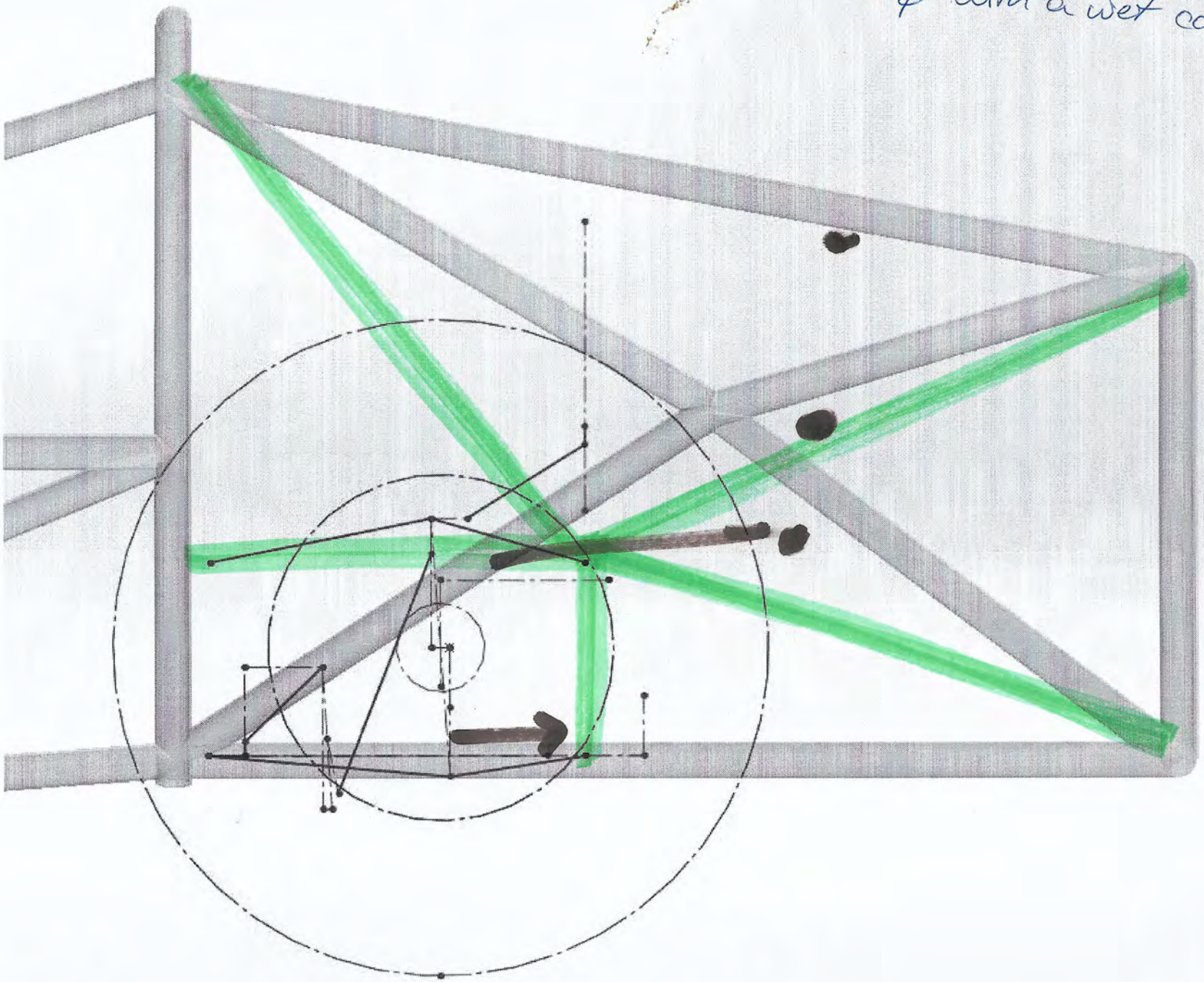

Wheelbase: 60.5" = 1540 mm

Wheel travel 2", 1" each way

Pickup Rim y-depth ≤ 1" = 25 mm

Rim Diameter = 241.3 mm

Tube Diameter = 18 mm

Lower A-Arm Length = 430 mm

Influences on Tire Temperatures (From Claude)

- Scrub due to track change
- Damper setting
- Tire pressure
- Scrub due to steering
- Longitudinal and lateral slip

SHOCK STATIC DEFLECTION: 3/8"

At 40 mm into rim, assume A-Arms have width of 60 mm

400 lbs/in

1778 N/in

70 N/mm

DESIGN FOR WEAKEST SPRINGS they have the highest deflection → multiply everything by $\frac{400}{275}$ to adjust ~~stiff~~ displacements

$$\frac{660}{70} = 9.5 \text{ mm}$$

$$\frac{1100-660}{660} = 0.60\,[0.375''] = 0.25'' \text{ of spring travel for 80\% weight transfer using our stiffest springs.}$$

$$0.25\left[\frac{400}{275}\right] = 0.36''$$

So these are the shock travels. But for upright design we need to allow for wheel travel of at least an inch in either direction.

MINIMUM PICKUP HEIGHT FROM TOP/BOTTOM OF RIM: 35 mm — CASTER ≤ 5°

Rolling Radius = 228.6 mm
Tire Width = 203.2 mm
Tire Spring Rate = 4367 N/cm = 436.2 N/mm @ 12 PSI

REAR POINTS

Upper + Lower Chassis Aft : Back ≈ 175 mm
Upper + Lower Chassis Fore : Back ≈ 140 mm
Upper Chassis Fore + Aft : Down ≈ 20 mm

710 − 175 = 535 mm
470 − 175 = 295 mm

Upright Lower + Upper : Back 30 mm
Solidworks Lower Aft :

Shock Chassis z : 280 mm	y : 15
Shock Rocker z : 315 mm	y : 265
Pushrod Rocker z : 300 mm	y : ~~265~~ 275
Rocker Pivot z : 255 mm	y : 265
Pushrod Upright z : 95 mm	y : 538

Wheel Center x : −228 + 1200 = 472 mm
Spindle x : 228 − 35 = 693 → −693 + 1200 = 437 mm

Inboard to Outboard CV x : 47 mm
Minimum Upper → Lower z Dist : 145 mm

* Start lower points to be at slight negative angle for ride height or zero. This will lower track variation.

Upper A-arm angles: Somewhere around 3-4 degrees?

Current Upright z-dist : 180
For 5° +ve caster, put lower point ≈ 15 mm forward

WHAT ADJUSTABILITY CAN WE BUILD IN?

- Shock preload
- Damper values
- Spring rates

> Shocks

$\sin^{-1}\left[\frac{10}{280}\right] = 2.05°$ Top Angle

A-Arms

- Tire pressure
- Anti Roll bar rates
- Toe
- Camber

$\Delta y_{OUTBOARD} \leq 155mm$

$\Delta y_{INBOARD} \geq 140mm$

$\sin^{-1}\left[\frac{15}{260}\right] = 3.30°$ Top Angle

If we were trying to figure out how to set each of these, what would we want to look for?

Offset Considerations

Upright Bore
32
47
57

- Scrub radius
- Upright pickups (Clearances)
- A-Arm length ← Negligible
- Rim manufacturing (Symmetric?)
- Upright assy. stress due to M_x
- M_{xx} contribution ← Negligible

MOST IMPORTANT

New Upright

Top-Center: 91mm
Bottom-Center: 88mm

$165/2 = 82.5mm$

→ Make the top length be longer than bottom to maintain Jake's layout.

Top Depth = 1.4"
Bottom Depth = 2.6"

FROM Top-Bottom = dist = 160mm

→ 80
→ 80

Bring bottom A-Arm pickup forward and upwards. Reduce the material in the corner as well.

A-Arm-Upright: Up 15 relative to spindle.

New Bottom-Center: 73mm
New Top-Center = 82mm
New Top Depth = 0.25" = 6.35mm
New Bottom Depth = 1.5" = 38.1mm

~~Meeting~~

- ~~Hard points~~
- ~~Projects~~
- ~~Slack~~

CG Calcs

Wheelbase = 60.~~8~~"

Weight = 609 lbs

30mm = 1.2"

Front dist = 0.478

26.58" + 1.2 = 28"

A-Arm	L_{1x} = 465.2mm
Pullrod	L_{2x} = 321.6
Bellcrank	L_{3x} = 65.26
Shock	L_{x4} = 136.3

~~4" 0.168~~

165mm sin(4°) = 11.50 mm

11.50/2 = 5.75

Pickup dimensions to the spindle center are not exactly equal but close.

Set spindle location to halfway between the upper and lower pickup

Bellcrank ~~to~~ plane to Front plane

11.9°

sin(11.9) = 0.206

Suspension Tabs

- Shock Mounts (F+R) — 11 Ga.
- Bellcrank Mounts (F+R) — 11 Ga. — 0.049 Rolend link OD = 13.35
- ARB Mounts (F+R) — 16 Ga.
- Steering Mounts (Rack) — 16 Ga.
- Steering Column Box — 16 Ga

Aluminum Blocks

Part	Height Needed	Qty.
Rear Upright	2" ~~or better~~	2
Shock Dyno Base	3" ~~or better~~	1
Wheel Mold Section 1	3.5"	1
Wheel Mold Section 2	2.5"	1
Wheel Mold Section 3	2.25"	1
Bellcranks (F+R)	1.5"	4

Cut List

1 @	2.25"	(Uprights)	~~2.5~~ 2.5
1 @	3.25"	(Shock Dyno)	3.25
1 @	~~3.75~~	(Wheel Sec. 1)	3.0
1 @	2.75	(Wheel Sec. 2 + Bellcranks)	
1 @	~~2.5~~	(Wheel Sec. 3 + Extra)	

Suspension Parts

Done, Ready to Manufacture, CAD Done, CAD in Progress, Design in Progress, Not Started

Done

- Tires
- Rims
- Bellcrank Bushings
- Steering Column Bushings
- Springs for Ohlins
- Steering Column U-Joints
- Wheel Studs + Lugs

Ready to Manufacture

- Steering Column
- Steering Rack Parts

CAD Done

- Front Bellcranks
- Rear Bellcranks
- A-Arm Mount Blocks
- Rear Upright
- Front ARB
- Rear ARB

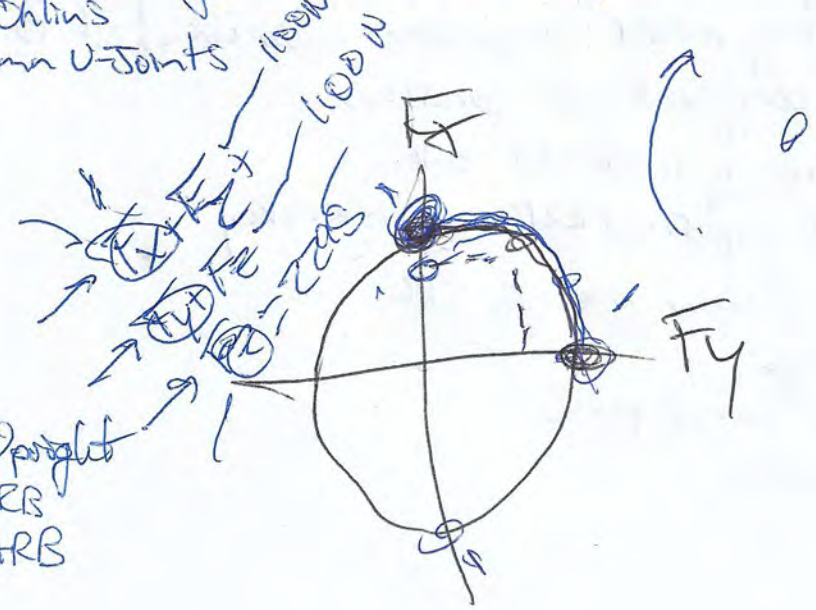

CAD in Progress

- Front Upright
- Front Hubs
- Rear Hubs
- Shock Cover
- A-Arms / Suspension Links

Design in Progress

-

Not Started

- ARB Bushings
- S/S tubing (A-Arms, Steering Column, ARB)
- Spherical bearings + Snap Rings (A-Arms)
- Front + Rear Upright bearings
- Fasteners
- Hub Material

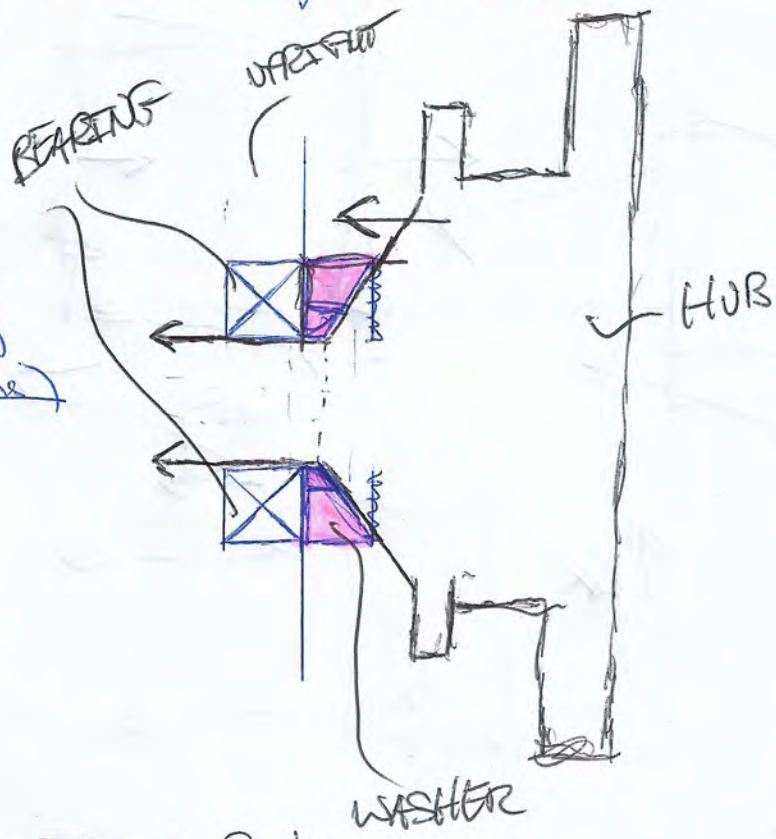

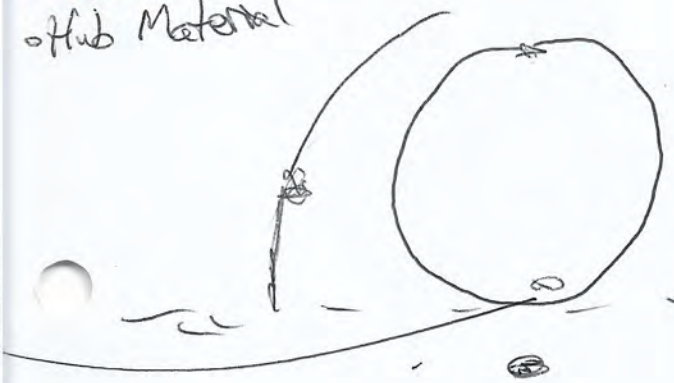

Amish People

- Bearing Cups
- Rod ends / tube ends
- Bobbins

~~Jan 14 Meeting~~

- ~~Hub spindle clearances?~~ ~~9. lunch?~~

Jan 16 Meeting

- Design finished after last front upright revision
- Building master suspension assemblies with finalized parts
- Hubs being sent out tomorrow
- A-Arm jig machined today
- Metal Supermarkets on Monday
- ARB + Column mounts CNC
- Drawings
- Lathe small parts
- Dynamics

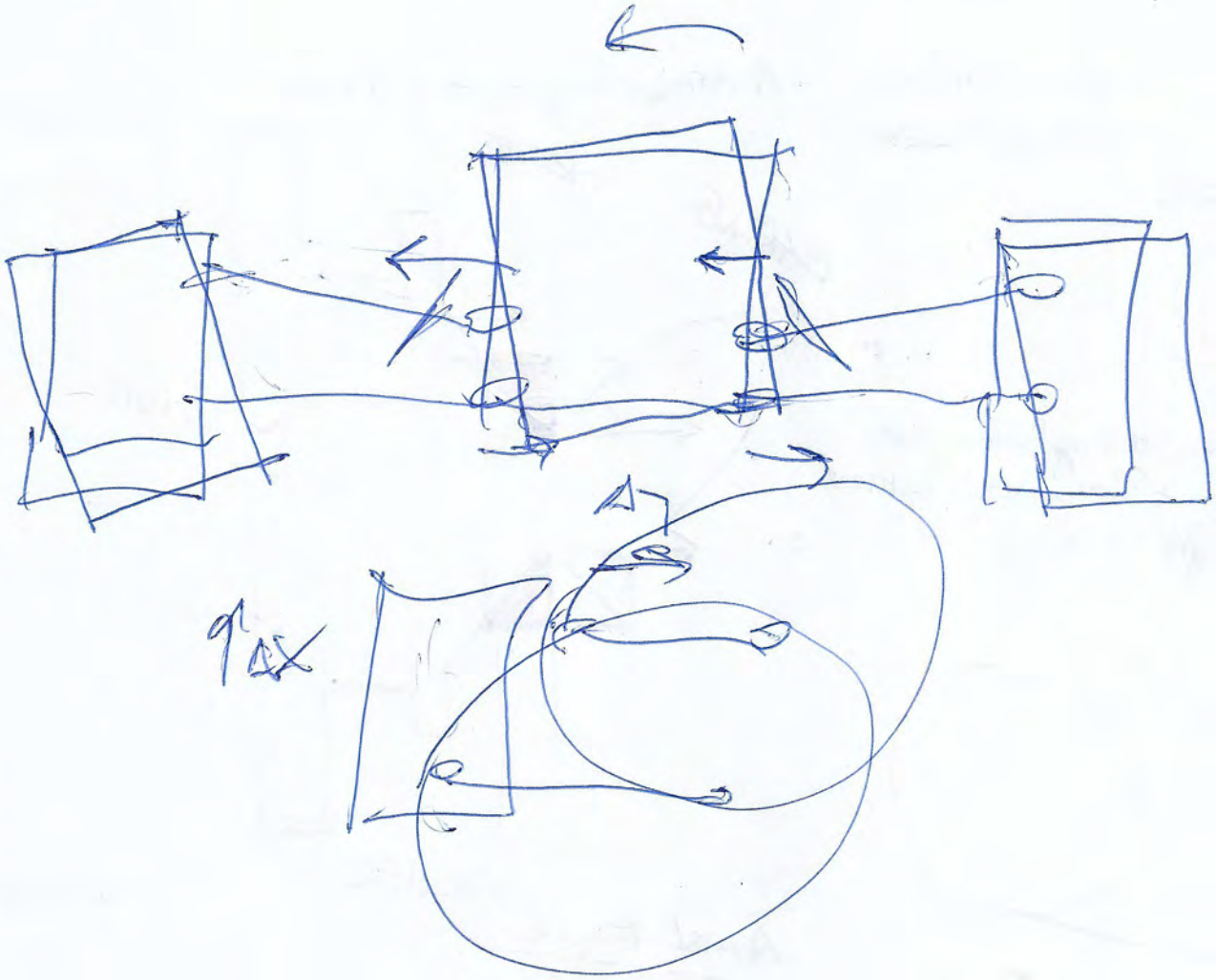

Suspension Parts

Done, Ready to Manufacture, CAD Done, CAD in Progress, Design in Progress, Not Started

Done

- Tires
- Rims
- Bellcrank Bushings
- Steering Column Bushings
- Springs for Chains
- Steering Column U-Joints
- Wheel Studs + Lugs

Ready to Manufacture

- Steering Column
- Steering Rack Parts

CAD Done

- Front Bellcranks
- Rear Bellcranks
- A-Arm Mount Blocks
- Rear Upright
- Front ARB
- Rear ARB

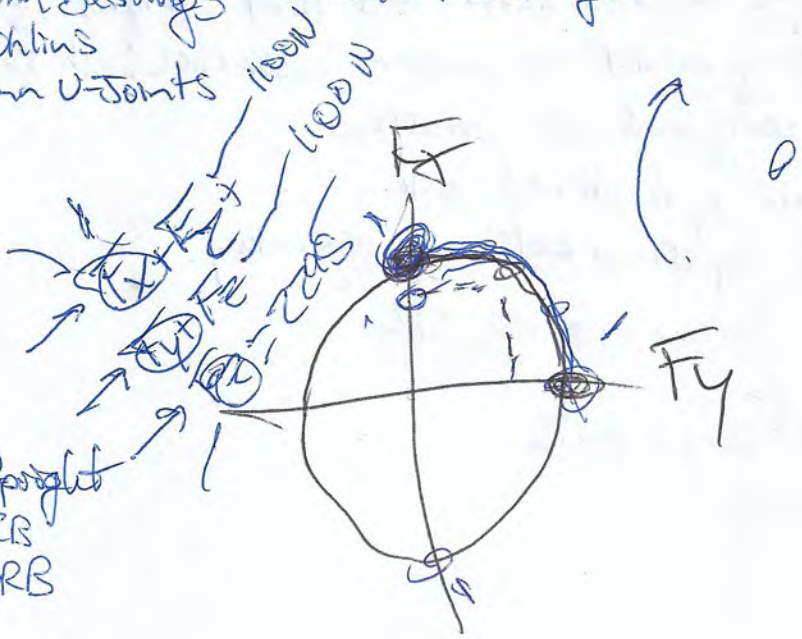

CAD in Progress

- Front Upright
- Front Hub
- Rear Hub
- Shock Cover
- A-Arms / Suspension Links

Design in Progress

-

Not Started

- ARB Bushings
- S/S tubing (A-Arms, Steering Column, ARB)
- Spherical bearings + Snap Rings (A-Arms)
- Front + Rear Upright bearings
- Fasteners
- Hub Material

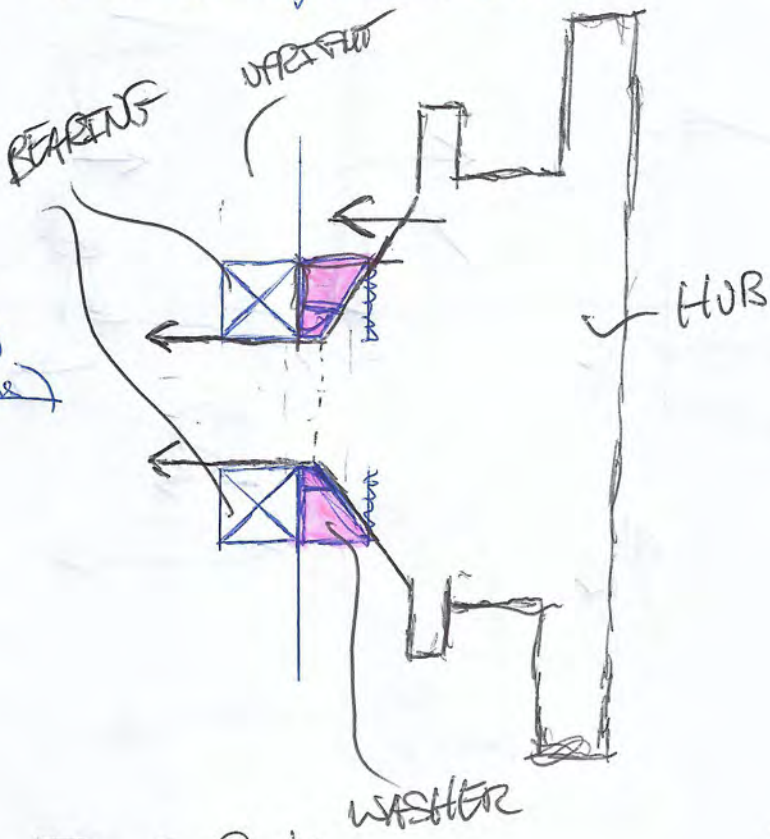

Amish People

- Bearing Cups
- Rod ends / tube ends
- Bobbins

Mount surface to LRJ = 63.5mm

Caliper Center to Outside = 32.75mm

Caliper Center to Inside =

$D_1 = 7.62$ mm

$D_2 = 4.45$ mm

$D = 6.035$ mm — spring pin spacing

$10 + 35.75 + 5 = 50.75$ mm

Rock Tilt = 20.3418 deg.

Joint Angles = 32 deg

Upper Block Distances: 5, 30 mm

Steering

Lower length = 368

Shaft length = 368 − 15.93 − 42.96 − 4.7 =

Middle Length = 81

Shaft Length = 81 − 2(15.93) = 49.14

Upper Length = 142.07

Shaft Length = 126.14 − 33.21 =

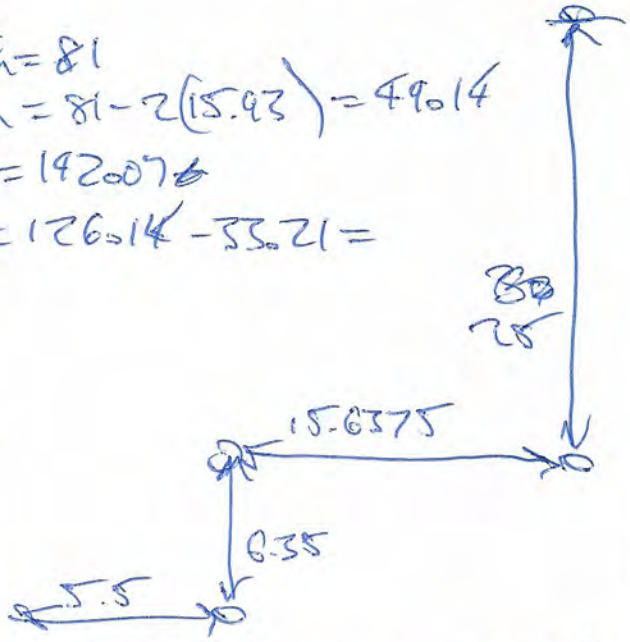

Bearing Block ID = 15.875mm − 25.4(0.0005)
= 15.862

ARB Block ID = 17.00mm − 25.4(0.0005)
= 16.987

To Do

- Fix Rear Geometry
- Find ARB points front + rear with mounting
- Final Steering CAD
- Update ADAMS Model
- ARB + Column mount CAM
- A-Arm CAM
- Finalize A-Arms
- Update Excel Points
- Shock cover design
- Shock cover CAM
- Order - Esset Parts
- Order - Summit Racing
- Order - Igus Bearings
- Order - Metal Supermarkets
- Order - Fastenal
- Rear Bellcranks
- Front Bellcranks
- Rear Hubs
- Rear Hubs
- Front Hubs

Rear Lower	Angle = 38.87016 L_1 = 355.6344 L_2 = 341.9231
Rear Upper	Angle = 54.56.76 L_1 = 282.0755 L_2 = 290.5017
Front Lower	Angle = 44.0546 L_1 = 357.8638 L_2 = 349.0200
Front Upper	Angle = 49.4694 L_1 = 242.0867 L_2 = 286.7059

A-Arm Distances off Frame

MOUNT ~~BLOCK~~ 3/4" BOX MOUNT BLOCK

Furthest point "protruding out" on frame + 19.05 mm + 3.175 + 19.00 = 41.225 mm

1/8" Shim

→ Bring Rear Upper Aft in: 41.225 − 11.7 = 29.525

Match the fore with the y coordinate to keep in line

→ Bring Rear Lower Aft in: 41.225 − 9.91 = 31.315

Match the fore with that y-coordinate

→ Bring Outboard points out by 12.7 mm

Wheel Clearance – ~~Top~~ Rear Upper in Droop:

Length = 220 ΔZ @ ~~[illegible]~~ = ~~[illegible]~~

ΔZ = 25.4

$\sin^{-1}\left[\frac{25.4}{220}\right] = 6.63°$

Movement of A-Arm Towards Rim = 18 mm sin(6.63) = 2.1 mm

∴ Not an issue

Wheel Center

Hub Mount Thickness = 0.35 ~~mm~~ "

Shock Cover

Hyperco Spring OD = 2.3" — 29.21 mm

The shock will tilt downwards away from the cover in both compression and rebound. But we should still allow extra room for the shock to bulge some in compression.

Shock is CAD'ed with r = 25 mm

So with a 35 mm = r from the center of the shock leaves 5.7 mm for the shock to bulge, and you seem to have plenty of room, be generous.

Plane Distances: −40
0
30
50
90
104
120
140
168

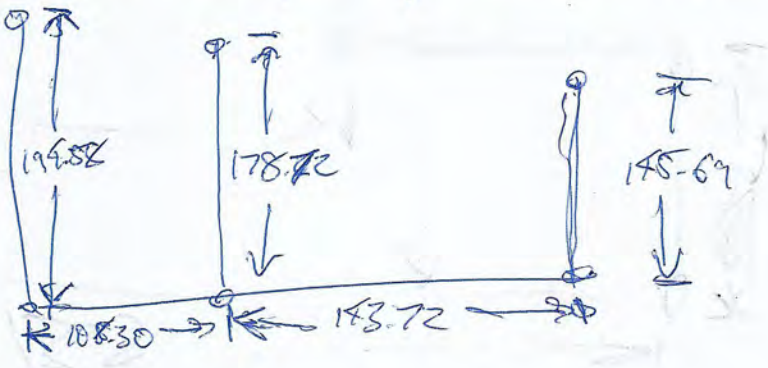

Stud Length

Hub thickness = 10mm ~ threads begin at 12mm 3.1" or 79mm Bolt head = 5mm

Wheel Center thickness = 8.9 mm

Nut ≈ 21 mm

Total = ~~39.9mm~~ 42mm, 1.65"

Overall length = 50 mm or greater, 2"

Thread Diameter = 0.48"

A-Arm Jig

- Include the toe link bolt hole on the upper rear arm as well
- Check with Barry: • T-Slot Spacing
  • Width of table
  • Bolt size

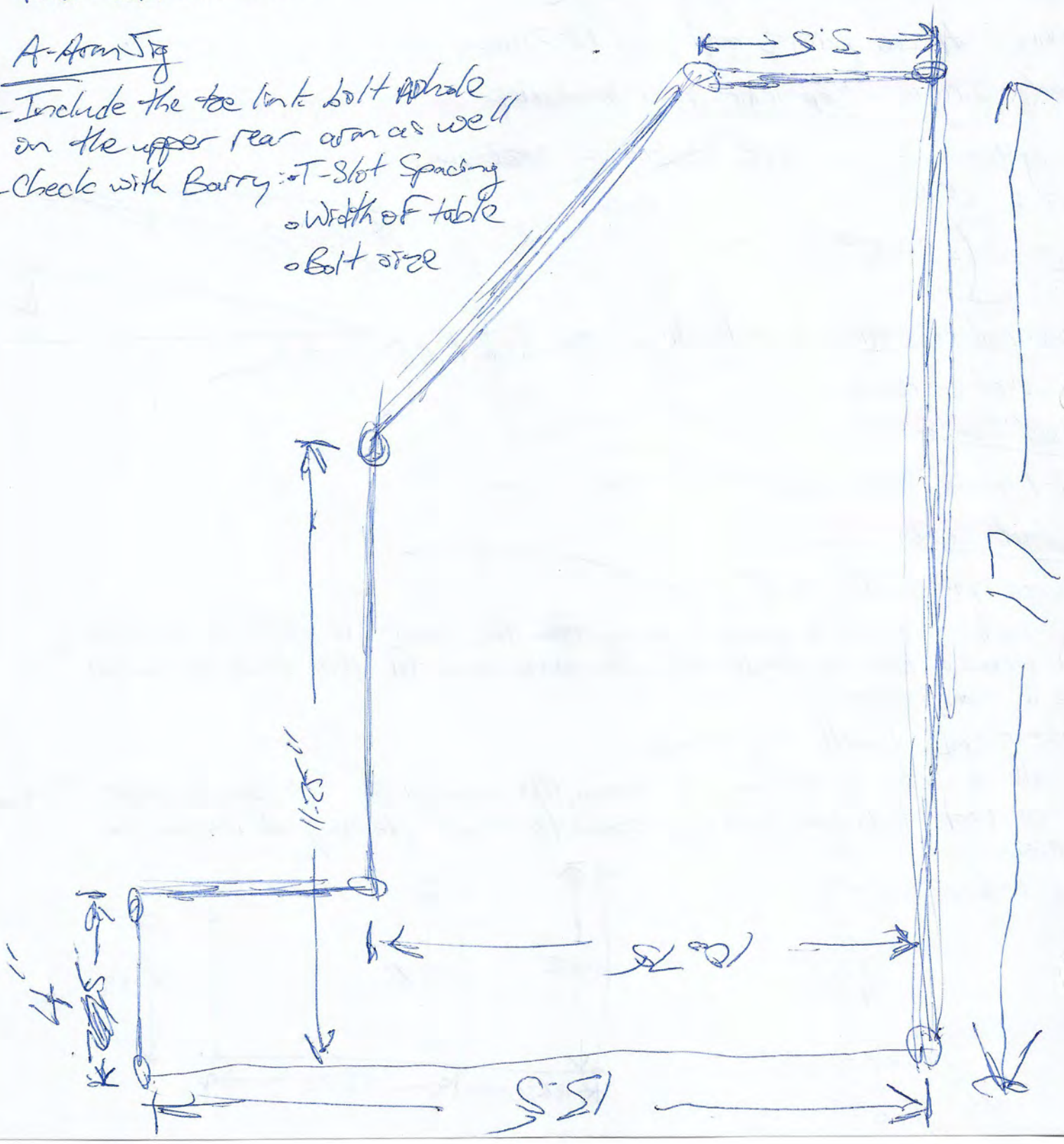

Roll Gradient $= \frac{\phi_1}{A_y} = \frac{-W\,H}{K_{\phi F}+K_{\phi R}} = \frac{(267\,kg)(0.260-0.060\,m)(9.8)}{K_{\phi F}+K_{\phi R}}$

$\rightarrow 0.8 = \cancel{\frac{534}{K_{\phi F}+K_{\phi R}}}$ $\cancel{\frac{2670.5}{K_{\phi F}+K_{\phi R}}}$ $\frac{523.52}{K_{\phi F}+K_{\phi R}}$

$\rightarrow 654.15 = K_{\phi F}+K_{\phi R}$

Total Roll stiffness

$m = 267\,kg/4 = 66.75\,kg$

$f = \frac{1}{2\pi}\sqrt{\frac{61000}{66.75}} = 4.81$

$C_c = 2\sqrt{km}$ $\xi = \frac{c}{C_c}$ $\frac{2560}{8071}$

$C_c = 2\sqrt{(61000)(66.75)}$

$C_c = 8071\ \frac{Ns}{m} / \frac{kg}{s}$

$c = \frac{F}{v} = \frac{320}{0.125} = 2560$

For damper graphs, compression is positive

c_{tn} (REBOUND) $= \frac{250}{0.125} = 2000$

Steering wheel

120 deg / 257 deg wheels

Stability, maximize the traction capacity

3.5 in/rev

will provide

1/4 Car Model

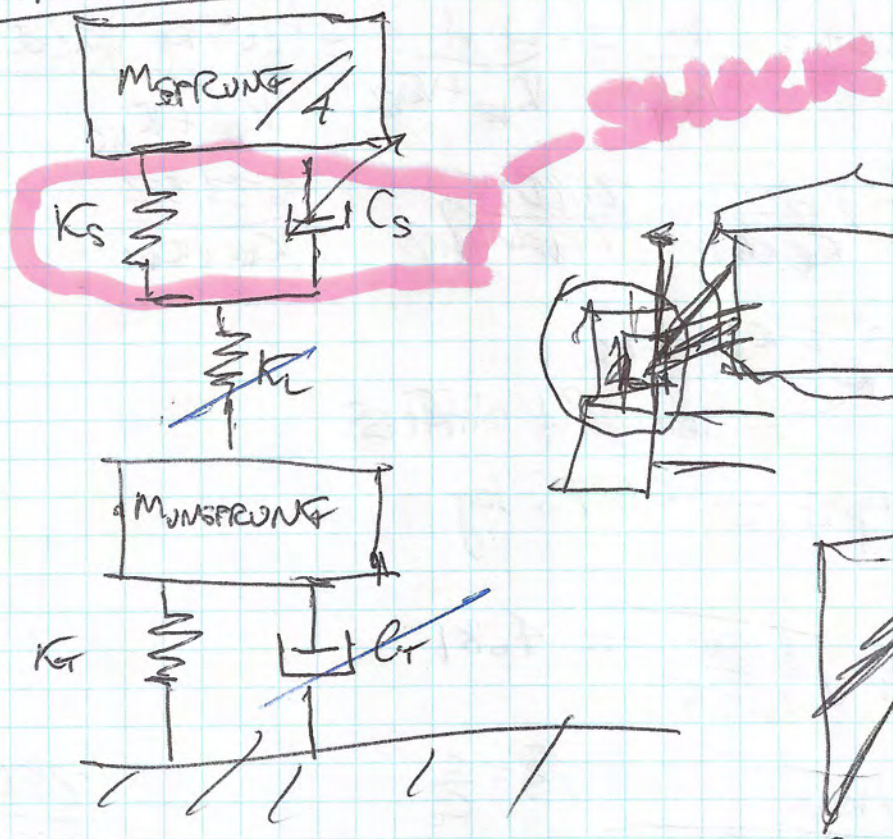

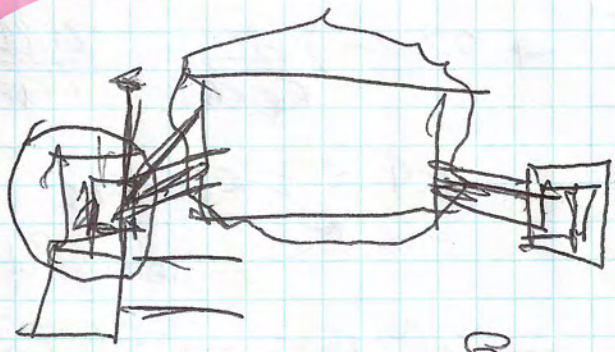

$\cancel{K_T \gg K_S}$

$C_T \gg C_S$

ω_n

$\omega = \omega_n$

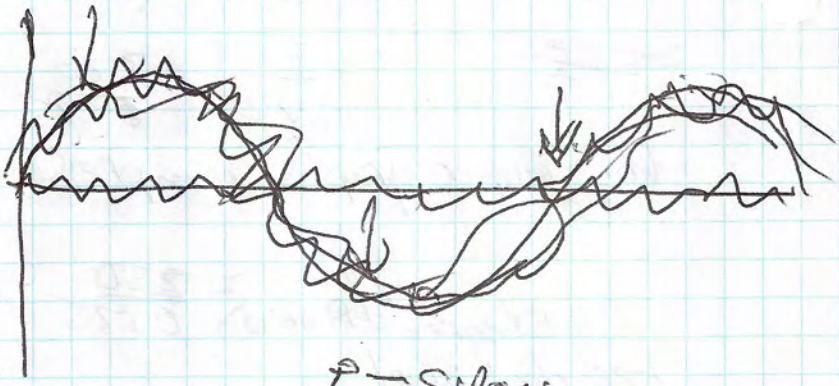

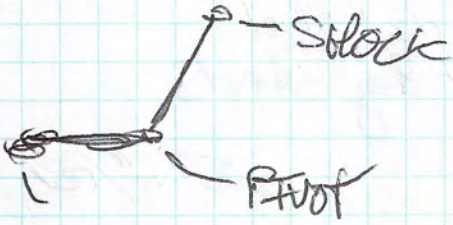

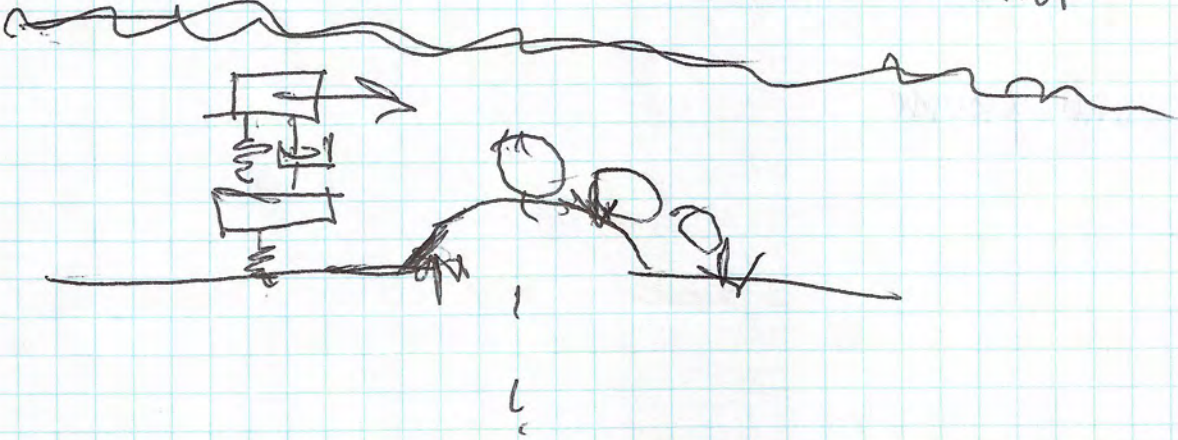

$T = r \times F$

$= F \cdot d$

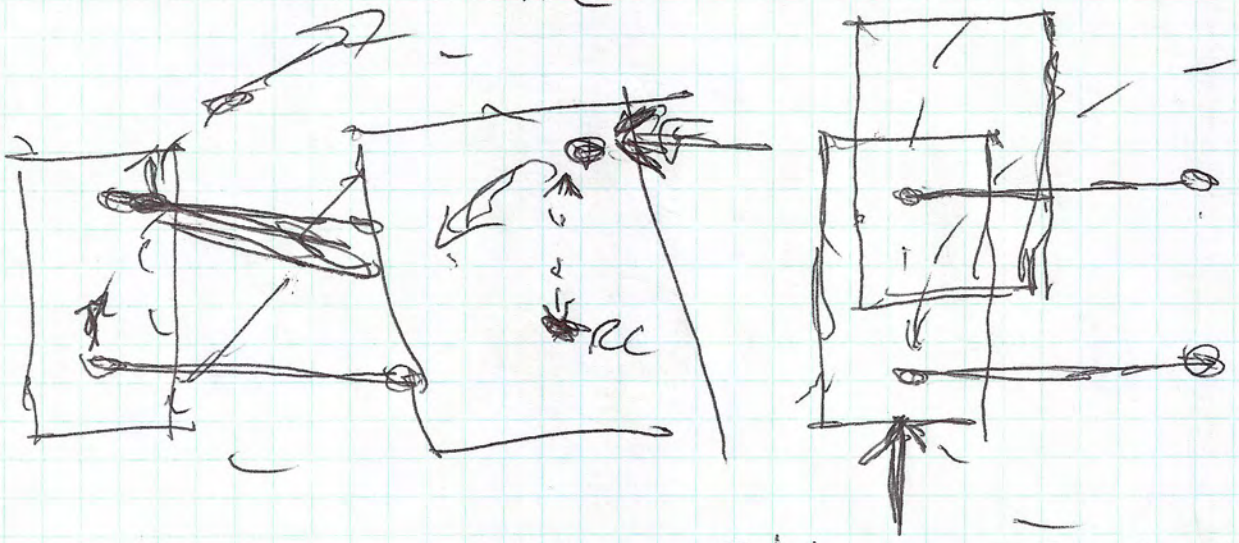

Rotation	Translation
X: Roll	~~Surge~~
Y: Pitch	~~Sway~~
Z: Yaw	Heave

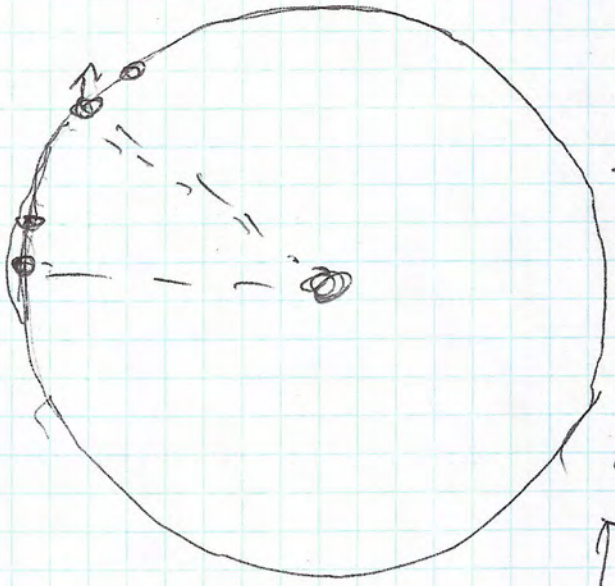

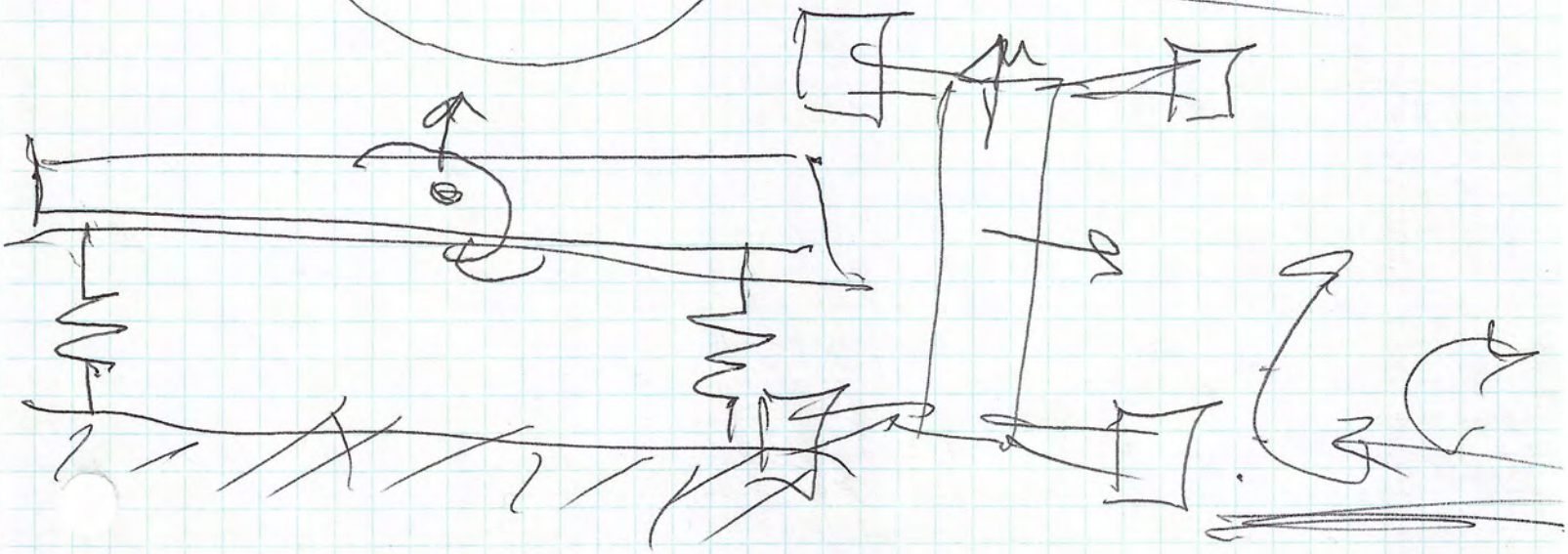

CARPENTERS TURN

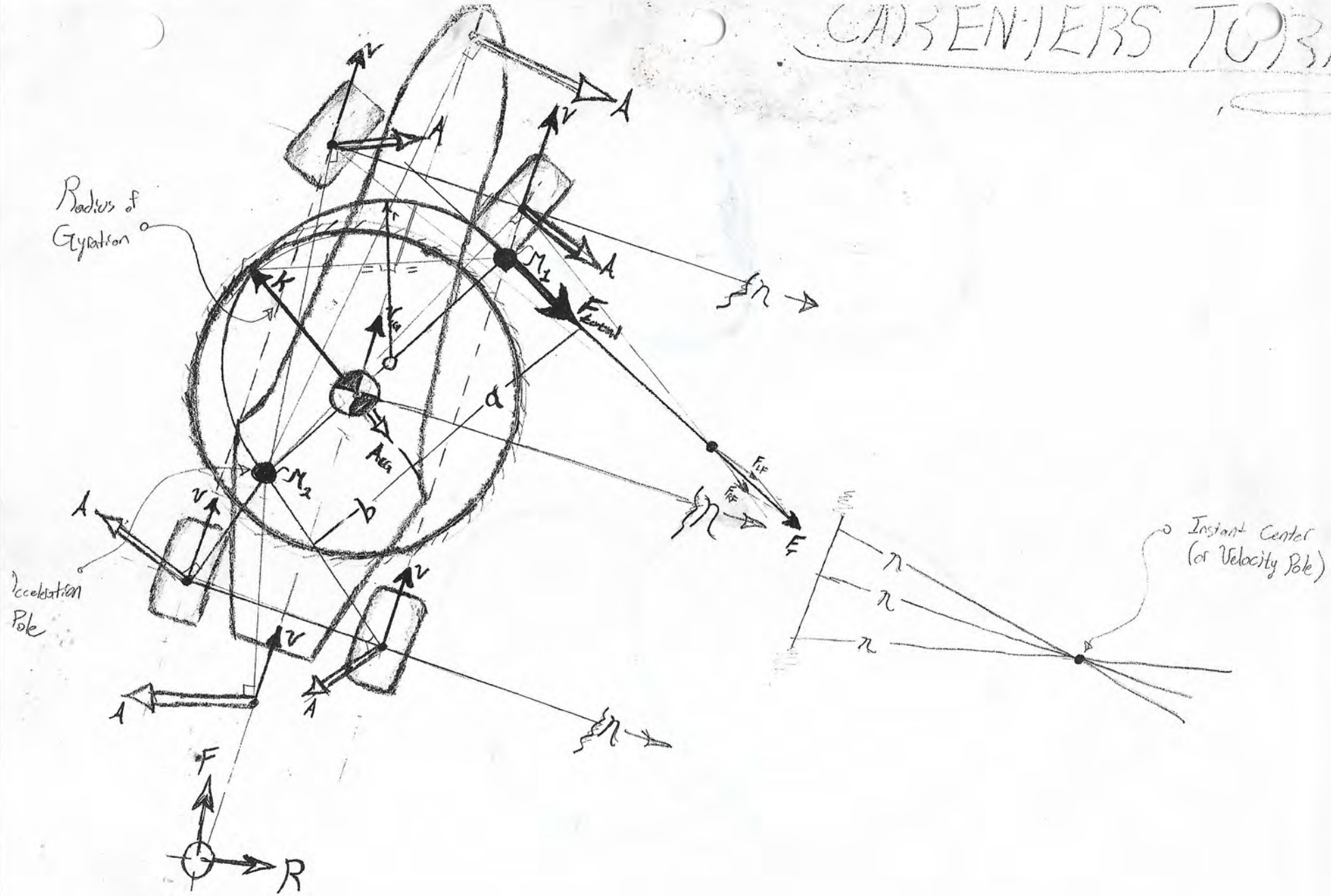

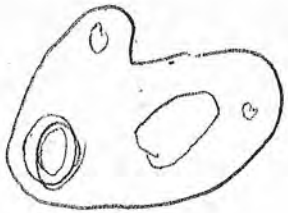

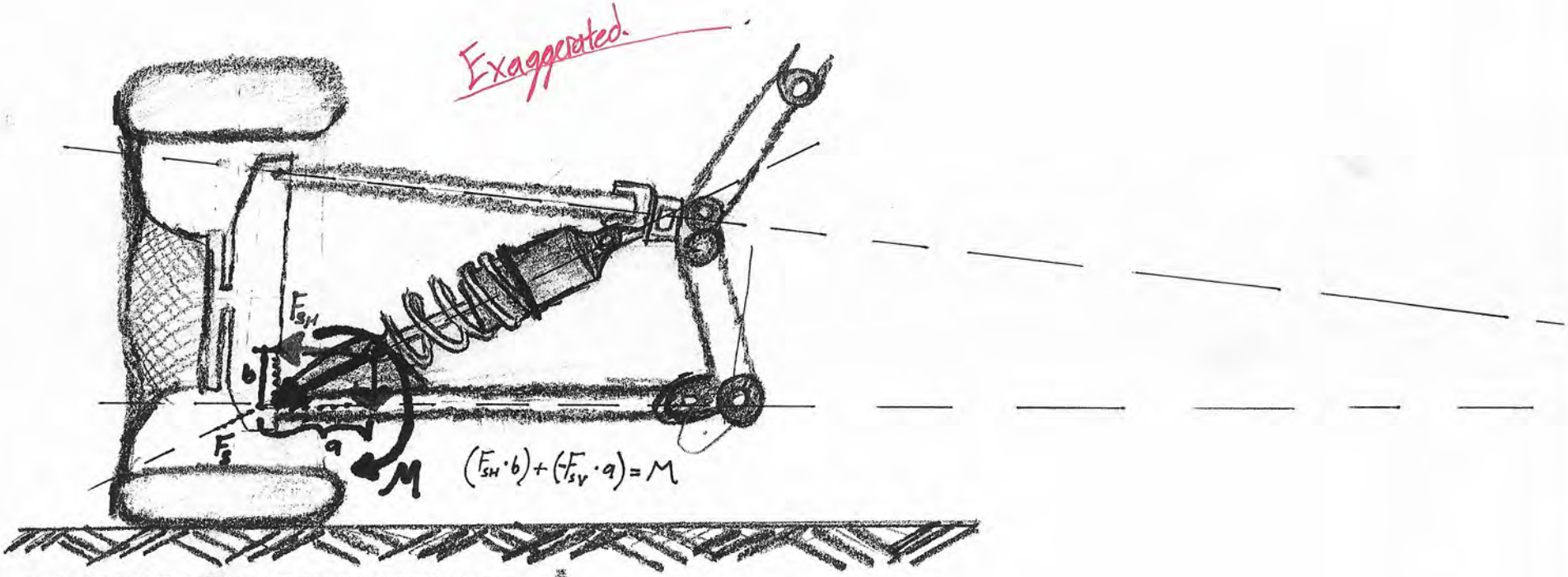

DASD Concept.

• Steeper the n-line, Larger the Jacking Force

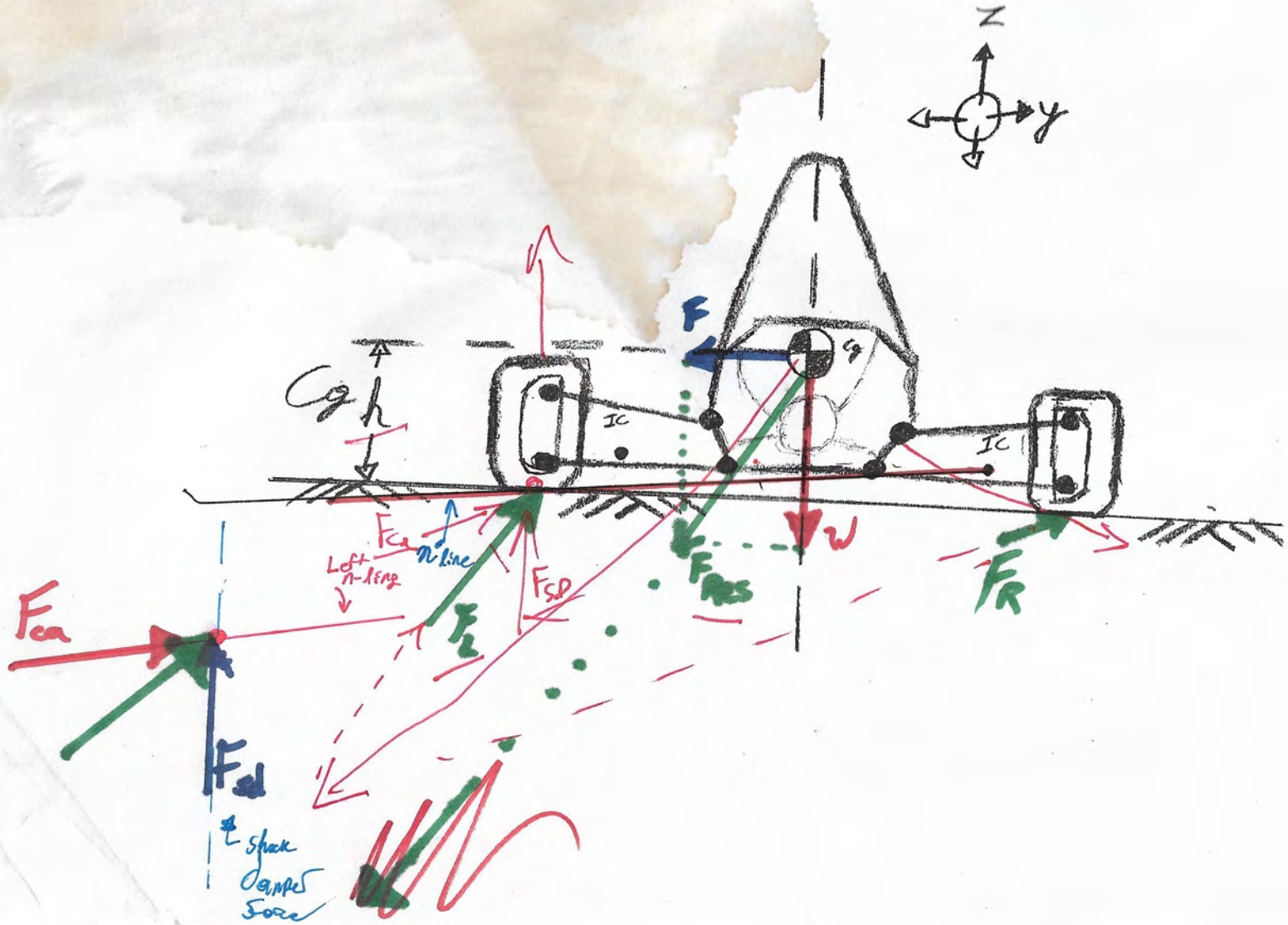

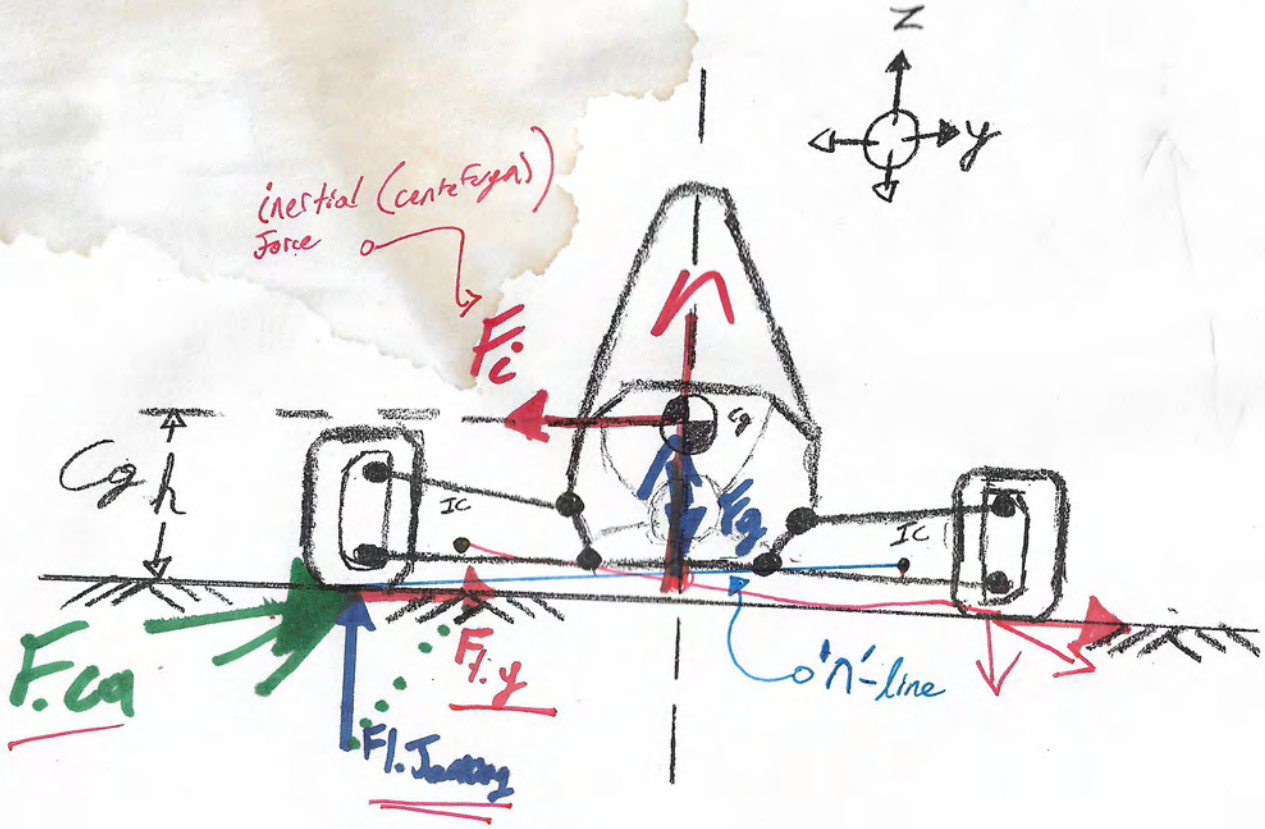
z
y
inestial (centrefugal) Force
Fc
n
cg
h
IC
IC
Fg
F.ca
F.y
Fl.Jacking
'n'-line

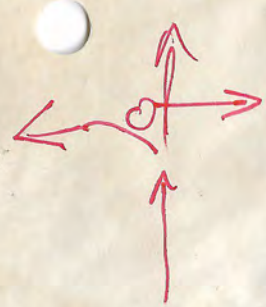

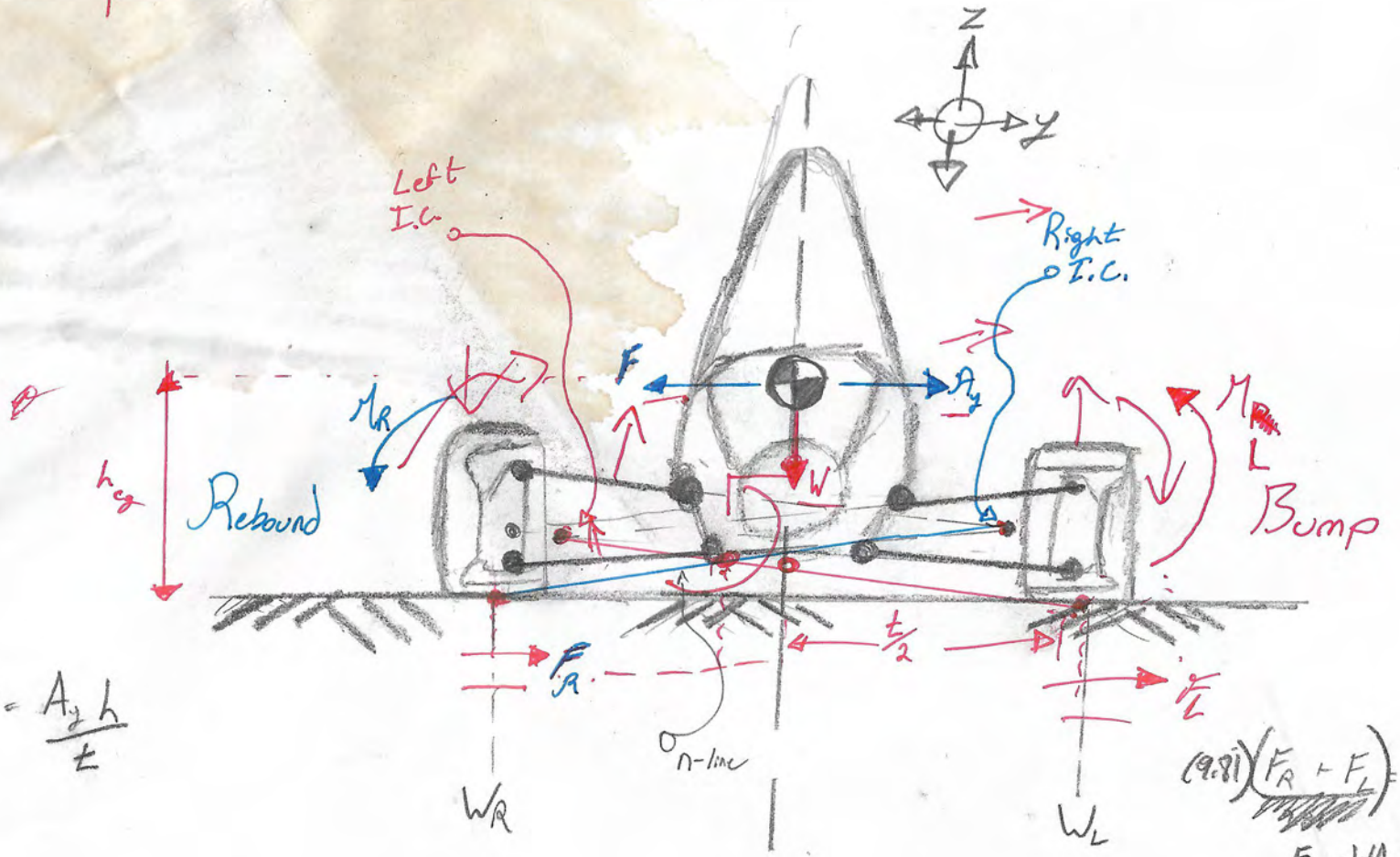

$$\Delta t = \frac{A_y h}{t}$$

$$(9.81)(F_R + F_L) = A_y$$ • Lateral Accel

$$F = -WA_y$$ • Centrifugal Force

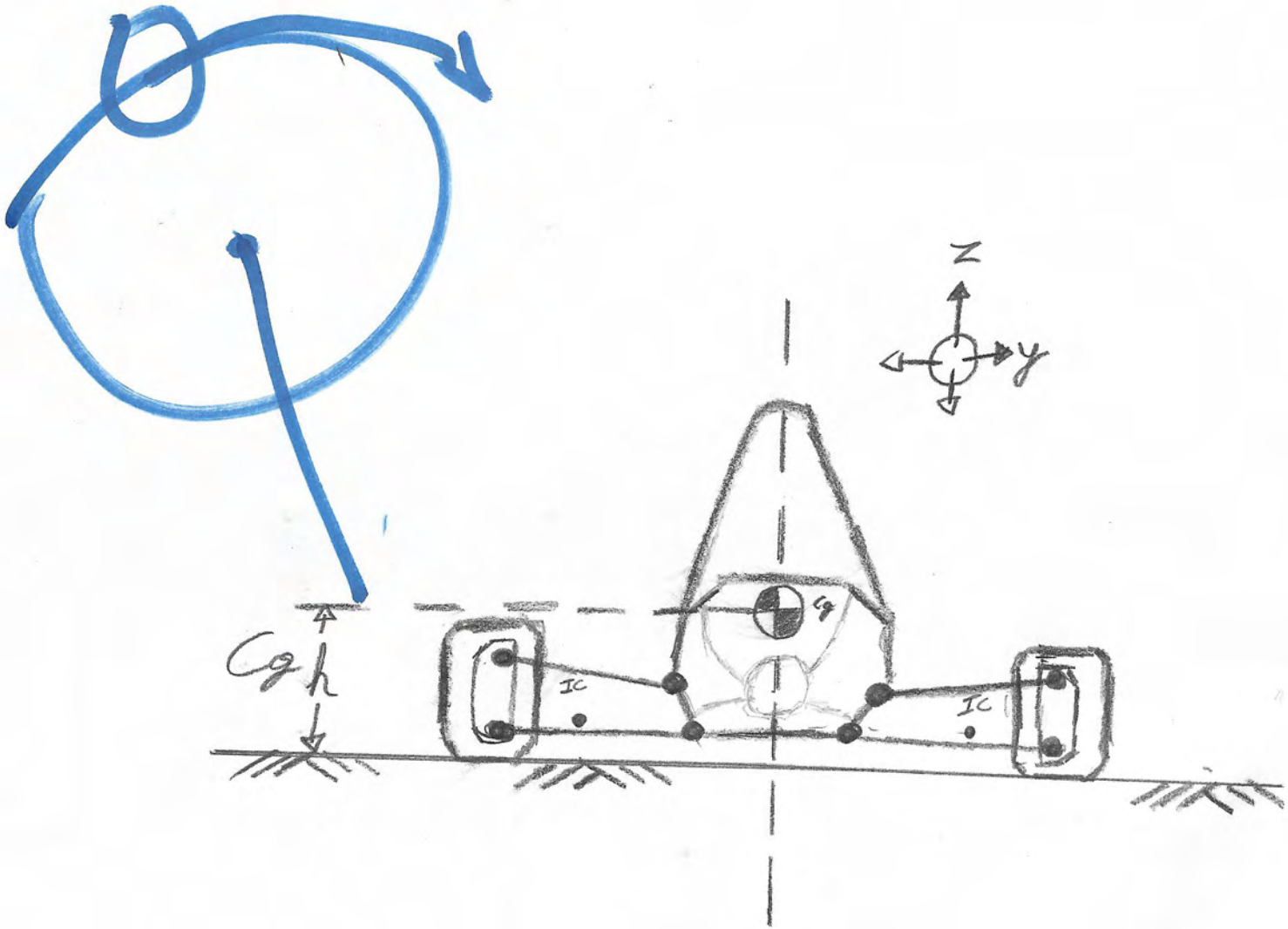
z
y
Cg
h
IC
IC
Cg

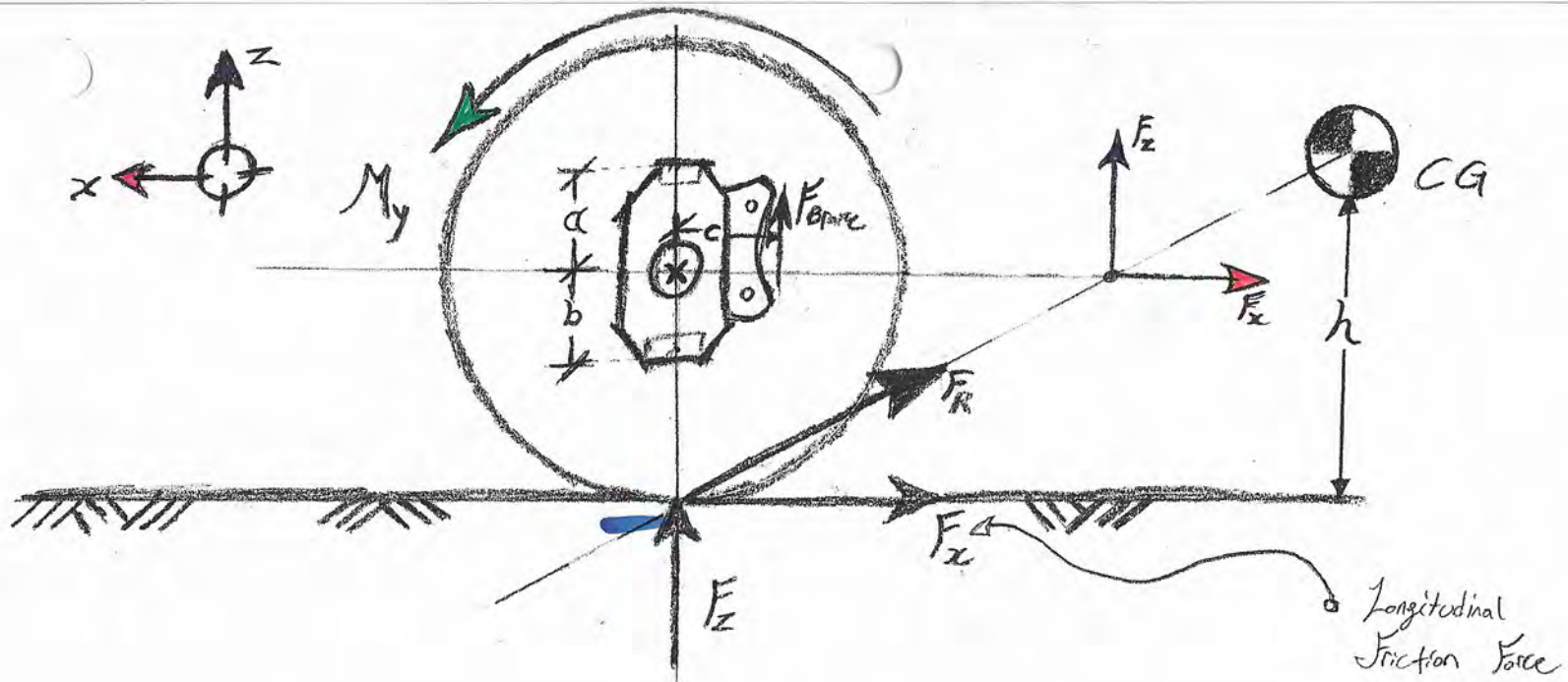
z
x
M_y
a
b
c
F_{Brake}
F_z
F_x
CG
h
F_R
F_x
F_z
Longitudinal Friction Force

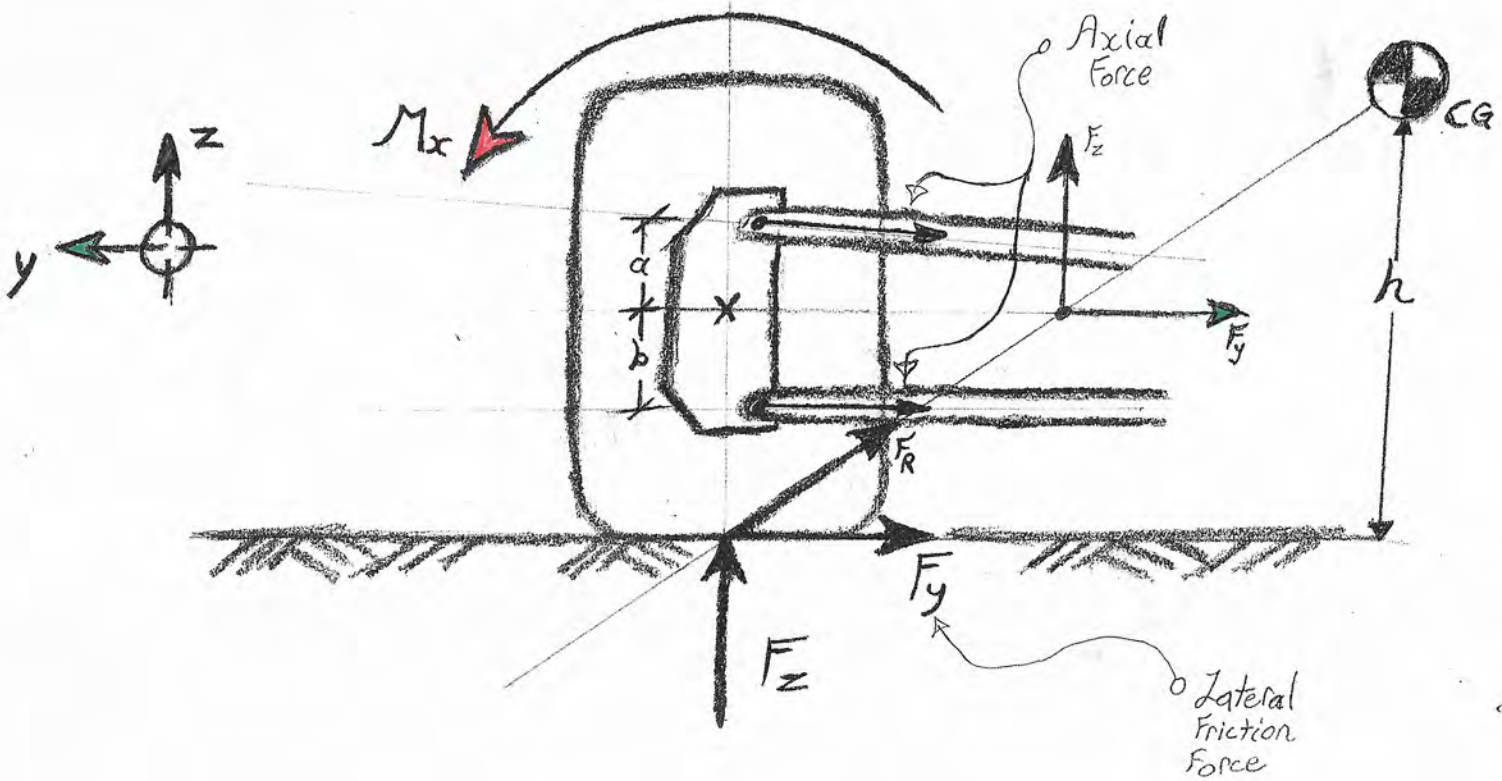
z
y
M_x
Axial Force
F_z
CG
a
b
h
F_y
F_R
F_y
F_z
Lateral Friction Force

05/02/17

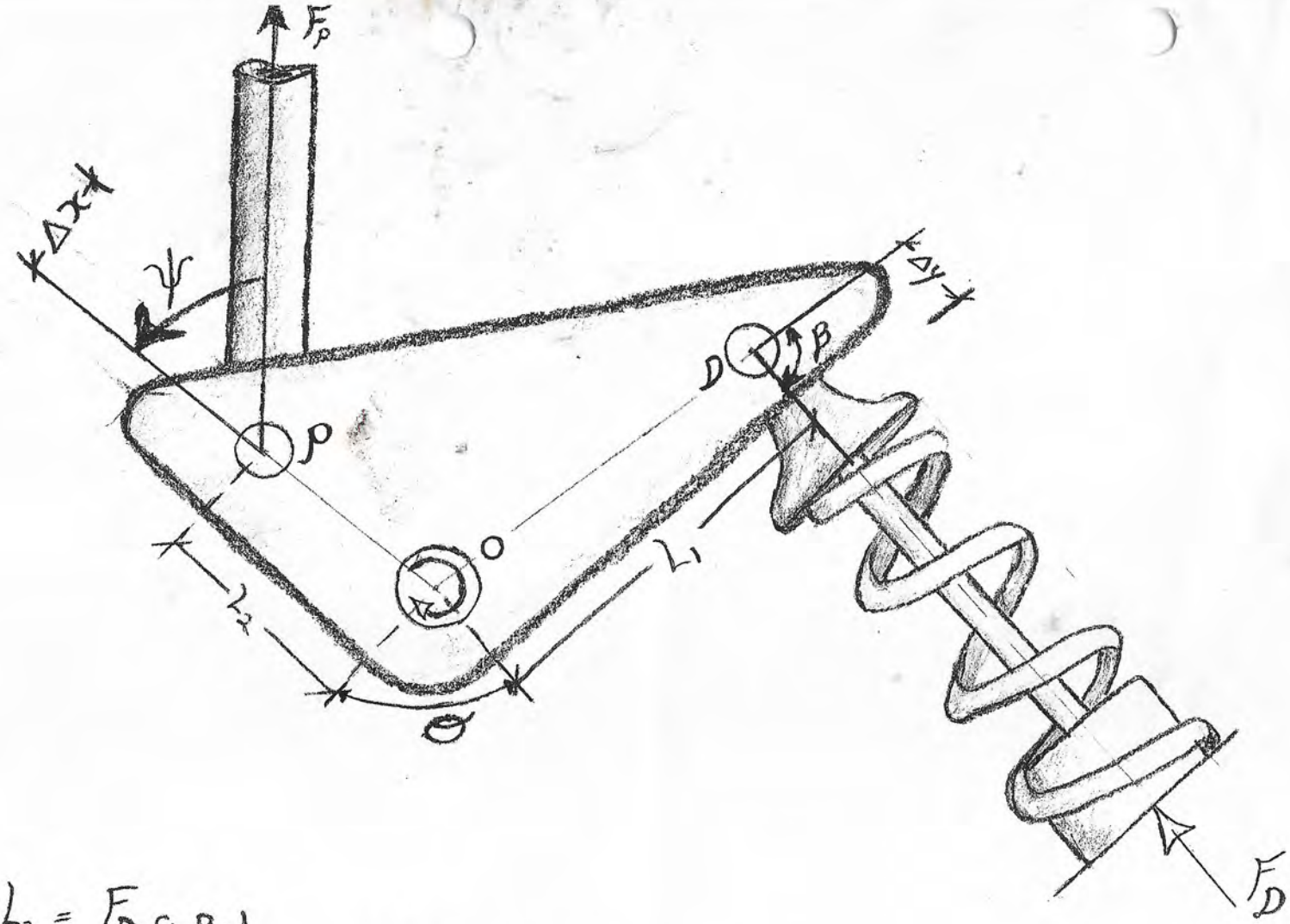

$$F_P \sin\psi \cdot L_2 = F_D \sin\beta \cdot L_1$$

θ Should be 90° to keep linear ratio

$$\frac{F_P}{F_D} = \frac{L_1 \sin\beta}{L_2 \sin\psi}$$

Small Angle Approx.

$$\frac{\Delta x}{\Delta y} = \frac{L_2}{L_1} \cong \frac{\text{wheel travel}}{\text{Shock travel}} = M_r$$

[FSAE WHEEL LOADING CASES] Nov 14th, 2018.

F_Y - Lateral Forces:

Using FRC19 tire model, run 17 of Round 8. Hoosier 16x7.5-10 LCO mounted on 7" wide rim.

$$\boxed{\text{Max. } F_Y = 2792\ N}$$

Maximum cornering grip at 1100 N of F_Z. Represents a weight transfer of around 80/20; a reasonable upper bound.

Applied at $R_L = 193.5mm$

All figures coming from the tire data give conservative estimates. In general, the unrealistically ideal conditions of the test environment allow for forces of around 50% more than those possible in a well designed car.

** Force transferred at tire bead contact area - lower half of tire

F_X - Longitudinal Forces:

No drive/brake tests were done on the tires being used, so there is no longitudinal data. Referencing data for Hoosier 20.5x7-13 R25B's, maximum longitudinal force is around 1.04 times greater than maximum lateral force.

$(2792\ N)(1.04) = 2903.7\ N$

$$\boxed{\rightarrow \text{Max } F_X = 2903.7\ N}$$

Transferred at bead contact area

Loaded Radius $= R_0 - \frac{F_Z}{k_T}$

$= 203.2mm - \frac{(1100N)}{114.1\ N/mm} = 193.5mm$

** Applied at loaded radius of 193.5mm **

F_Z - Normal Forces:

The maximum normal force in a wheel will not occur due to static weight of the car or weight transfer, but under disturbances due to bumps in the road.

Assuming a 3g's bump on the car, a maximum one-wheel loading of 2295 N occurs at each tire in the rear end.

$$\boxed{\text{Max } F_Z = 2295\ N}$$

Consider the resultant of this force to act at the geometric center of the contact patch.

Because a large portion of the tire's stiffness comes from the air pressure, a large portion of this loaded is reacted not through the tire bead but onto the entire outside surface of the rim, in addition to the force already present due to inflation pressure.

→ Run a load case where all F_Z is reacted through tire bead, and another where its reacted entirely as air pressure.

FSAE WHEEL LOADING CASES Nov. 14th, 2018.

Air Pressure

Maximum expected inflation pressure: 14 PSI $= \frac{14}{0.145} = 96.55$ kPa

To find how much normal loads on the tire add to this pressure, find the inside surface area of the rim + tire.

$$P_{ADDED} = \frac{2295\,N}{0.568\,m^2}$$

$$P_{ADDED} = 4040\ N/m^2 = 4.04\ kPa$$

$$A = \left[10.0''\left(\frac{25.4\,mm}{inch}\right)\right]\left[\pi\right]\left[7.0\left(\frac{25.4\,mm}{inch}\right)\right] + \pi\left[16.0''\left(\frac{25.4\,mm}{inch}\right)\right]\left[7.0\,(25.4)\right] + 2\left[(16.0(25.4))^2 - (10.0(25.4))^2\right]$$

$$A = \pi\left[(0.254\,m)(0.1778\,m) + (0.4064)(0.1778\,m)\right] + 2\left[(0.406\,m)^2 - (0.254\,m)^2\right]$$

$$A = 0.368\,m^2 + 0.200\,m^2 = 0.568\,m^2$$

Maximum pressure in the tire at a given time is the sum of those two pressures.

$$\boxed{Max.\ P = 100.59\ kPa}$$

Applied to outside cylindrical face of the rim.

Use these four loading cases as the basis for design.

Friday 10-1

Tues 1-2:30

Wed 11:30 – 12:30

Inertial Loading (Rotation)

Max Velocity = 140 km/hr $= \frac{140\,000}{3600}$ m/s $= 38.8$ m/s

Tire Circumference $= 2\pi r = 1.237$ m

$\Omega = 1.1$

$$f = 1.1\left[\frac{38.8\ m/s}{1.237\ m}\right] = 34.5\ s^{-1} \longrightarrow \omega = 2\pi f = 216.7\ rad/s$$

Pacejka 2006 Formula

$$F_y = D\sin\left[C\arctan\left(B(\alpha+S_H) - E\left(B(\alpha+S_H) - \arctan B(\alpha+S_H)\right)\right)\right] + S_V$$

In MATLAB:

x0sample/simplefit

$$\begin{bmatrix} x_1 = D_y \\ x_2 = C_y \\ x_3 = B_y \\ x_4 = E_y \\ x_5 = S_{V_y} \\ x_6 = S_{H_y} \end{bmatrix}$$

Tire temperature readings throughout the tread can give an indication of optimal inflation pressure.

* to make raw data transparent, you have to plot as scatter and use MarkerFaceAlpha or MarkerEdgeAlpha.
→ Also, change the plot order.

→ So, in code form:

$$Pcurve = (x_1)\sin\left(x_2 \operatorname{atan}\left(x_3*(SA+x_6) - x_4*\left(x_3*(SA+x_6)\right) - \operatorname{atan} x_3*(SA+x_6)\right)\right) + x_5$$

Why would function be returning complex values/not graphing properly?

- Check brackets of eqn
- Check inputs - how are coefficients generated?
- Function tolerances within simplefit and lsqnonlin?
- Is the output complex over all sweep intervals? Which ones are graphing?

→ lsqnonlin is not the issue. there's a problem with how your coefficients are being generated, or your equation.

In x0sample you have imaginary entries, and the variable is the size of 'length' instead of 6x1 vector

Problem is likely coming from the way you've indexed SA. Its creating a corresponding value for each SA data point.

$$P = (x_1) * \sin\left[(x_2) * \operatorname{atan}\left((x_3) * (SA + x_6) - (x_4) * (x_3) * (SA + x_6) - \operatorname{atan}(x_3) * (SA + x_6)\right)\right)\right] + x_5$$

$$C = 1 \pm \left[1 - \frac{2}{\pi} \arcsin \frac{y_a}{D}\right]$$

$\Rightarrow$ C is the shape factor. It can be found from the peak value D and the value of the horizontal asymptote y_a

Print Out all notes for Suspension section.

Tire Notes (From Pat Clarke) 09/08/2015.

Bias Ply vs. Radials

Bias plys have stiffer sidewalls and looser base tread than radials. This makes them more sensitive to camber.

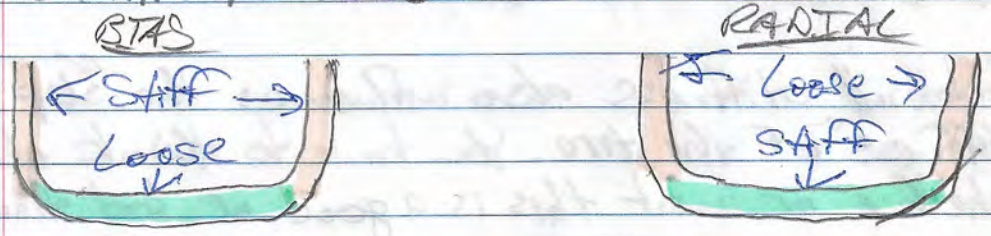

So, in suspension design for a radial, you wouldn't have to go as far to ensure camber recovery in roll.

The downside of the radials comes from the fact that they are more pressure sensitive, because the looser sidewall does less to contribute to tire stiffness. Therefore the importance of having consistant inflation pressure is increased.

Note The reason for using Nitrogen to inflate is because it will maintain a more constant pressure than air will under the same conditions. Humidity in air is especially detrimental. (Nitrogen > Dry Air > Air) *.

→ Sidewall Stiffness Impact on Steering

If the sidewalls are stiff, then that minimizes the ability for the rim to turn "inside of" the tire by twisting the sidewalls. This makes steering less responsive. Responsiveness can be improved by ①: Stiffer sidewall, or ② Running static toe in/out so the tires are already loaded before initiating a turn.

On that basis, bias plys have the advantage:

also, stiffer sidewalls means it is more difficult to "push through" the tire under lateral forces. In a corner, tire deflection causes the scrub radius to decrease on the outside front, increase on the inside front.

Sidewall stiffness also influences the "slip angle stiffness" of the tire. You have to think about whether or not this is a good or bad thing.

Radial tires also lose traction less gradually than Bias, because the stiff tread/soft sidewall doesn't allow it to "peel away" like a ~~radiator~~.

[Tire Wear]
Plasticers are a part of the tire compound that makes them grip. Over time, running the tire through heat cycles, they evaporate and leach from the tread. This causes the tire to harden and grip to decrease. Therefore tire performance can deteriorate long before the tread has worn out.

Sidewalk Bias ply tires have a bigger variance in circumference with pressure because of a lack of radial belts.

* TIRE MODEL TO ADD *
- Coefficient vs. SR, vs. SA, vs. camber, temp.
- F_z vs RL
- M_z vs SA.
- Coeff. friction calc.
- F_T vs. lateral load transfer.

Tire Test Data June 4th, 2018.

Hoosier ~~14~~ 20.5x7.0-13 R25B
165 tire 29, 30, 31, 32, 33, 1, 2?

Spring rate of tires is in an order of magnitude of the suspensions. Damping is lower, somewhere around 7% of critical.

Tire 1 Runs 8, 9, 10 Cornering
~~Tire 2 Runs 11, 12, 13~~
Runs 54, 55, 56 Drive/Brake

Variables

ET = time - seconds
V = velocity - m/s
N - RPM - RPM
SA = Slip Angle - deg
IA - KPI - deg
RL - Loaded Radius - cm
RE - Effective Radius - cm
P - Pressure - kPa
F_x - Long. Force - N
F_y - Lat. Force - N
F_z - Vert. Force - N
M_x - Overturning Moment - N.m
M_y - Roll Resistance Moment - N.m
M_z - Self Aligning Torque - N.m
NF_x - Normalized F_x - Unitless
NF_y - Normalized F_y - Unitless
RST - Road surface temp - C°

TSTI - Inboard Tire Temp - C°
TSTC - Center Tire Temp - °C
TSTO - Outboard Tire Temp - °C
AMBTMP - Ambient Temp - °C
SR - Slip Ratio - Unitless

To seperate your sweeps group by positive/negative!

Any F_x applied to a tire results in a longitudinal slip K. F_x of zero occurs only when the driving torque is equal to the rolling resistance moment.

[2019 Projects]

- Damper research
- ~~Step~~ Steering system design
- Tires
- A-arms / suspension compliance
- Uprights and hubs
- Suspension system design

1 kPa = 0.145 psi
ET_P12 = beginning to 716.834
ET_P10 = 824.892 to 1273.389
ET_P14 = 1382.551 to end

3 inclination angles for each pressure. 0, 2, 4 deg.
Slip angle varies between 0 and 13 degrees.

Fz Values: 1100 N, 1550 N, 650 N, 200 N

So what does the test machine vary through the test?
Pressure: 12 → 10 → 14
kPI: 0 → 2 → 4
Fz: 1100 → 1550 → 650 → 200, 440 N
SA: 0-13 degrees either way
Velocity: 40 kph for cornering_2.
40, 24, 72 for cornering_3.
40 for drive_brake_1, drive_brake_2.
40, 24, 72 for drive_brake_3.

Fz: 50

Curve Fitting Troubleshooting 09/12/2015.

✓ $a_y = 2.597(10)^3$
× $B_y = 14.10 + 19.28i$
× $C_y = 3.0 - 4.10i$
$D_y = -8.27$
× $E_y = -1.22 - 4.41$
✓ $SH_y = 0$
✓ $SV_y = 0$
✓ $x_m = 0.0180$

cornering stiffness = 1x1 cfit
maxFindx = 1
linear Points = 99x1 double

Tire Notes (From Tune to Win)

Camber

No Camber

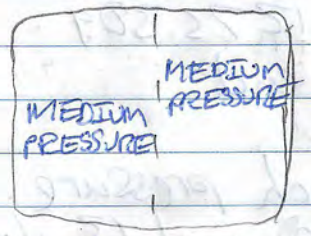

Camber

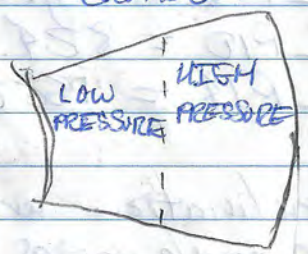

- Changing the inclination angle of the tire relative to the ground has the effect of decreasing contact patch area and unbalancing the pressure distribution.

Temperature

- Temperature is increased by:
  - Running lower pressures
  - Running too much camber
  - Running to soft a tire compound

Note Rain tires are designed for a lower temperature range.

- Deformation from slip, which occurs in cornering as well as with static toe.

Pressure

- Set tire pressure on the basis of hot pressure.
- Hot pressure differences are effected more by different humidities than they are running on different tracks.
- If the cornering is uneven on the track, you can think about staggering your starting pressures.

Tire Notes (From Engineering Explained) 09/09/2018.

- Weight of a car is very important because the coefficient of friction for tires does not hold constant with increasing normal force.
- Because of the curvature of the tire, the contact patch area does not increase proportionally with normal force. This of course causes the pressure to go up. ($P = F/A$)
- Increasing the width of the tire increases the size of the contact patch by widening it, thereby bringing the pressure back down.

Tire Notes (From Tune to Win) 09/10/2018.

- The point where sliding begins is not the maximum of the cornering force plot. It is the point where the plot begins to become non-linear.
- Sliding initiates in the region of the contact patch where pressure is the highest.
- The maximum cornering force has a combination of elastic and sliding friction. After the maximum, the tire is entirely in sliding and rapidly loses cornering force.
- It's worth realizing that once the tire is entirely in sliding, you don't immediately lose all your grip right away - it is reduced (think static vs dynamic friction) but control can still be regained.

WAYS OF GENERATING SIDE FORCE

- Centrifugal force (cornering)
- Conicity and plysteer
- Camber thrust
- Bump (one wheel)
- Side winds
- Uneven drive/brake power

Tire Notes (From Tune to Win) 09/10/2010

[Slip Angles]

- One reason to keep slip angles low is that excessive tire deformation will cause the tire to overheat. Beyond the heat needed to bring it to the best operating range, heat is detrimental - it deteriorates the tire and consumes power.
- Less slip angle also means that you can use a softer compound, i.e. get more grip.

[Slip Ratio]

- Like slip angle, maximum grip is achieved with some degree of sliding. However, if the tire is visibly spinning in accel or alternatively, visibly locked up in braking, then this maximum threshold has been exceeded.

General

- Coefficient of friction decreases with normal load because as pressure increases in the patch, it gradually loses its resistance to shear.
- Although this is the case, traction capacity always increases with increased normal load because in $F_T = \mu N$, N rises faster than μ falls.

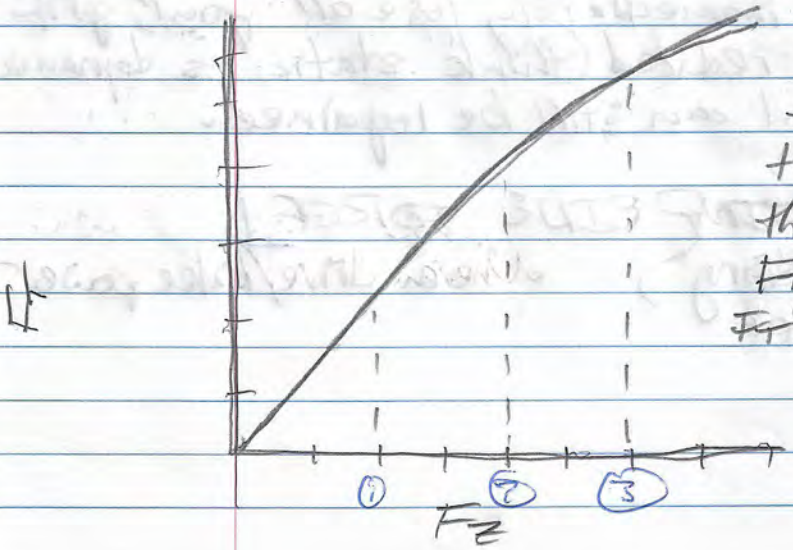

Lateral load transfer reduces the tractive potential of that pair of tires, even though total F_Z is the same, because the curve decreases. F_T @ position 2, x 2 is more than F_T @ position 1 + F_T @ position 3.

SR (Slip Ratio): Quantifies wheel velocity vs. vehicle velocity. -1 when brakes in full lock (vehicle has velocity, but tire not spinning). 0 when wheel velocity and tire velocity are the same. 1 when wheels spinning with no vehicle velocity.

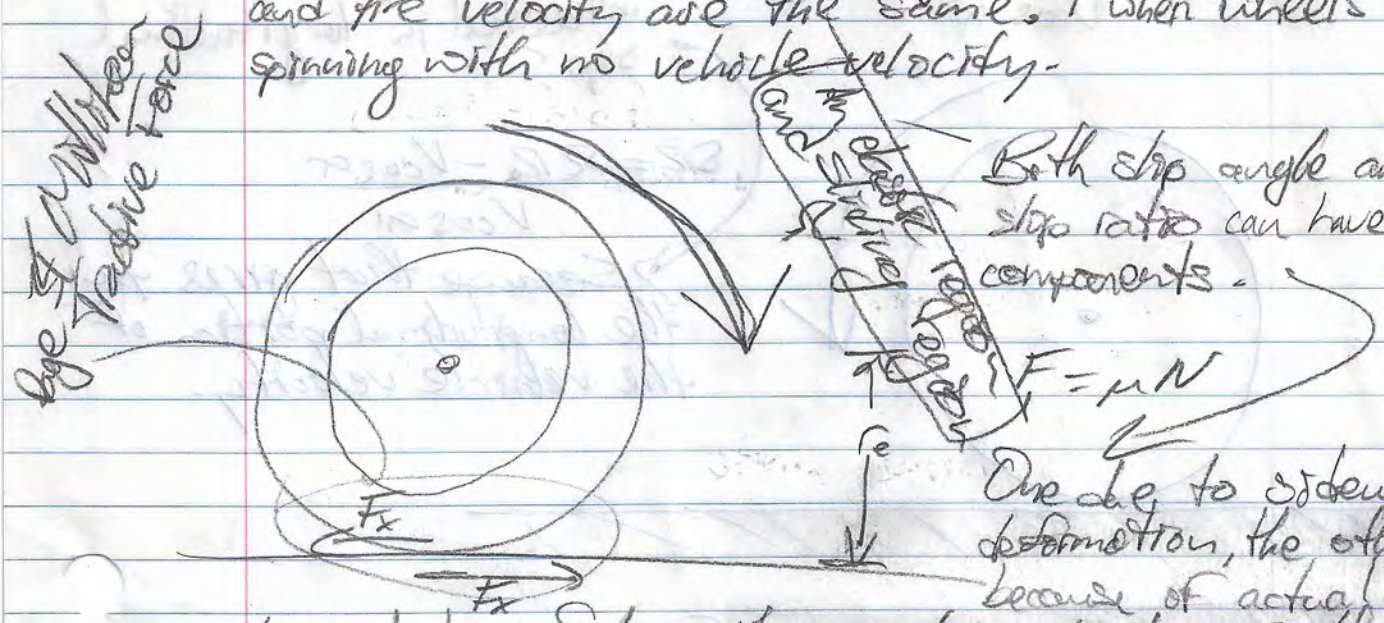

$$y = D\sin\left[C\arctan\left(Bx - E\left(Bx - \arctan Bx\right)\right)\right]$$

$$SR = \frac{\Omega R_0 - V\cos\alpha}{V\cos\alpha}$$

Why is α coming in for SR, if were interested in longitudinal slip?

$$SR = \frac{\Omega R_0 - V\cos\alpha}{V\cos\alpha}$$

Because that gives you the longitudinal portion of the vehicle velocity.

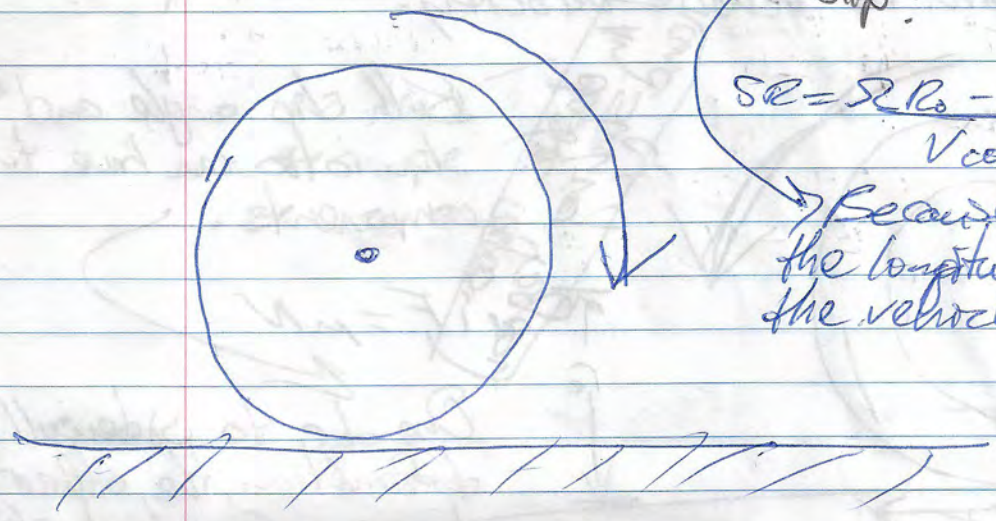

Resultant of F_x, F_y is tractive force

Functions in MFEval

Effective Radius Calc	Have
Contact Patch	
Loaded radius	Have
M_z	Have
M_x	Have
F_y	Have
F_x	Have
NF_x	Have
NF_y	Have

Ryan Miller [TIRE THEORY - 1] 02/18/2019.

The purpose of tires is to transmit force to and from the road using friction.

$$F_{FRICTION} = \mu F_z$$

Simple equation. Obviously the force is linearly proportional to μ and N (they are to the power one). What makes tire behaviour difficult to understand then? Coefficient of friction (μ) is not a constant; it varies and is dependent on many operating conditions. Some of the main factors affecting a given tire are:

- F_z (how much normal force is there and how is it distributed in the contact patch?)
- Pressure
- Camber
- Temperature
- Speed
- Wear

~~F_z~~

~~Normal force is linearly proportional to normal force~~

[How Does Friction Work in a Tire?]

The tires are able to transmit force through friction by means of two mechanisms/phenomena:

- Mechanical "Gearing": Because the road is hard and has roughness, and the tire is quite flexible when the tire has normal load on it that force will cause the tire to deform and fill in the ~~va~~ low spots. This creates a gear-like interface which aids in the transmission of force.

- Molecular adhesion: Molecular attraction/bonding also contributes to the grip of the tire

→ Let's return to the factors affecting grip.

Orion Miller [TIRE THEORY-2] 02/18/2019

F_z

Many materials exhibit Newtonian friction, which means that as normal force increases, so does the μ as the surfaces get pushed better into eachother. Tires however do not have this relationship, the more they are loaded normally the more their capacity to resist shear is reduced (Read Pacejka for more).

$\boxed{\mu \text{ is inversely proportional to } F_z}$

The relationship between these two is something resembling a negative exponential. Multiplying through by an increase in F_z gives you the curve of friction force vs. F_z.

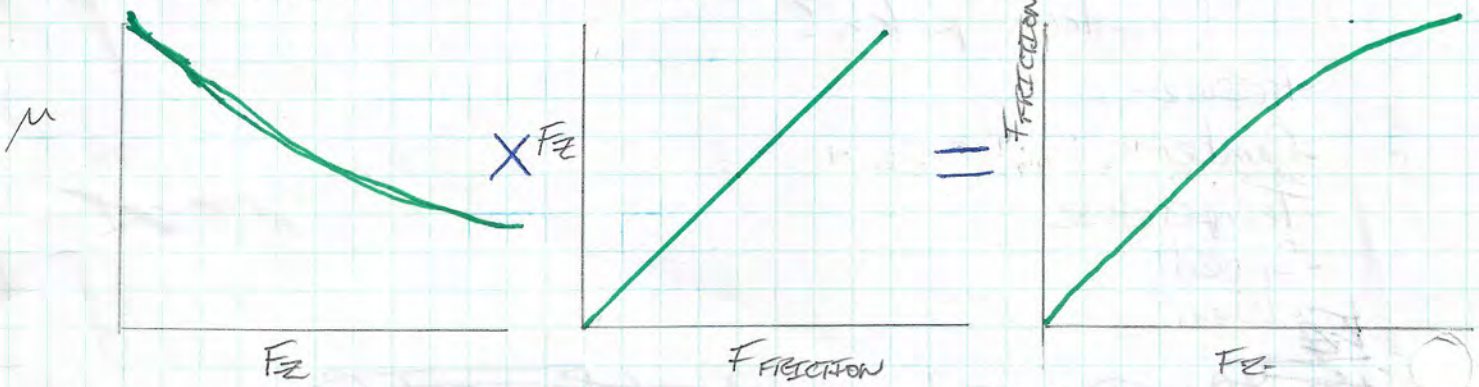

μ/F_z will eventually tend to a horizontal asymptote at zero, and $F_{FRICTION}/F_z$ will also tend to a horizontal asymptote ~~as well~~. This is because the tire eventually reaches an ultimate traction capacity where more normal force is no longer of any use. However this point is far beyond the F_z's encountered on ~~FSAE~~ tires; the important thing to take away is that there will be gradual decreases in μ as the F_z on your tire increases.

This ~~fact~~ further complicates tire dynamics when considering the fact that ~~that this~~ this ~~force~~ is transmitted through a contact patch and that the distribution of it (i.e. pressure) is not constant everywhere. The implication is that μ varies locally throughout the contact patch according to local pressure distributed.

F_z varies longitudinally along the contact patch with a distribution similar to what's drawn on the right (when the tire is spinning). The reason for this asymmetry is due to material properties of the tire. Tires are a viscoelastic

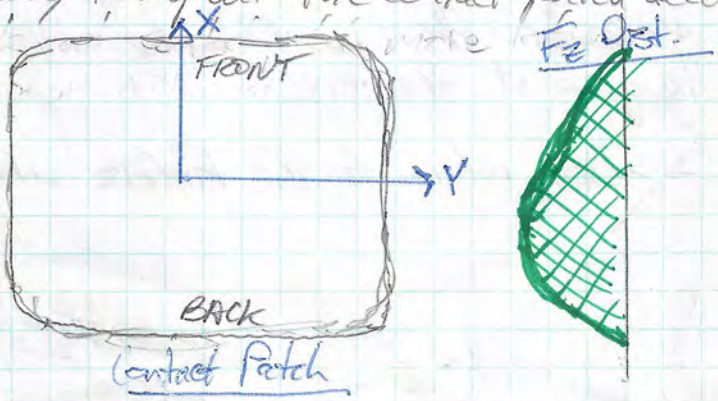

material (they exhibit behaviour that both elastic and viscous materials are characterized by). Deflection/strain is proportional to force, but is also time dependent, not instantaneous like a purely elastic material. This time dependence is what drives the asymmetry.

Front of Patch	Back of Patch
• Lower F_z, higher μ	• Higher F_z, lower μ.

→ What conclusion can we draw?

Conclusion: From the perspective of having max grip, it is in your interest to have the normal force distributed as evenly as possible. This means having the weight distributed evenly between your four tires and within their individual contact patches. This is because the $F_{FRICTION}/F_z$ plot is not linear. Looking again:

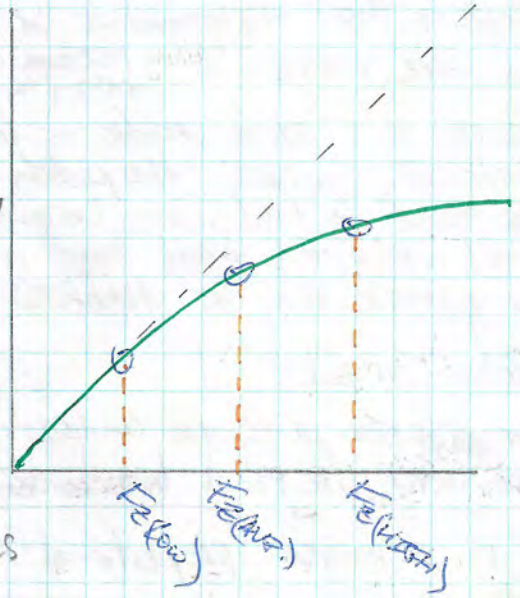

Say $F_{z(AVG.)}$ is the weight of the car divided by 4 (corner weight at even F/R distribution) and $F_{z(HIGH)}$ is the weight at the front tires during braking, $F_{z(LOW)}$ is at the rear. The available traction is reduced in this state of weight transfer because:

$$4(F_{z(AVG.)}) > 2(F_{z(LOW)}) + 2(F_{z(HIGH)})$$

You can think about the contact patch in this same way. You have an avg. pressure $\left(\frac{F_z}{A_{(contact)}}\right)$ and then variations above and below throughout.

Pressure

Inflation pressure of the tires influences grip by changing the stiffness of the tire. A tire is essentially a pneumatic spring, most of its pressure comes from the air because when the tire deforms it wants to resist being compressed. A small amount of stiffness is also contributed by that inherent in the tire rubber. Tires can be deformed in several different ways:

[RADIAL DEFORMATION]

[LATERAL DEFORMATION]

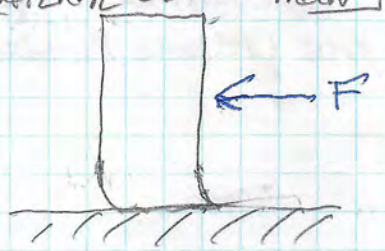

[TORSIONAL DEFORMATION]

Orion Miller [TIRE THEORY - 4] 02/18/2019.

We could draw a diagram of tire stiffness under radial load (front view).

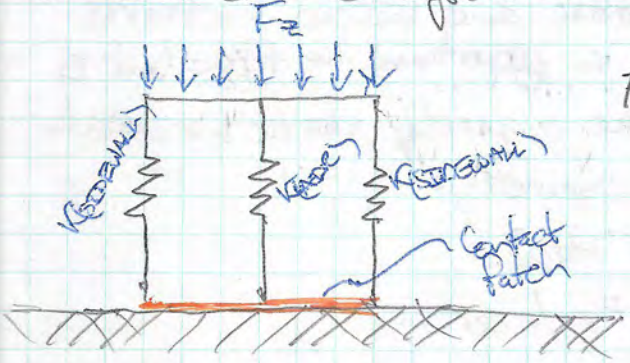

$$F_z = k_{(AIR)} x + 2 k_{(SIDEWALL)} x$$

This is a good time to talk more about tire rubber. ~~It generates heat~~ Because of its viscoelasticity, it generates heat not just from friction at the contact patch but also anywhere within the material when it is being deformed. We can see that by lowering pressure we lower $k_{(AIR)}$, therefore increasing the displacement x required to react a given F_z. This heats the tire more. (Rolling resistance comes from this too. The tire deforms as it spins, it takes energy to do this which is dissipated away as heat)

Also, air pressure can ~~drive creeper or lateral~~ cause the tire to heat unevenly laterally across the patch. High air pressure will cause the center of the tread to heat more because it's "doing most of the work", whereas low pressure will make the tread heat more along the edges because the tire is relying more on the stiffness of the sidewalls.

[General Effect on Grip]

Generally, lower ~~pressure~~ pressure causes grip to increase. It makes the tire tread dig down more into the road (mechanical gearing concept from earlier).

$$\boxed{\mu \text{ is inversely proportional to } P \text{ (pressure)}}$$

["Hot" and "Cold" Pressure]

Because the air temperature changes with tire temperature, so does pressure. Hot pressure should be whatever pressure is chosen as best, then subtract off however much the tire is expected to heat while racing to find initial (cold) pressure.

Considerations for Pressure:

- Change in grip with pressure
- Change in heating with pressure (magnitude + distribution)
- Change in stiffness with pressure (how does that effect your 1/4 car susp. model? tire stiffness is part of that. Also cornering stiffness)

- Tire will also start de-beading once pressure is lowered beyond some threshold

Camber

In a cambered wheel, the tire contact patch will become smaller and its force distribution less uniform. This is bad because as discussed, this will make avg. contact patch pressure go up (grip ↓) and the variability of contact patch pressure will go up (grip ↓).

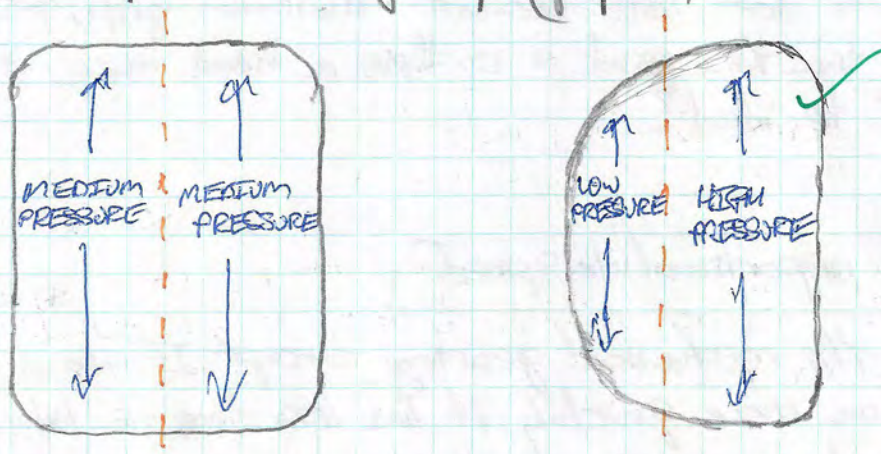

0° Camber Wheel

Cambered Wheel

The tire would be in an orientation like this (from front view).

We can see that the optimum orientation of the wheel is to have zero degrees of camber (from a perspective of grip). However, what must be considered is that in cornering, body roll than causes change in the camber of the wheels. We can therefore compensate by setting a static camber angle on the car. This prevents the tires from going into positive camber during roll, however large amounts of static camber will be of some detriment to the car in straight line accel. when the roll angle is zero.

When making a decision on camber, the tire stiffnesses should also be of interest. Stiffer tires will be more camber-sensitive, because a less stiff tire is capable of deforming in the sidewalls such that the whole tread keeps contact with the ground even when the rim has a camber angle.

Also, cambered wheels produce a lateral force referred to as camber thrust. Some amount of this can be useful if it has a stabilizing effect on the car.

Otto Miller [TIRE THEORY-6] 02/18/2019.

Temperature

All tires will have some optimal range of operating temperature. Available grip will decrease both above and below this temperature. Wear will be accelerated at excessive temperatures. It should be of interest to see what the curve looks like around maximum grip; does it decrease sharply moving away from this point or is there a broad range of temperature that is "pretty close" to ideal?

Speed

μ is inversely proportional to speed

This comes back to the mechanical gearing concept. If the tire is moving across the road surface more quickly, it has less time to bite in to the roughness of the road. Similarly, grip also decreases when the tire is sliding for this reason.

Wear

μ is inversely proportional to wear

Tires should have a quick break-in before being used. Do a steady state turn/figure 8, start slow and speed up slowly. After this the tires are at their best and grip will deteriorate gradually with time. Grip will decrease substantially before they physically look like they need to be replaced.

Grip decreases because tires include a class of compounds called plasticizers which are used to make the compound stick. They slowly evaporate off as the car is heat cycled.

This fact of life makes tuning the car more complicated; because grip changes as you drive, the optimum setup of the car becomes a moving target.

This is it for factors affecting grip. Next we'll look at longitudinal and lateral forces.

Tiron Miller [TIRE THEORY-7] 02/18/2019.

The force of friction (tractive force) is further decomposed into longitudinal (F_x) and lateral (F_y) forces.

$$F = F_x + F_y$$

A traction circle is useful for seeing the available traction capacity of the tire at different proportions of longitudinal and lateral forces:

Traction Circle

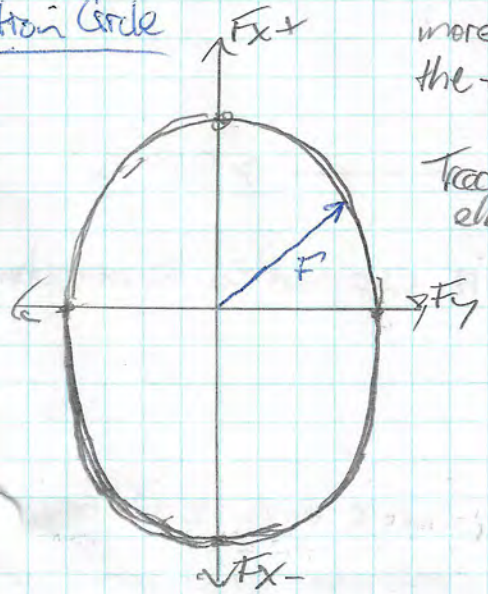

More longitudinal force is available in braking because more accel. can be achieved while braking than from the two driven wheels.

Traction circles do not necessarily follow an ideal elliptical shape. Test data is needed to generate them.

[Fx - Longitudinal Force]

Comes from driving and braking torques. Usually plotted against slip ratio. (SR). SR is a quantification of the difference between how much speed the car "should" have (calculated from $v = r\omega$) and how much it actually has. Slip Ratio is a bit of a misnomer, the tire does not actually have to be "sliding" to have a slip ratio. Even if traction hasn't been lost, there can be a SR because of tire deformation. Under driving and braking torques, the tire deforms torsionally about the spindle axis in accordance with the direction of force:

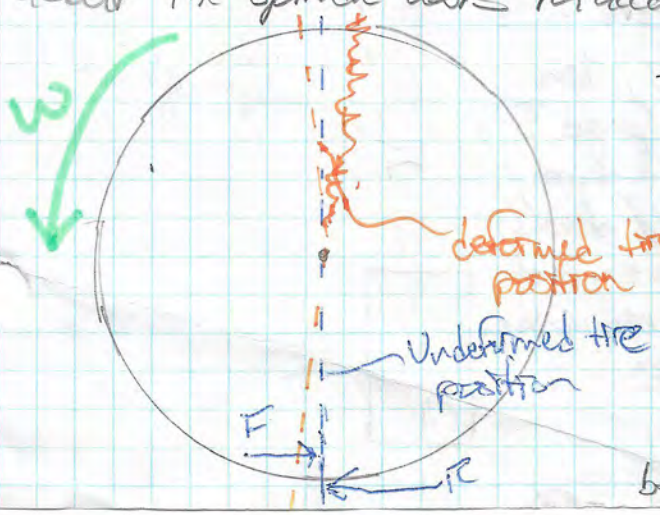

The tire deforms @ contact patch due to ground reaction force. This resisting force opposes the direction the tire is spinning. Because this force is causing deformation in the direction opposite of the rotation, there is a localized reduction in angular velocity at the contact patch. The tire then springs back forward upon leaving the contact patch and speeds up temporarily, because the laws of physics can't be broken and the tire still has to turn at ω RPM, but linear speed varies slightly through the rotation.

This effect is what allows there to be a slip ratio without sliding. The radius used for these calcs is Effective Radius (R_e). This is the value of R where if SR were zero (free rolling tire - input power is exactly equal to rolling resistance), v would equal rω. The value of R_e is somewhere between R_0 (unloaded radius) and R_L (loaded radius).

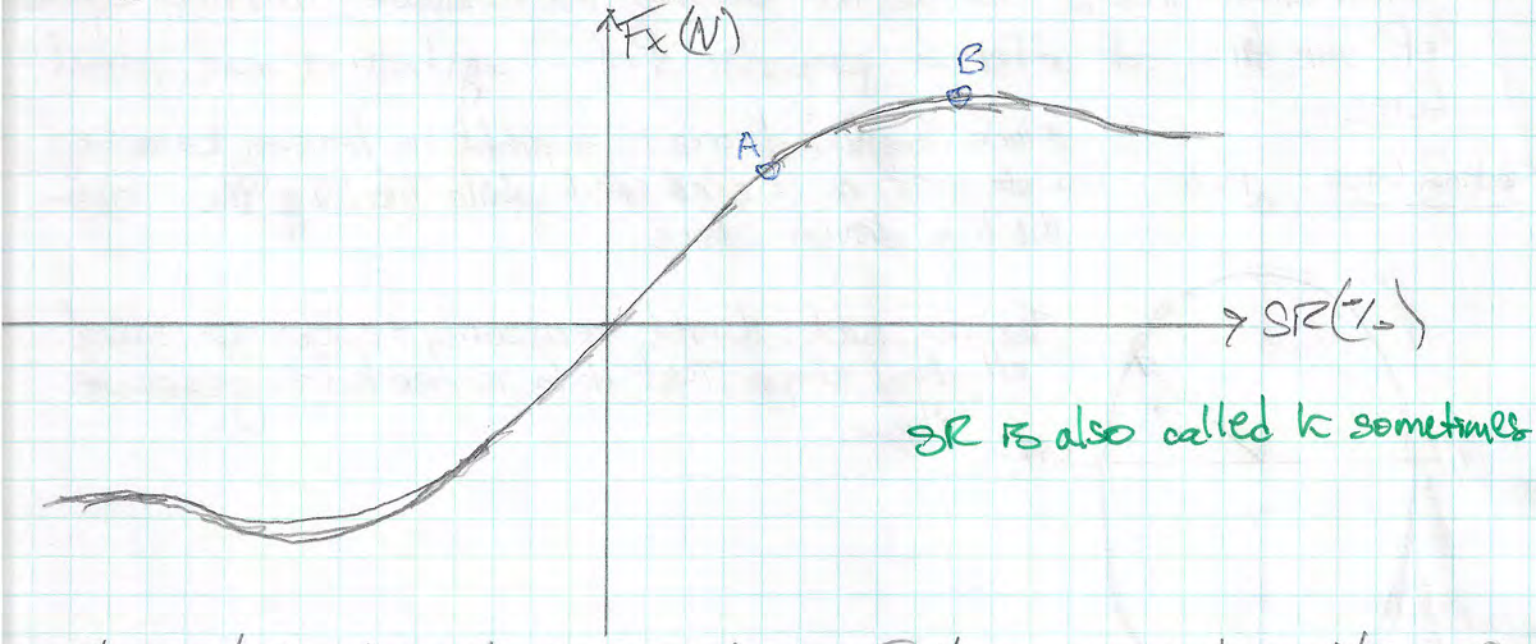

SR is also called κ sometimes

The point (a), where the linear portion of the curve ends, is where sliding starts to initiate in the contact patch. Maximum grip occurs at (B), after which sliding is happening entirely and traction drops off.

[Lateral Force]

Lateral force occurs from cornering loads. It is typically plotted against slip angle. Slip angle is the angle between the direction the tire is going in vs. the direction the tire is pointed in (its heading).

Again, the tire does not need to be physically sliding sideways for there to be a slip angle.

If there is a cornering load on the tire, then there will be a constant lateral deformation (page 3) that will ~~ease~~ cause the tire to shift over sideways as it rolls while remaining pointed straight ahead.

The amount of slip angle present at a moment in time is dependent on things like momentum of the car, cornering stiffness of tires, steering angles, weight distribution.

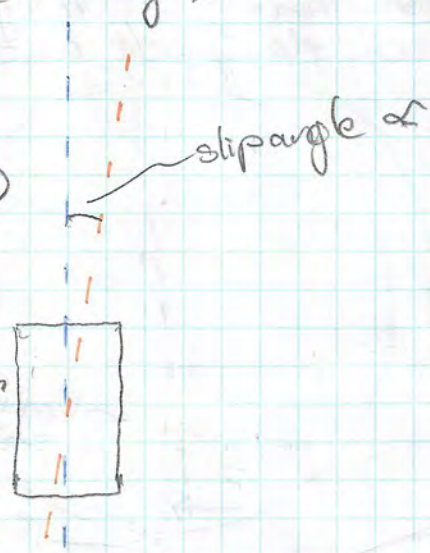

Ian Miller

TIRE THEORY-9

02/16/2019.

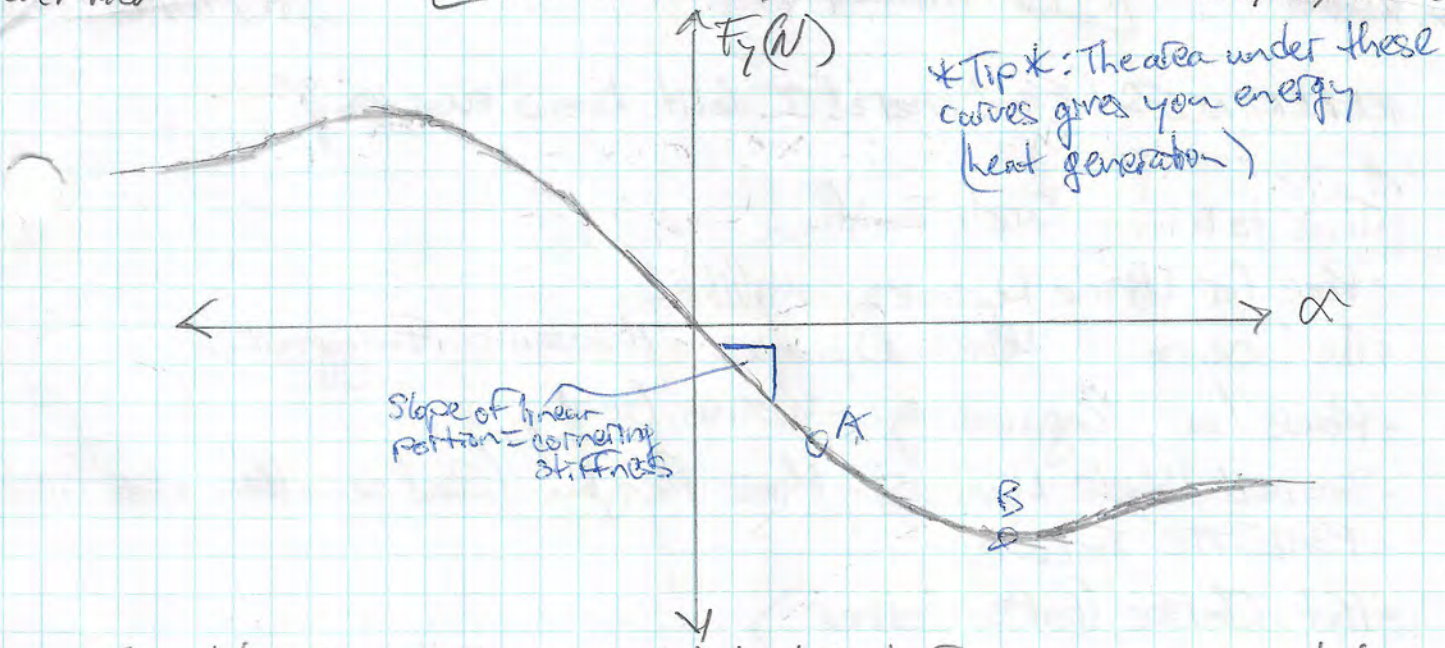

The plot looks similar to longitudinal but for some reason rotation is for it to be flipped around the axes the other way.

Note that because normal force is not distributed evenly in the contact patch, neither are the produced longitudinal or lateral forces. The lateral forces can be resolved into a resultant lateral force. It acts backward from the geometric center of the contact patch, at a distance called the pneumatic trail:

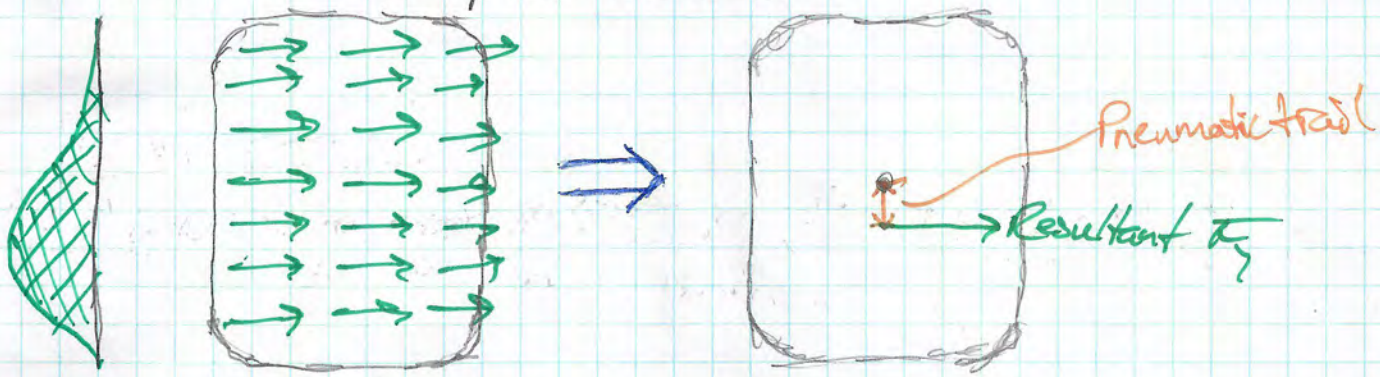

An interesting connection to make from this is that as the tire starts losing grip this resultant point will shift. Grip will be lost in the back first because it has the highest normal load. This affects your self-aligning torque (M_z), which is equal to pneumatic trail times resultant force ($F \cdot d$). Therefore, max. M_z should occur at a slip angle that corresponds somewhere close to point (A), because the F_y shifts forward after this point, decreasing the moment arm ~~and the~~.

* For all the TTC data, track testing should be done to determine correction factors to adjust the data and converge on an accurate model. *

Carson Moller [TIRE THEORY 101] 02/18/2019.

REFERENCES (Read more! I don't know everything)

- Tune to Win - Carroll Smith
- Race Car Vehicle Dynamics - Milliken
- The Science of Vehicle Dynamics - Massimo Guiggiani
- Race Car Engineering - Warren Crowly
- Tire and Vehicle Dynamics - Hans Pacejka (Read something else first)
- FSAE TTC Forums
- Pat Clarke (Pat's Corner)

Shocks Notes

- Viscous friction is preferable to solid-solid friction (coulomb friction) because it increases rather than decreases with sliding velocity. Coulomb friction can also cause the suspension to lock up at small forces, or to "jerk". It should be minimized in a suspension setup.
- To more closely approximate the desired variation of viscous friction with speed, pressure-sensitive valves are incorporated. Friction also varies with temperature, although the sensitivity is not particularly high.
- The conventional answer to damping in cars is twin tube telescopic dampers. They have 4 "chambers":
  - Extension chamber: The volume of fluid the floating piston flows towards as the shock elongates. (3)
  - Compression chamber: The volume the piston flows through as the shock compresses. (2)
  - Foot chamber (Fluid Reservoir): A reservoir of extra fluid that the piston does not pass through. Flow to and from it is controlled by the foot valves. Flow to and from occurs because as the piston slides, the change in volume of the solid piston rod that is within the damper causes a displacement of fluid. (1)
  - Air Reservoir: A gas reservoir (Nitrogen) which is pressurized, and adjacent to the foot chamber. It serves the function of providing the driving force to push fluid from the reservoir back in to the main chambers (once the pressure being exerted by the main piston reduces below the pressure exerted by the gas). It also works to reduce/eliminate cavitation during the damper motion. The added pressure from the gas prevents the fluid from dropping below the vapour pressure. (0)
- The reservoirs can be arranged with everything in one cylindrical section (integrated), or with the fluid and gas reservoirs seperated somewhere on their own (remote).

Integrated

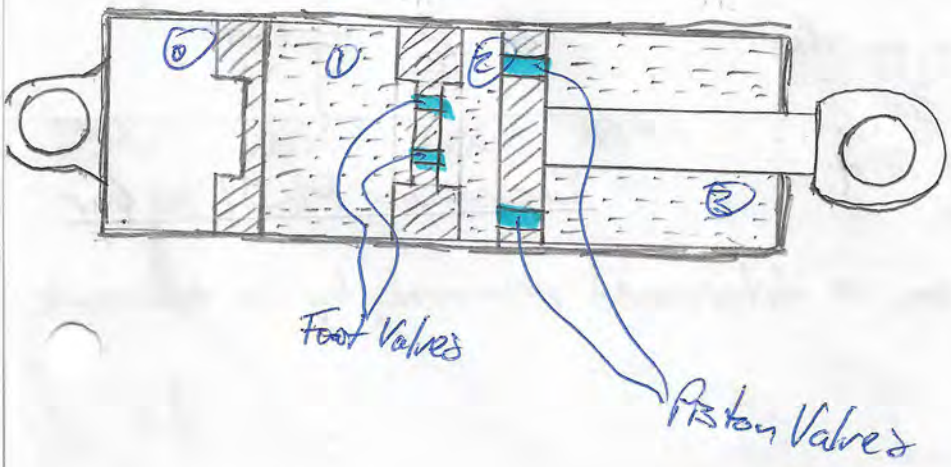

Remote

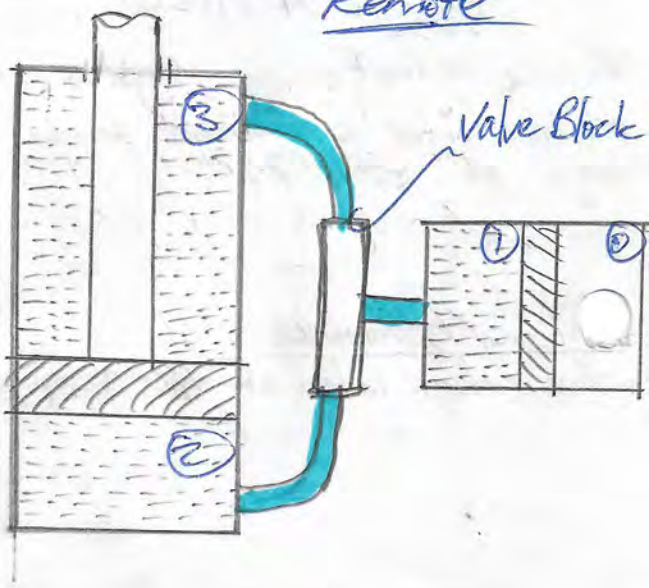

The shocks can be brought into operation by:
- Ride motion because of bumps (macro) or road roughness (micro).
- Pitch motion in acceleration or braking → Anything transient!
- Roll motion in cornering

Motion Ratio

Z_S: bump position relative to standard ride height

Z_D: corresponding damper compression.

Motion Ratio: $R_{D/S} = \frac{\Delta Z_D}{\Delta Z_S}$ change of damper displacement relative to the change in wheel displacement. Changes non-linearly (usually) depending on position, the same way an instant center is only valid at a particular position.

Its a good idea to plot motion ratio with a program if you have an algebraic expression to connect Z_D and Z_S over the range of interest.

What does this mean in the context of the car?

It means that the suspension stiffness of the car is not just a matter of the shock's spring rate, but also how much displacement is applied to the shock for a given suspension motion. (And tire spring rate).

- Its common for race cars to use a rising rate suspension, where motion ratio increases through the course of a bump. Achieving this motion ratio change through suspension geometry is generally much easier than making non linear springs or dampers.
- Actual behaviour of the system may deviate from that of the model because of compliance in the links and the chassis (to a lesser degree).
- Link compliance should be accounted for in the model as shown.
- Because the links and shocks connect the sprung to unsprung mass, they are considered to contribute half of their weight to each.

→ $F_D = C_1 V_D$ linear damper

→ $R_D = \frac{V_D}{V_S}$ → equivalent to earlier

→ $F_{WHEEL} = R_D F_D$

- Motion ratio is commonly somewhere in the range of ≈ 0.7.

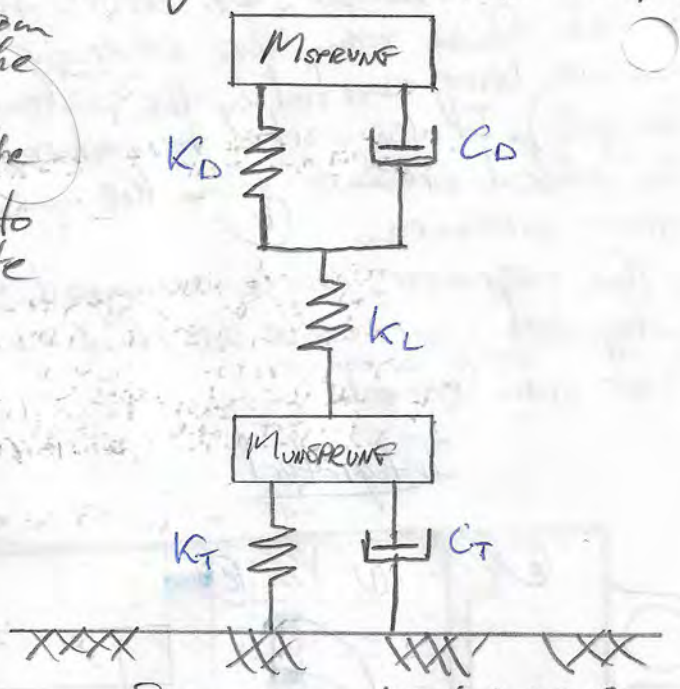

Suspension Model 1/4 Car

Rockers/Bellcranks

- The motion ratio of the suspension is determined primarily by the bellcrank.

Damping Notes - From RCVD

12/22/2018.

- Setting damping rates involves a compromise between ride and "road holding", racing obviously biased towards road holding
- The vertical acceleration of the sprung mass depends on the ride frequency (ω of forced vibration) and the ζ of the system in relation to critical damping.
- Force inputs due to unevenness in the road can be thought of as a combination of sin inputs, where amplitude and wavelength is proportional. This idealization is made mathematically by setting the peak velocity of each signal as equal to eachother.

- The pitching behaviour of the car is influenced by the damping, the time delay between the front and rear of the car in hitting a bump (velocity dependent) and the frequencies and amplitudes of vibration. The greather the relative displacement across given times, the more pitching.
- Best road holding is achieved when the relative motion of the car to the road surface is minimized (TR of 1).

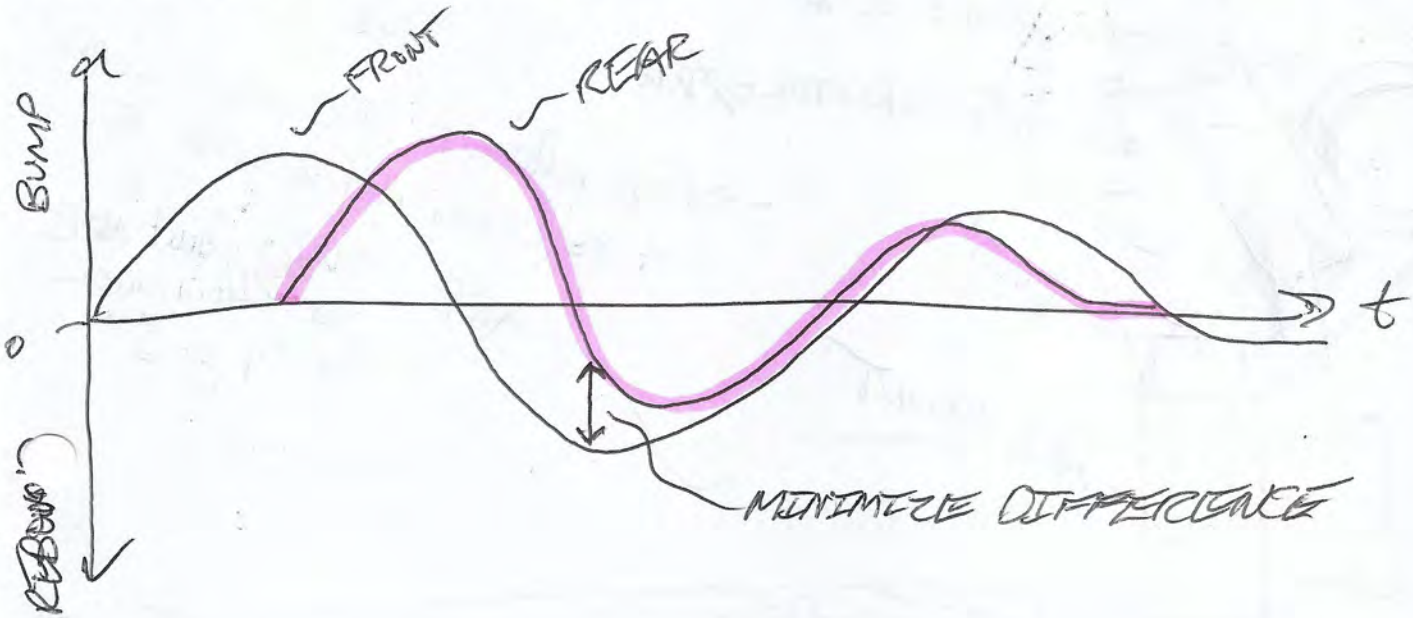

2018 Steering Bolt hole difference = 33.3 mm **Steering**

2019 Difference = 37.7 mm ✓

Lower dist. from mount hole to inside of attachment tube: ≥ 32 mm

~~Usable~~ Usable length for cutouts = 11.2 + 39.8 = 51 mm

3 sections, two spaces inbetween of 5 mm

$$\frac{51 - 5(2)}{3} = 13.6 \longrightarrow \text{Use } 13.5 \text{ mm as } L$$

W of 10 mm

2.3 Front Bellcrank

3 + 10.42 − 11 = 2.42

Pullrod Angle from horizontal = 49.33°

Force magnitude = 4500 N = $\sqrt{F_x^2 + F_y^2 + F_z^2}$

Force angle = 30.67°

$F_x = 4500 \cos(30.67) = 3871$ N

$F_y = 4500 \sin(30.67) = 2295$ N

$F_z = 4500 \sin(10) = 781$ N

The resultant of these two will be 4500 because of the way I did it, so scale the 3 down some.

$F_x = 3800$ N → X

$F_y = 2250$ N → Y

$F_z = 700$ N → Z

Up 33, over 9.1

Front ARB

Minimum acceptable ground clearance = 40 mm

Current Clearance = 37.7 mm ✓

→ Have to make up the difference between ARB mount and bottom of floor is the only issue.

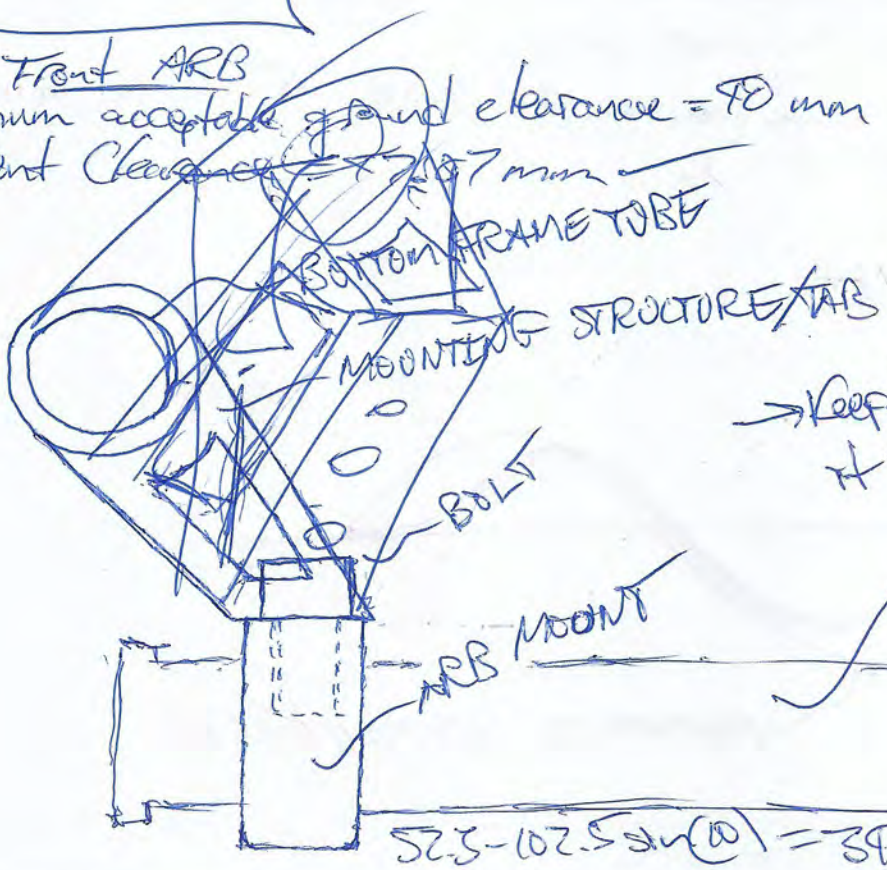

→ Keep bellcrank ARB point where it is, better not to raise it

→ What about ARB twist? How low can the top go?

52.5 − 102.5 sin(10) = 34.5 mm at 10° max twist. To low!

Ride Frequency Calculations 09/11/2018.

(Sprung Mass Resonant Frequency)

$$\omega_n = \frac{1}{2\pi}\sqrt{\frac{\frac{K_W K_T}{K_W + K_T}}{M_S}}$$

where,
K_W = wheel rate
K_T = tire rate
M_S = sprung mass

$$K_W = \frac{K_c}{R_D^2}$$

where,
K_c = coil rate
R_D = Motion ratio c/w

Set K_c as: $400\ lb/in \times \frac{4.448}{25.4} = 70\ N/mm$

Set ratio as: 0.9 (simplify as constant)

$$K_W = \frac{70\ N/mm}{(0.9)^2} = 86.42\ N/mm$$

K_T calculation (Hoosier R25B 20.5-7.0x13)

F_z @ 25.5 cm = -1100 N

F_z @ 25.9 cm = -675 N

so dif of 4 mm, $\frac{1100-675}{4} = 106\ N/mm$

$K_T = 106\ N/mm$ curve is quite linear.

M_S calculation:

1/4 car model, assume total unsprung is 120 lbs, evenly distributed

⇒ assume total sprung is (450 − 120) + 160 = 490 lbs, evenly distributed

so set $M_S = \frac{122.5\ lbs}{2.21\ lbs/kg} = 55.4\ kg$

$$\omega_n = \frac{1}{2\pi}\sqrt{\frac{\frac{(86.4)(106)}{86.4+106}}{55.4}} = 0.14\ Hz$$ → Can't be right

Ride Frequency Calculations 09/11/2018.

$K_W = 86.4\ N/mm$ | $K_T = 106\ N/mm$ | $M_S = 55.4\ kg$

$K_W = \cancel{0.0864\ N/mm}\ 86400\ N/m$

$K_T = 106000\ N/m$

$M_S = 55.4$

$$\omega_n = \frac{1}{2\pi}\sqrt{\frac{\frac{K_W K_T}{K_W + K_T}}{M_S}} = \left[\frac{\frac{(86400)(106000)}{192400}}{55.4}\right]^{1/2} \frac{1}{2\pi}$$

$\omega_n = 4.66\ Hz$ → Still looks high, but more realistic.

* How accurate is this?

Sprung mass changes with weight transfer, downforce, ~~or by adjusting static distribution~~

Tire spring rate ~~changes in~~ is relatively constant

Wheel spring rate changes with the motion ratio curve.

Cane Creek TTX-25

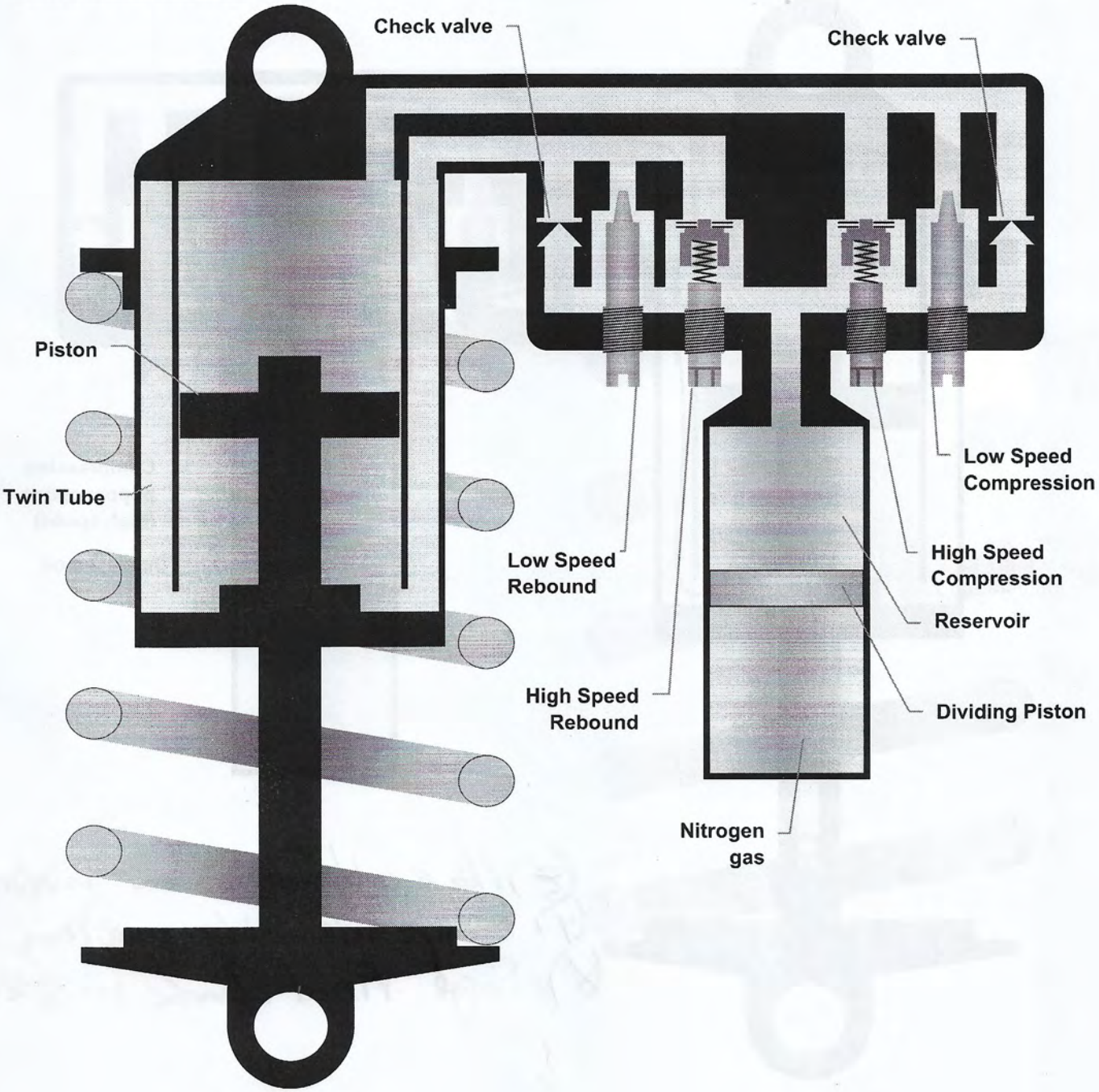

High Speed Compression Stroke

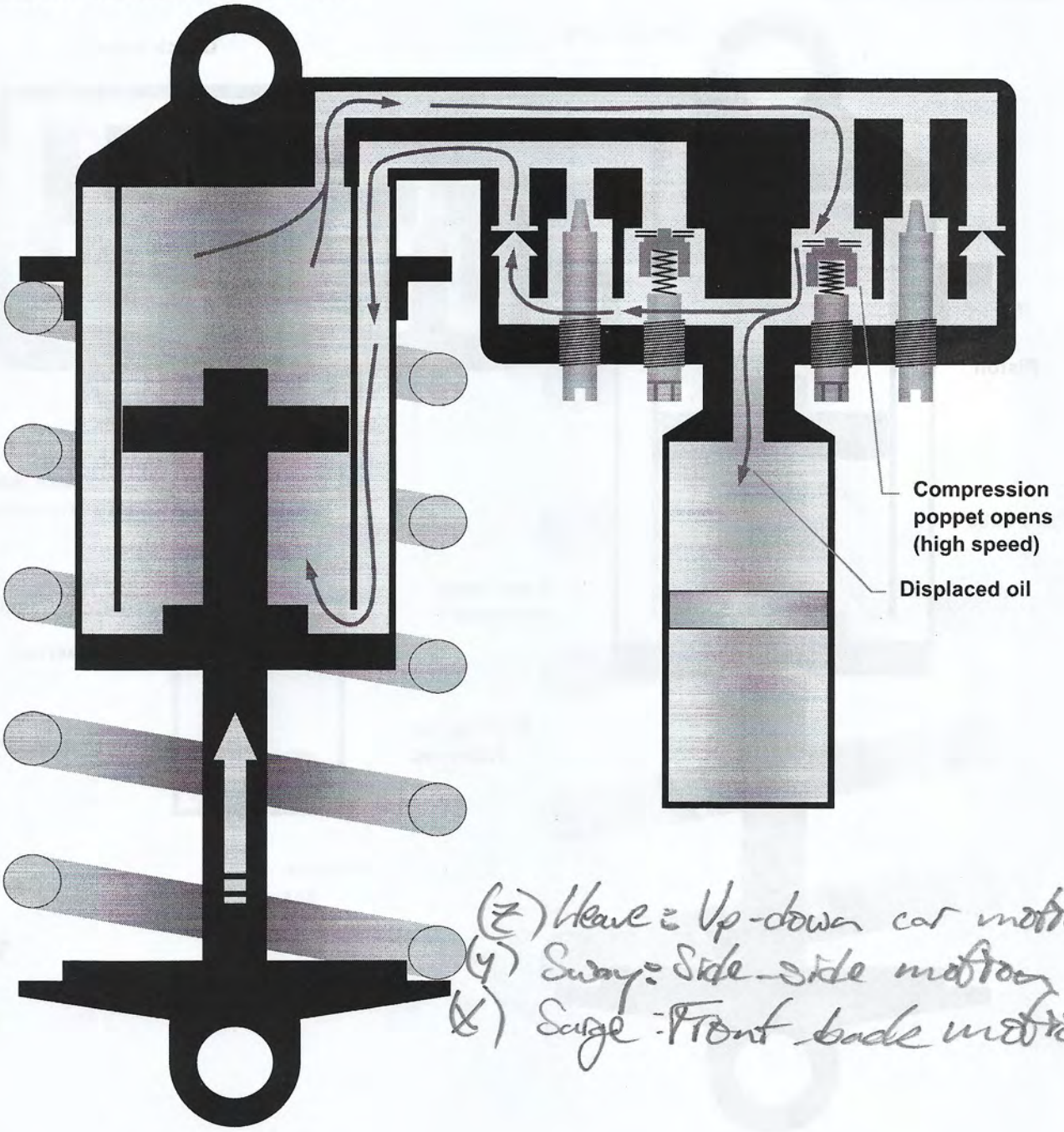

(Z) Heave: Up-down car motion
(Y) Sway: Side-side motion.
(X) Surge: Front-back motion.

PK♥♦¶®wGm: ⌠≡‖♥"♣nfo.vbeMT∩ÖÜH►╝»ⁿ‡z⌠ë«└┴↕J▒RЖ:♦♥*s→dQÄ¼ĝm

Low Speed Compression Stroke

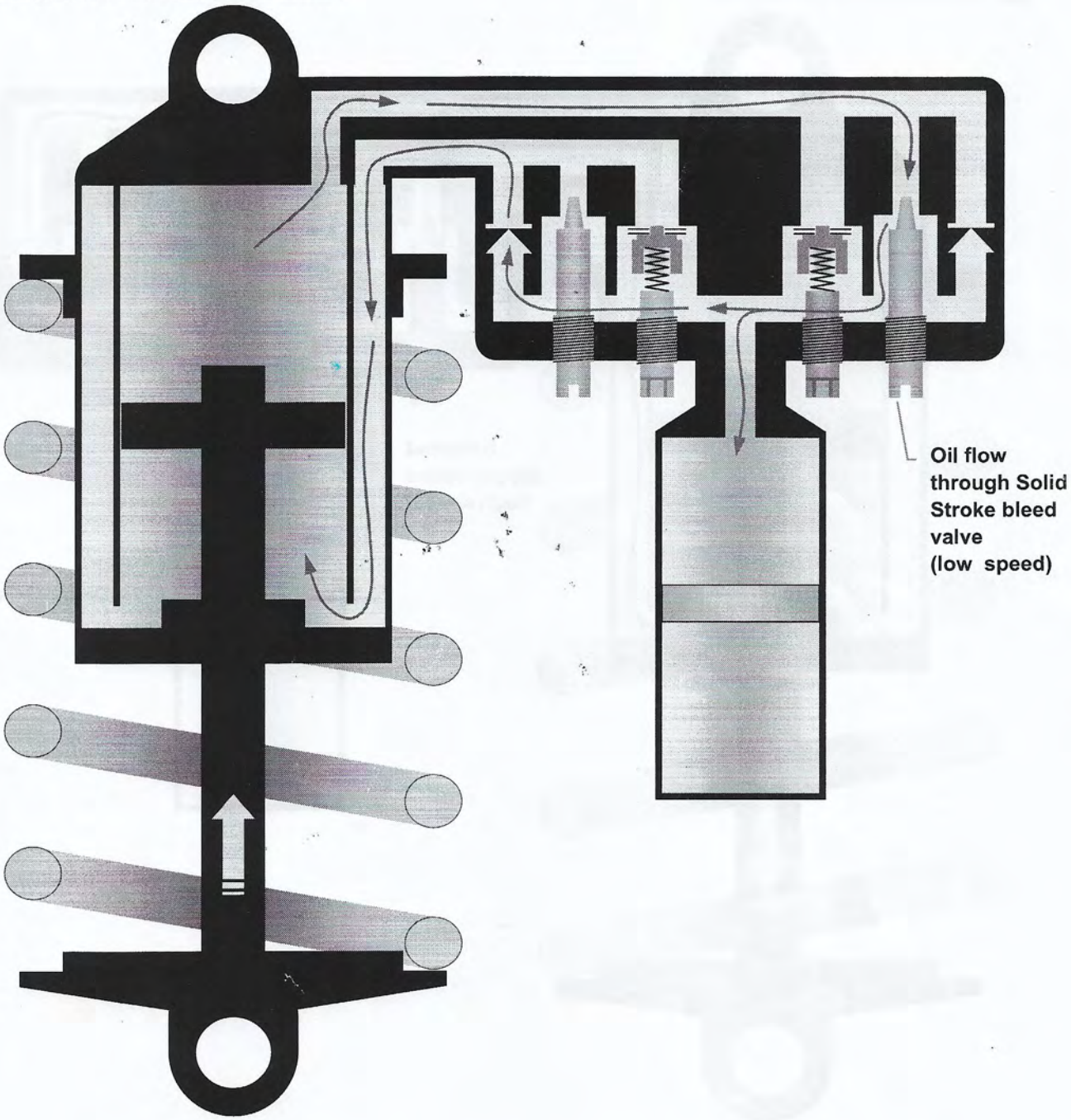

High Speed Rebound Stroke

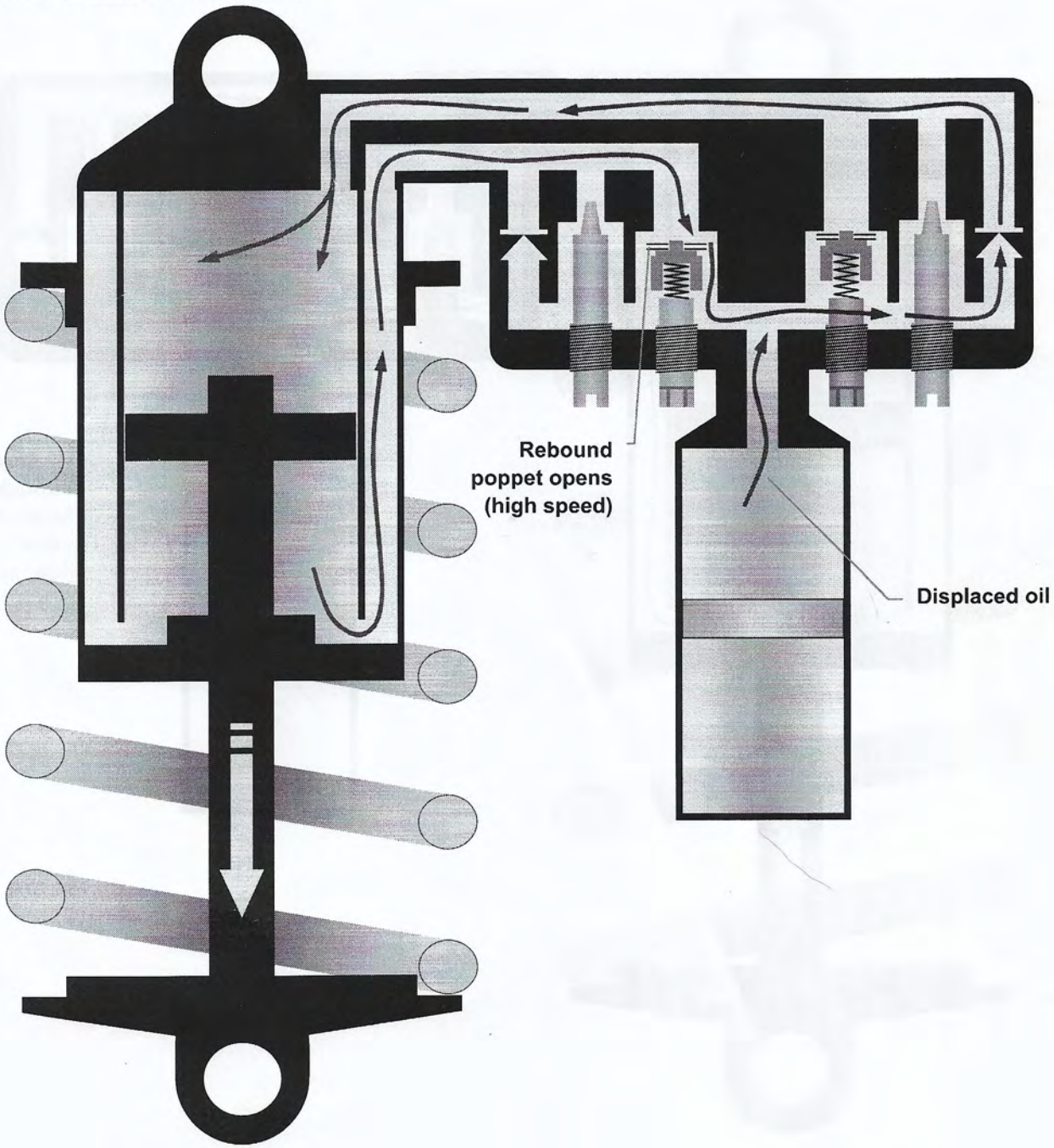

ïE¶╟D$♦.`AëD$àΦ∩ ë♦$

Low Speed Rebound Stroke

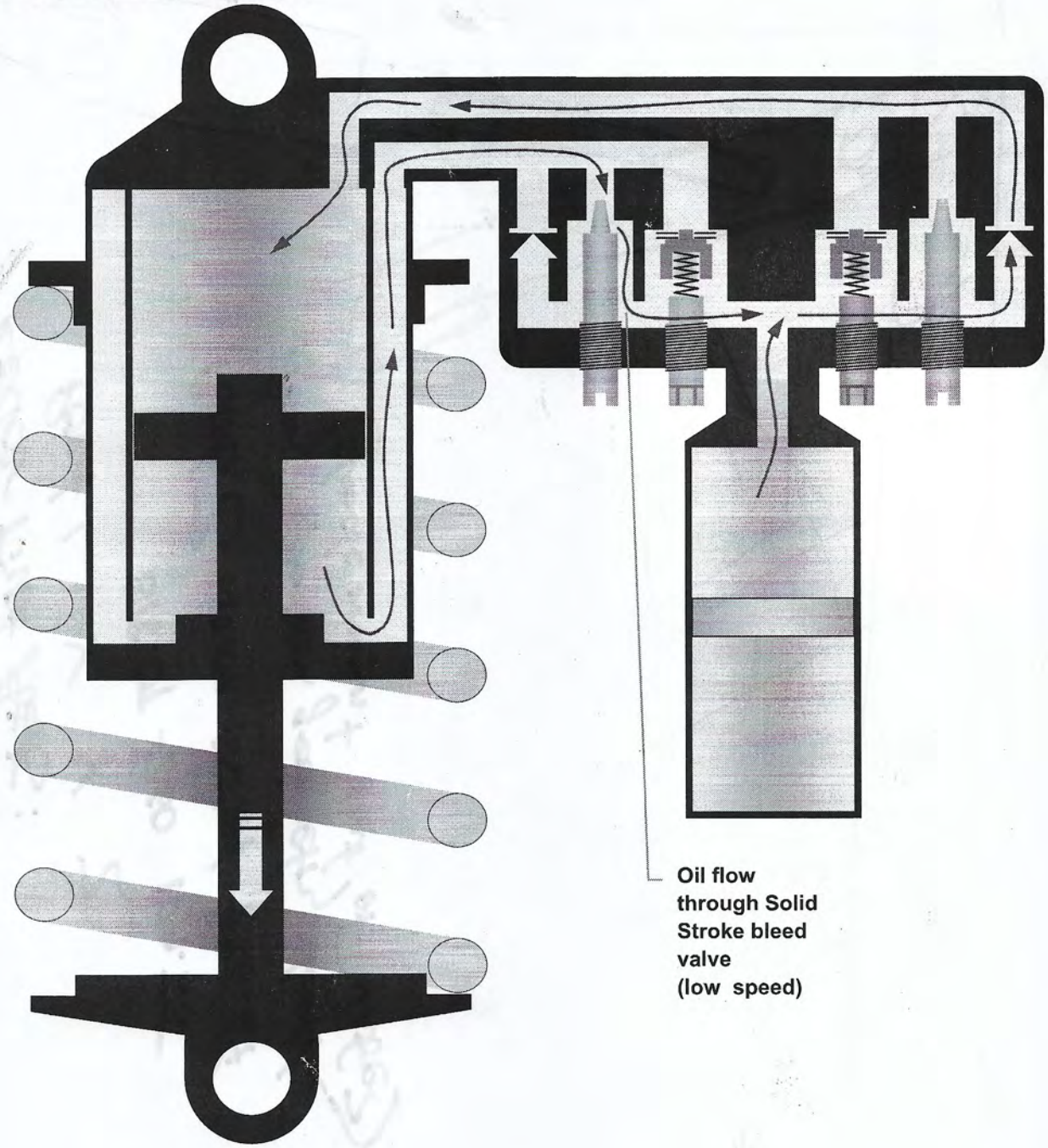

LESOFT Lotus Suspension 5.03
Academic License

FRONT

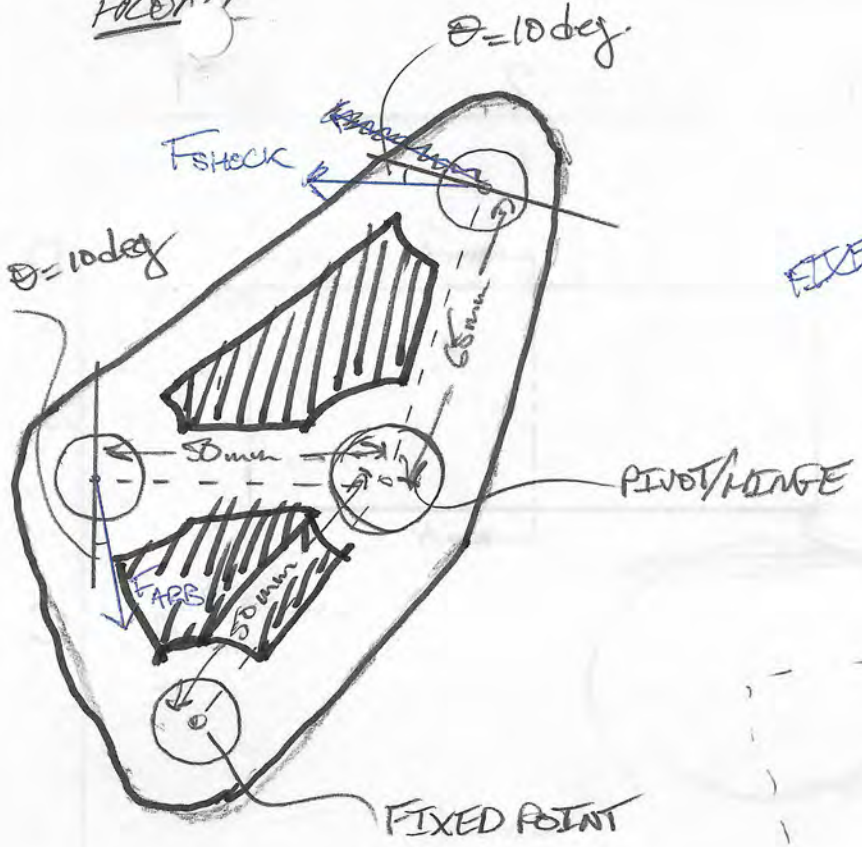

REAR

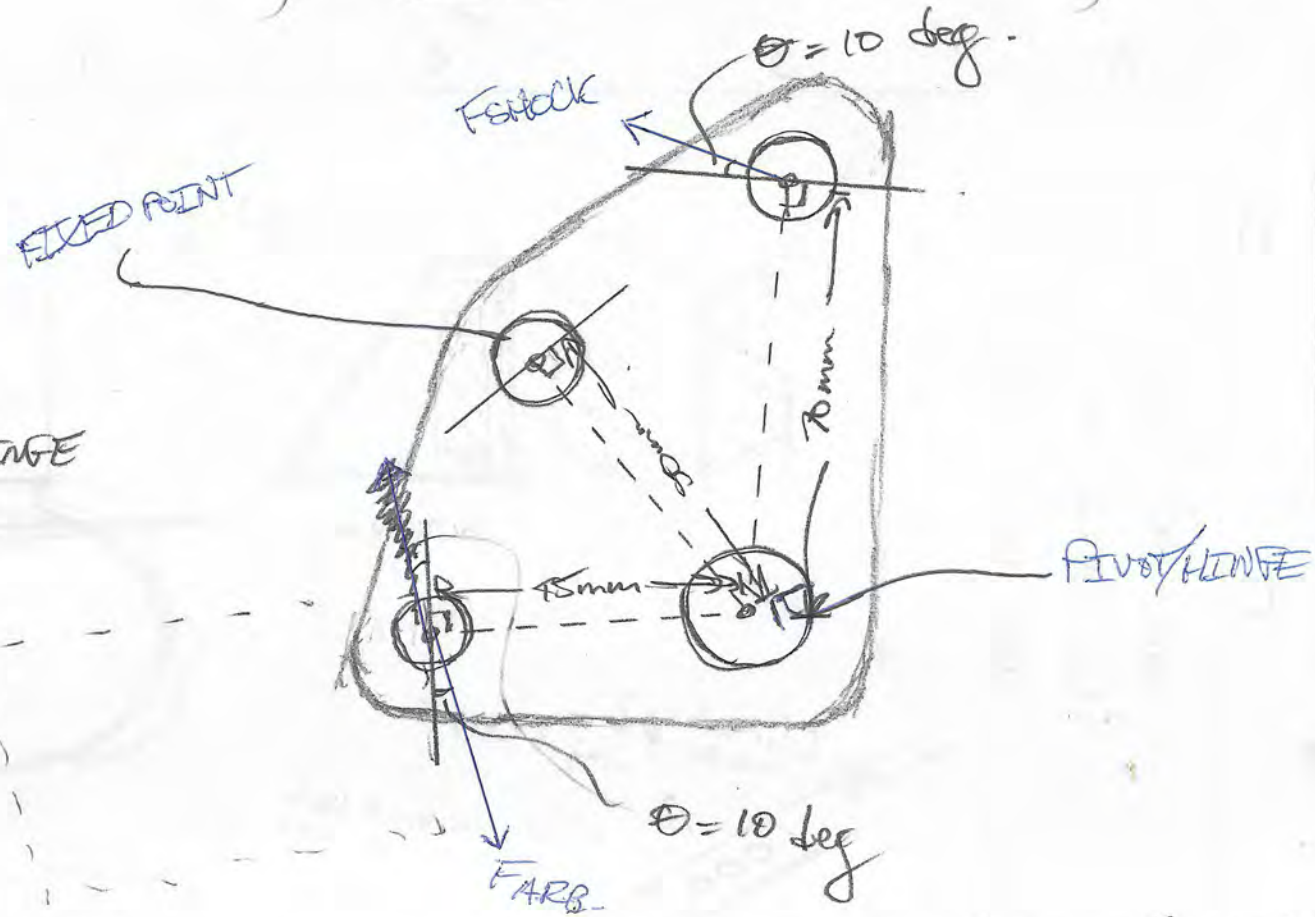

$$225\ N.m = F_{ARB}\left[4.4(0.05) + (0.065)\right]$$

$$F_{ARB} = \frac{225\ N.m}{0.285\ m} = 789.50\ N$$

$$F_{SHOCK} = (789.5\ N)(4.4)$$

$$F_{SHOCK} = 3473.76\ N$$

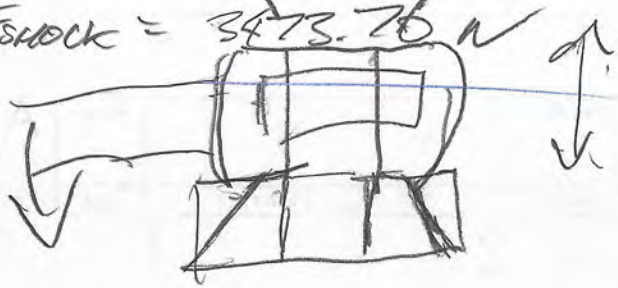

$$\sum M_{PIVOT} = 0 = (-4500\ N)(0.05\ m) + F_{SHOCK}(0.07\ m) + F_{ARB}(0.045\ m)$$

$$\rightarrow F_{SHOCK} = 4.4\ F_{ARB}$$

$$\rightarrow \sum M_{PIVOT} = 0 = -225\ N.m + 4.4 F_{ARB}(0.07\ m) + F_{ARB}(0.045\ m)$$

$$\rightarrow 225\ N.m = F_{ARB}\left[4.4(0.07\ m) + (0.045\ m)\right]$$

$$\rightarrow F_{ARB} = \frac{225\ N.m}{0.353\ m} = 637.40\ N$$

$$\rightarrow F_{SHOCK} = (637.40\ N)(4.4) = 2804.5\ N$$

2019 FRONT BELLCRANK

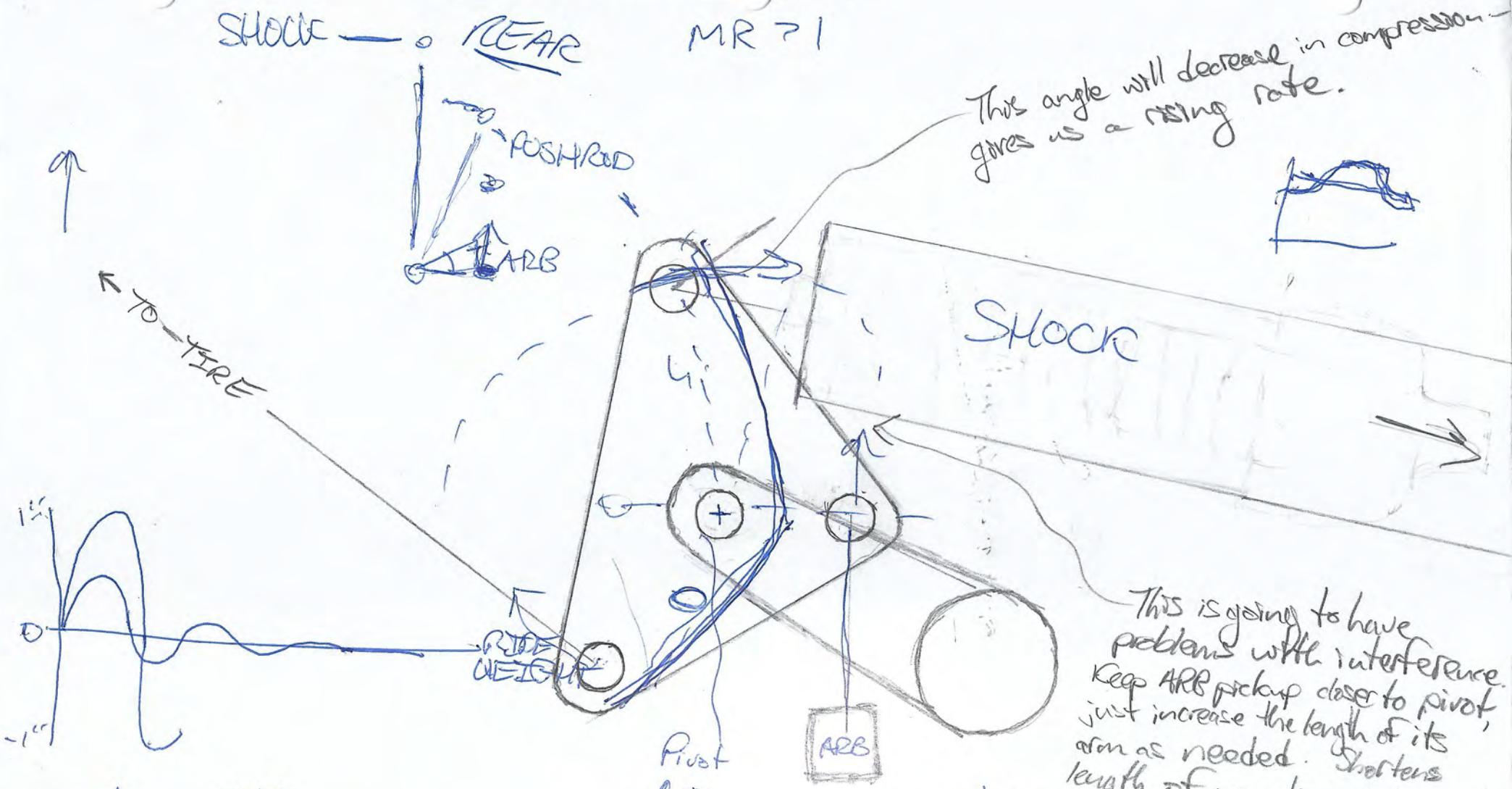

This angle will decrease in compression — gives us a rising rate.

This is going to have problems with interference. Keep ARB pickup closer to pivot, just increase the length of its arm as needed. Shortens length of mounting tabs as well.

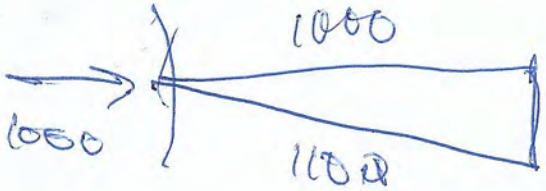

MR	K
4 =	0.8 × 5
4 =	2 × 2

cf

$F = kx$

Rear bellcrank rotates 19° for 1" wheel up.

Half Shaft to Pushrod Clearance = 29.50 mm − 8mm − 9.5mm = 12mm

FRONT BELLCRANK

- ARB-Shock: 72.7515 deg
- Shock-Pullrod: 156.5754 deg
- Pullrod-ARB: 130.6730 deg

Pivot-ARB Length: 35 mm
Pivot-Pullrod Length: 50 mm
Pivot-Shock Length: 65 mm

REAR BELLCRANK

Pushrod-~~Shock~~ ARB: 47.3181 deg
ARB-Shock: 267.0556 deg
Pushrod-Shock: 45.6264 deg

Pivot-ARB Length: 37.50 mm
Pivot-Pushrod Length: 50 mm
Pivot-Shock Length: 65 mm

Pushrod Length: 265.22 mm
Max Bellcrank Rotation: 19.22 deg

~~SRA~~ 3500 FSHOCK
800 FARB

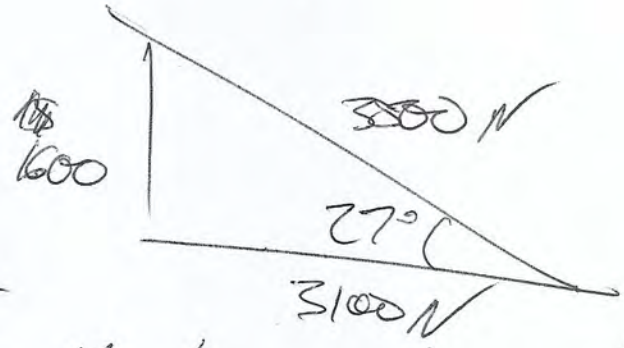

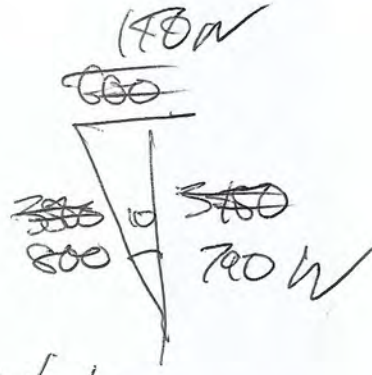

Front Shock Clearance -
Can go 11.27 mm from the line connecting pivot point to shock point. Go with a for factor of safety. Measure from 34 mm up from pivot point

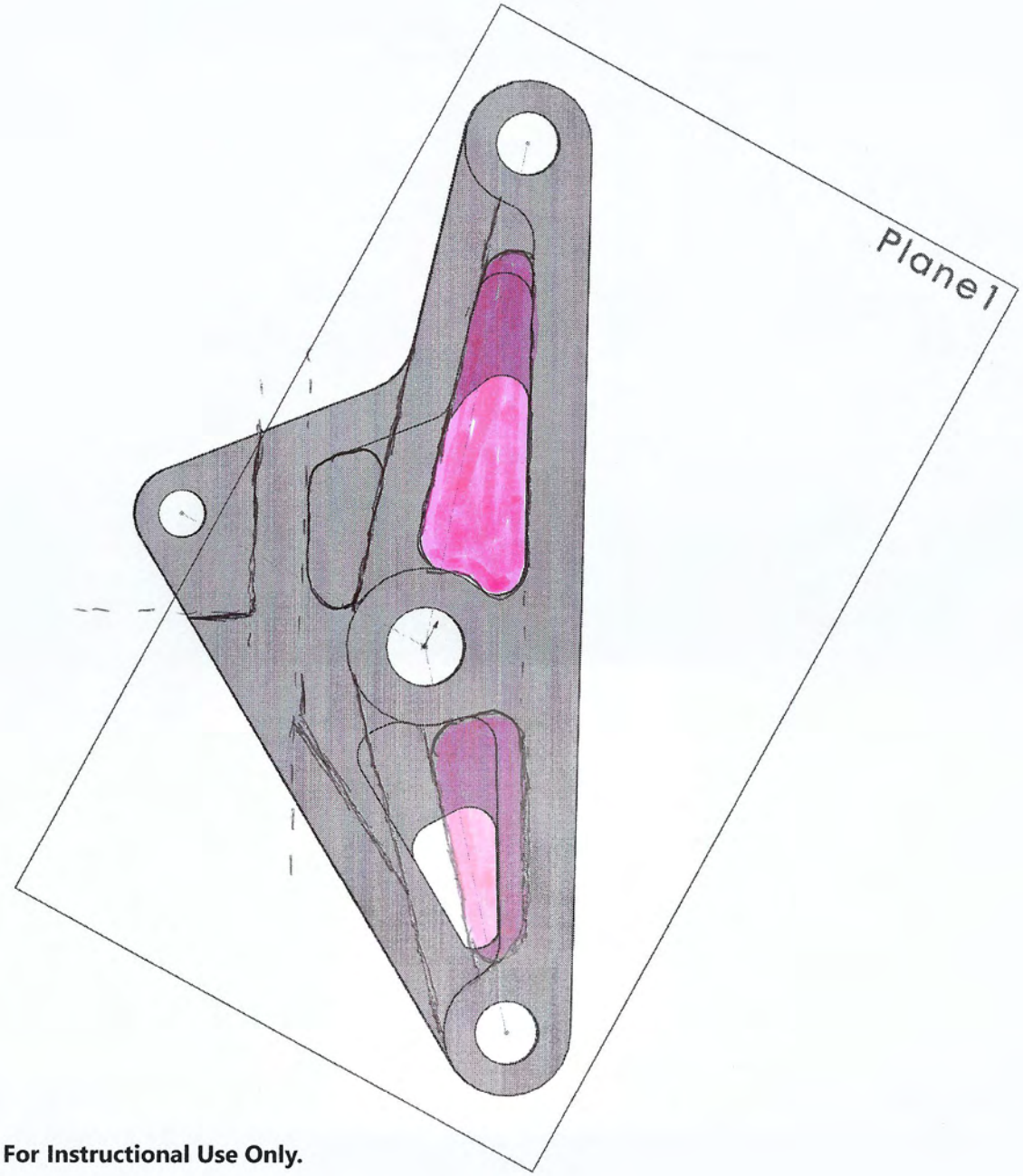

SOLIDWORKS Educational Product. For Instructional Use Only.

Pulled force = 4500 N — assume an angle of 40° to horizontal

Shock force: Assume horizontal

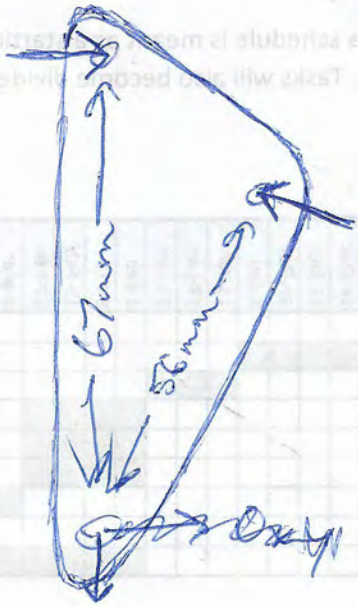

$F_2 L_2 = F_1 L_1$

$(4500\ N)(0.067\ m) = F_1 (0.056\ m)$

$\rightarrow F_1 = 5389\ N$

$\Sigma F_y = 4500\ N \sin(40) - O_y$

$\rightarrow O_y = 2892\ N$

~~∴ Assume bearing reaction of 5500 N~~

$O_x = 2892 - 4500\cos 40$

$O_x = 555\ N$

$O = \sqrt{O_x^2 + O_y^2} = 2944\ N$

∴ Assume bearing reaction of 3000 N

3000 N

$D = 8\ mm$

$\frac{\pi D}{2} = 12.56 \times 25\ mm$

$300\ mm^2$

$\frac{3000\ N}{300(10)^{-6}\ m^2} = 10\ MPa$

$\rightarrow 10000\ kPa = 1450\ PSI$

Bearing pressure due to radial load

Bearings

- IGUS G500 8x10x25 x4 – Bellcranks
- G500 15x17x12 x4 – Rollcars

Bearings Canada BA107 – Steering Column

Tech Tip: Springs & Dampers, Part Two

Attack of the Units

By Matt Giaraffa
matt.giaraffa@optimumg.com

After understanding last month's tech tip, you know how to pick ride frequencies for your racecar, and calculate the spring rate needed for the chose frequency. Now, what do you do about the anti-roll bars.

But first, we have had a couple emails asking about units and frequency calculations, so that will be explained further, and then we will explore how to develop baseline spring rates for anti-roll bars (ARB's).

If you don't watch your units, you can't have any pudding.

When calculating any parameters on the car, you must be sure the units are correct. Just because your physics teacher is not overseeing your calculations does not mean you can slack on the units.

One of the biggest mistakes people make is confusing weight and mass. Weight is a force, mass is an inertia- do not forget that. Once you have decided on a ride frequency and want to figure out what spring rate you need units errors will put you far off target. An example is shown below where weight is used in place of mass.

Equation for calculating spring rate:

$$K_s = 4\pi^2 f_r^2 m_{sm} MR^2$$

K_s = Spring rate (N/m)
m_{sm} = Sprung mass (kg)
f_r = Ride frequency (Hz)
MR = Motion ratio (Wheel/Spring travel)

<u>SI Correct example:</u>
m_{sm} = 200 kg f_r = 2 Hz MR = 1.25

$K_s = 4\pi^2(2\text{ Hz})^2(200\text{ kg})(1.25)^2 = 49348\text{ N/m} = 49.3\text{ N/mm}$

<u>SI Incorrect example:</u>
m_{sm} = 1960 N f_r = 2 Hz MR = 1.25

$K_s = 4\pi^2(2\text{ Hz})^2(1960\text{ N})(1.25)^2 = 483611\text{ N/s}^2$ = Wrong and not useful

<u>English Correct example:</u>
m_{sm} = 440 lbm f_r = 2 Hz MR = 1.25

$K_s = 4\pi^2(2\text{ Hz})^2/386.4*(440\text{ lbm})(1.25)^2 = 282\text{ lbf/in}$

<u>English Incorrect example:</u>
m_{sm} = 440 lbf f_r = 2 Hz MR = 1.25

$K_s = 4\pi^2(2\text{ Hz})^2(440\text{ lbf})(1.25)^2 = 108566\text{ lbf/s}^2$ = Wrong and not useful

As you can see, with incorrect units, the results you get are useless. Be careful to use weight/force when needed and use mass when needed- the two are not interchangeable.

Roll

Similar to choosing ride frequencies for bump travel, a roll stiffness must be chosen next. The normalized roll stiffness number is the roll gradient, expressed in degrees of body roll per "g" of lateral acceleration. A lower roll gradient produces less body roll per degree of body roll, resulting in a stiffer vehicle in roll. Typical values are listed below:

- 0.2 – 0.7 deg/g for stiff higher downforce cars
- 1.0 – 1.8 deg/g for low downforce sedans

A stiffer roll gradient will produce a car that is faster responding in transient conditions, but at the expense of mechanical grip over bumps in a corner.

Once a roll gradient has been chosen, the roll gradient of the springs should be calculated, the anti-roll bar stiffness is used to increase the roll gradient to the chosen value. The roll gradient is usually not shared equally by the front and rear. At OptimumG, we call the roll gradient distribution the Magic Number (Milliken calls it Total Lateral Load Transfer Distribution). The Magic Number is expressed as the percentage of the roll gradient taken by the front suspension of the car.

As a baseline, use 5% higher Magic Number than the static front weight distribution.
Roll gradients are degrees of body roll per g of lateral acceleration.
Roll rates are Newton-meters of torque per degree of body roll or ARB twist. The following equations do no take into account roll due to the tires.

<u>Roll gradient of ride springs:</u>

$$\frac{\phi_r}{A_y} = \frac{-W \times H}{K_{\phi F} + K_{\phi R}}$$

H = Cg to Roll axis dist (m)
W = Vehicle weight (N)
ϕ_r/A_y = Roll gradient from ride springs (deg/g)

$$K_{\phi F} = \frac{\pi (t_f^2) K_{LF} K_{RF}}{180(K_{LF}+K_{RF})}$$

$K_{\phi F}$ = Front roll rate (Nm/deg roll)
t_f = Front track width (m)
K_{LF} = LF Wheel rate (N/m)
K_{RF} = RF Wheel rate (N/m)

Remember that wheel rate is spring rate/ MR^2 ; the effect of the spring at the wheel

$$K_{\phi R} = \frac{\pi (t_r^2) K_{LR} K_{RR}}{180(K_{LR}+K_{RR})}$$

$K_{\phi R}$ = Rear roll rate (Nm/deg roll)
t_r = Rear track width (m)
K_{LR} = LR Wheel rate (N/m)
K_{RR} = RR Wheel rate (N/m)

Total ARB roll rate needed to increase the roll stiffness of the vehicle to the desired roll gradient:

$$K_{\phi A} = \frac{\pi}{180}\left[\frac{K_{\phi DES}K_T(t^2/2)}{[K_T(t^2/2)\pi/180 - K_{\phi DES}]}\right] - \frac{\pi K_W(t^2/2)}{180}$$

$K_{\phi A}$ = Total ARB roll rate needed (Nm/deg roll)
$K_{\phi DES}$ = Desired total roll rate (Nm/deg roll)
K_W = Wheel rate (N/m)
K_T = Tire rate (N/m)
t = Average track width between front and rear (m)

$$K_{\phi DES} = WH/(\phi/A_y)$$

W = Weight of vehicle (N)
H = Vertical distance from roll center axis to Cg (m)
ϕ/A_y = Desired total roll gradient, chosen earlier (deg/g)

Front and Rear Anti-Roll Bar stiffness:

$$K_{\phi FA} = K_{\phi A}N_{mag}MR_{FA}^2/100$$

$K_{\phi FA}$ = FARB roll rate (Nm/deg twist)
$K_{\phi A}$ = Total roll rate (Nm/deg roll)
N_{mag} = Magic Number (%)
MR_{FA} = FARB Motion ratio

$$K_{\phi RA} = K_{\phi A}(100-N_{mag})MR_{RA}^2/100$$

$K_{\phi RA}$ = RARB roll rate (Nm/deg twist)
$K_{\phi A}$ = Total roll rate (Nm/deg roll)
N_{mag} = Magic Number (%)
MR_{RA} = RARB Motion ratio

Remember, the chassis acts as a torsional spring in roll. It is worth comparing the roll rate of your suspension to the roll rate of your chassis- if the chassis twists as much as the suspension, it could be a larger area of concern than the suspension. With steady state roll angles different front to rear, or different roll frequencies front to rear, chassis torsion will be induced- this should be kept in mind.

Try this on an excel spreadsheet and have fun. Email us for comment and questions.

Next time we will speak about the *3rd spring* and introduce damping.

SUSPENSION GOALS:

- Minimal necessary wheelbase and track.
- Major decrease in unsprung mass.
- Reduce out of plane suspension forces on bellcranks
- Stronger shock mounting
- Anti-roll bars: Allows fine tuning of roll stiffness, higher stiffness than possible without them
- Softer shocks: More suitable ride response, Made possible by adding anti-roll bars
- Design a-arms with suitable camber response that is well understood. Try to keep scrub low.
- Decrease steering effort by 25-50%.
- Max steering angle of 25 deg.
- Suitable ackermann progression
- Validate as much as possible. Understand the car.

129.67

Shift pullrod A-arm pickup backwards 10 mm

Shock

y = 126.7

x = -[29 + 129.67] = -158.67

Pullrod Outboard

y = 266.4

x = -487.8

Pivot

y = 115

x = 252

ROLLBAR STIFFNESS CALCS

$$\frac{\phi_r}{A_y} = \frac{-W(H)}{K_{\phi F} + K_{\phi r}}$$

$$g = \frac{m/s^2}{m/s^2}$$

$$kg^1 m^1 s^{-2} deg^{-1}$$

$$MR^2 = \frac{\text{Spring Rate}}{\text{Wheel Rate}}$$

$$MR^2 = \frac{1}{1.8}$$

$$\rightarrow MR = 0.87$$

$$0.8\ deg/g = \frac{(2400N)(0.280 - 0.06m)}{K_{\phi F} + K_{\phi R}}$$

$$\rightarrow K_{\phi F} + K_{\phi R} = \frac{528\ Nm}{0.8\ deg/g} = 660$$

$$\rightarrow K_{\phi F} = 660(0.55) = 360\ N.m/deg$$

$$\rightarrow K_{\phi R} = 660(0.45) = 300\ N.m/deg$$

Tire Rates:

10 PSI = 652 lbs/inch

12 PSI = 724 lbs/inch

14 PSI = 755 lbs/inch

$\rightarrow$ Use 12 PSI

$$\frac{724\ lb}{inch}\left[\frac{1\ kg}{2.21\ lb}\right]\left[\frac{100\ m}{2.54\ inch}\right]$$

$$K_{\phi F} = 360 = \frac{\pi(0.594m)^2}{180}\frac{K_{LF}K_{RF}}{K_{LF}+K_{RF}} = 6.15(10)^{-3}\left[\frac{K_{LF}K_{RF}}{K_{LF}+K_{RF}}\right]$$

$$\frac{360}{0.00615} = 58536.58 = \frac{K_{LF}K_{RF}}{K_{LF}+K_{RF}}$$

$$K_T = 12897.7\ N/m$$

$$W_{\phi DES} = \left[\frac{(2400N)(0.22m)}{0.8\ deg/g}\right] = 660\ N.m/deg$$

$$t = \frac{1.286 + 1.188}{2} = 1.212\ m$$

Assume 800 lbs/inch

$$K_w = \frac{70000\ N/m}{0.772} = 118863\ N/m$$

$$K_w = \frac{5897}{0.5929} = 9913\ N/m$$

$$K_{\phi A} = \frac{\pi}{180}\left[\frac{K_{\phi DES}K_T(t^2/2)}{K_T(t^2/2)\frac{\pi}{180} - K_{\phi DES}}\right] - \frac{\pi K_w(t^2/2)}{180}$$

$$K_{\phi A} = \frac{\pi}{180}\left[\frac{(660\ N.m/deg)(12897.7\ Nm^{-1})\left(\frac{1.212^2 m}{2}\right)}{(12897.7\ Nm^{-1})\left(\frac{1.212^2 m}{2}\right)\frac{\pi}{180} - (660\ Nm\ deg^{-1})}\right] - \frac{\pi}{180}(12897.7\ Nm^{-1})\left(\frac{1.212^2 m}{2}\right)$$

$$\text{UNITS: } deg^{-1}\left[\frac{N^1 m^1 N^1 m^{-1} m^2}{(N^1 m^{-1} m^2 deg^{-1}) - N^1 m^1 deg^{-1}} - N^1 m^{-1} m^2\right] = K_{\phi A}$$

$$\rightarrow K_{\phi A} = deg^{-1}\left[\frac{N^2 m^2 deg^1}{N^1 m^1 deg^{-1}} - N^1 m^1\right] = N.m/deg$$

$$K_{\phi A} = \frac{\pi}{180}\left[\frac{6.752(10)^6\ N.m}{|165 - 660|} - 165\ N.m\right] = \frac{\pi}{180}\left[12650\ N.m - 165\ N.m\right]$$

$$K_{\phi A} = 217.51\ N.m/deg$$

$K_{\phi FA} = K_{\phi A}\left[\frac{N_{mag1}}{100}\right] MR_{FA}^2$

$K_{\phi FA} = 217.51\ N.m/deg\ (0.55) = 119.63\ N.m/deg$

$K_{\phi RA} = 217.51\ N.m/deg\left[\frac{1-N_{mag1}}{100}\right] MR_{RA}^2$

$K_{\phi RA} = 217.51\ (0.45)\left(\frac{1.1}{0.9}\right)^2 = 120.59\ N.m/deg$

Shear Modulus = G = 80 GPa

15.875 mm = OD

t = 0.065" = 1.65 mm

ID = 12.575 mm

⇒ OD = 15 when machined.

1018 STEEL MATERIAL PROPERTIES:

L = 550 mm = 0.55 m

$J = \frac{\pi}{32}\left[d_o^4 - d_i^4\right] = \frac{\pi}{32}\left[0.015^4 - 0.012575^4\right] = \frac{\pi}{32}\left[5.065(10)^{-8} - 2.500(10)^{-8}\right]$

$J = 2.51(10)^{-9}\ m^4$

$K = \frac{T}{\theta}$

$\rightarrow K_{\phi FA} = \boxed{119.63\ N.m/deg} \neq \frac{GJ}{L} = \frac{80(10)^9 Pa\ (2.51(10)^{-9})\ m^4}{0.55\ m} = 365.09\ N.m/deg$

$J_2 = \frac{\pi}{32}\left[0.015^4 - 0.0135^4\right] = 1.91(10)^{-9} m^4$ — much closer to $K_{\phi FA}$.

Rollbar Mount hole spacing = 23.62 mm. So dividing by 2, we can get adjustment increments of 23.62/2 = 11.81 mm!

ARB arm holes distances: Starting at L = 70 mm + x(11.81 mm), 70, 81.81, 93.62, 105.43, 117.24

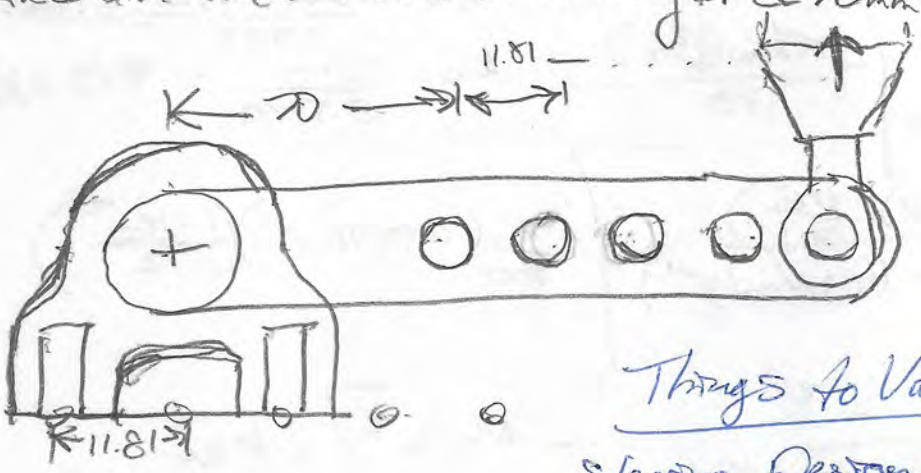

Things to Validate

Steering Design - What yaw do we get for given steer angles at given speeds

$\left[\frac{1.91}{2.51}\right] 365.09 = 277.75\ N.m/deg \rightarrow N/m$

$\frac{277.75\ N.m\ (0.05)}{8.726(10)^{-4}\ m\ deg/m}$

$\rightarrow \frac{277.75\ N\ (0.05)}{8.726(10)^{-4}} = 15915\ N/m$

Shock rate = 70 N/mm = 70000 N/m

Ratio of Force = $\frac{70000}{15915} = 4.40$

Rollbar Stiffnesses

$K_{OFA} = \frac{GJ}{L}$ G = Shear Modulus = $80(10)^9$ Pa

J = Moment of Inertia = $1.91(10)^{-9}$ m⁴ for 0.049" bar

L = ARB length = (249 − 35) = 2 = 418 mm for front

$K_{OFA} = \frac{80(10)^9 \text{ Pa}\,(1.91(10)^{-9}\text{ m}^4)}{0.418\text{ m}} = 365.5$ N·m/deg → Still a lot higher than calculated theoretical.

To get the same roll stiffness at lower ARB motion ratio, you want more stiffness. Also doesn't account for deflection of ARB arms which would soften things further.

ARB motion ratio is determined by:
- Pullrod angle
- Bellcrank ratio
- Roll bar position (pickup point on arm)

Length of rear roll bar is practically the same front to back (422 mm)
→ Same stiffness

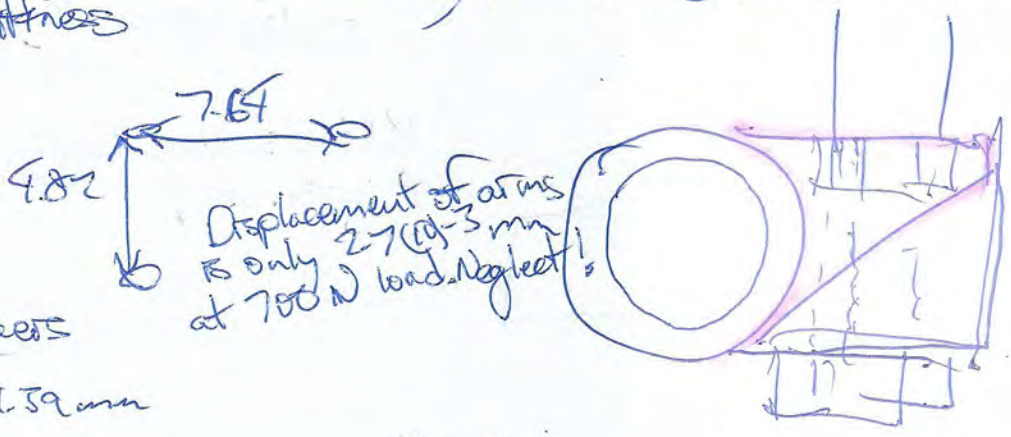

Chain guard drawing @ 111.30 mm

Steering Spacers

11.11 mm → 1.39 mm
12.50 mm

→ Spacer of 1.39 mm. ~~Move the mounts~~ in as close as they can be.

$MR = \frac{5\text{ mm}}{223.39 - 219.19} = 1.19$ — $\frac{\text{Wheel travel}}{\text{Damper travel}}$ [DAMPER MOTION RATIO]

ARB Motion Ratio (linear) = $1.19\left(\frac{55}{65}\right) = 0.64$ — Tires will decrease this!

How much "height difference" do the tires have for 1 deg of roll?

Arg. Track Sin (1) = Combined tire displacement difference

1000 sin(1) = 20.95 mm

(20.95 mm)(0.64) = 6.704 — Arc length at ARB

$l = r\theta \rightarrow \theta = \frac{l}{r} = \frac{6.704\text{ (2)}}{50\text{ mm}} = 0.268$ rad = ~~7.66~~ 6.98 deg/deg body roll

This is in the stiffest position

Shortest Arm length = 55 mm
Longest Arm Length = 102.24 mm

Rear ARB length = 283.26(2) = 566.52 mm (Center to center of pickups)
Front ARB length = 210.33(2) = 420.66 mm → Use these for stiffness calcs.
→ Add 20 to each for distance of pickup to ends of tube.

Rear stiffness relative to front = $\frac{420.66}{566.52}$ = 74.3% as stiff as front.

Should a different diameter tube be used to even this out?
Change the arm lengths instead. Move shortest from 55 to 75mm, 1.22 times more stiff at shortest position now
0.743(1.22) = 0.908 as stiff as front

Center of the spindle is not being properly defined in Adams

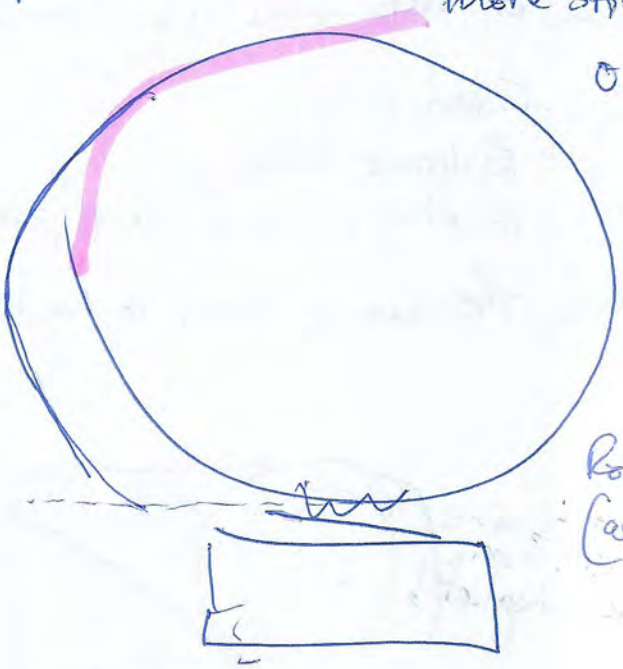

Front Shock Interference: 3mm
Increase distance from tube center from ~~20 to 27~~ 25 to 32.

Roll bar spacing: Every 11.81 mm (adjustment)

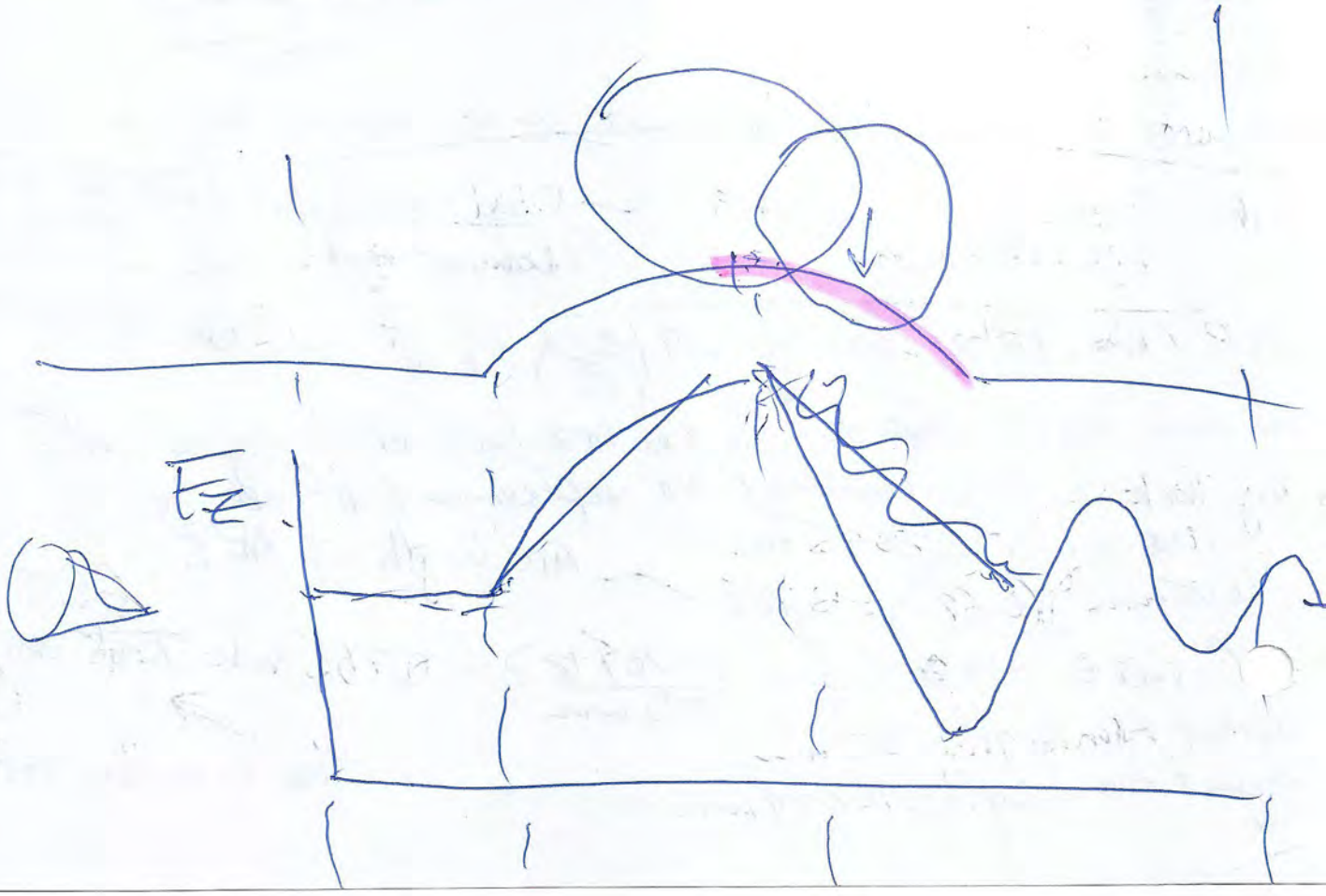

STEERING GEOMETRY

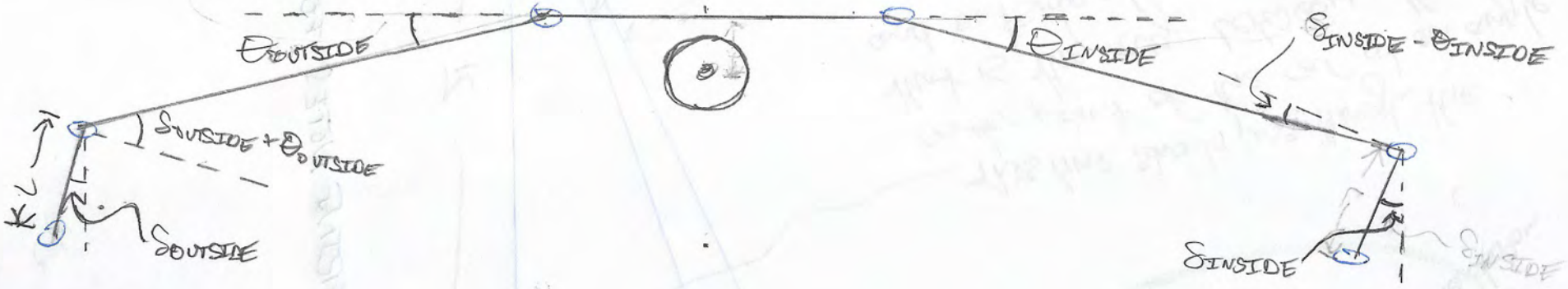

TIRE GEOMETRY

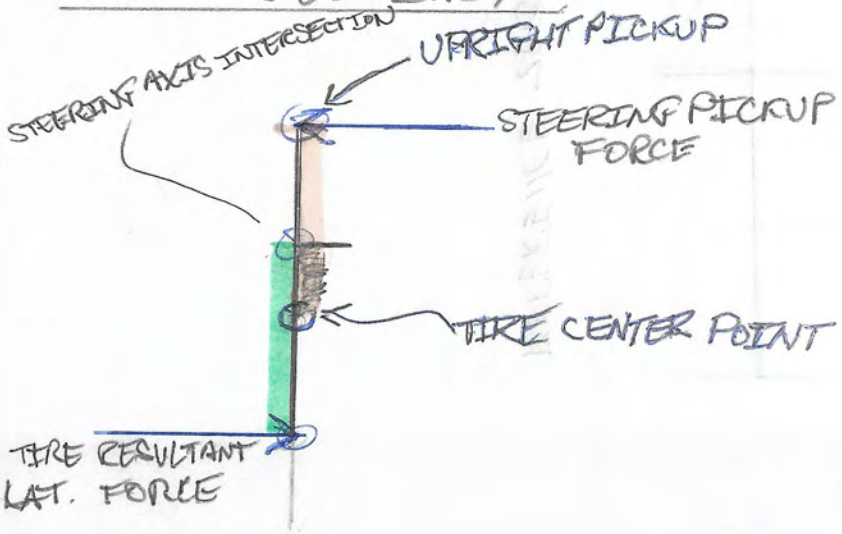

COLUMN GEOMETRY

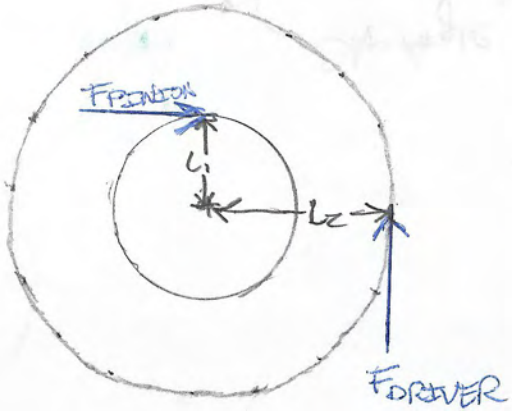

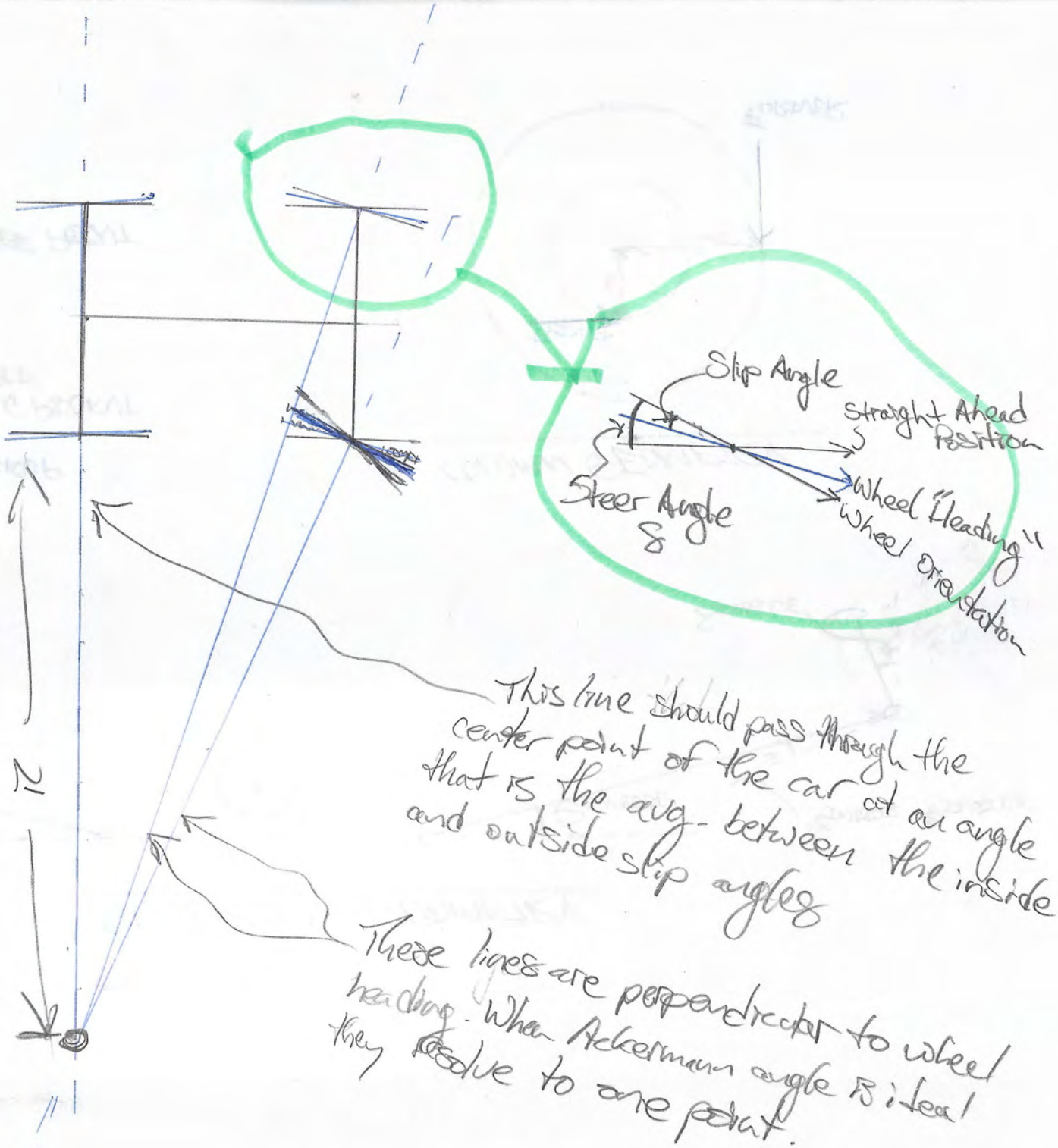

REFERENCE 2018 STEERING NOTES FOR MORE STEERING STUFF

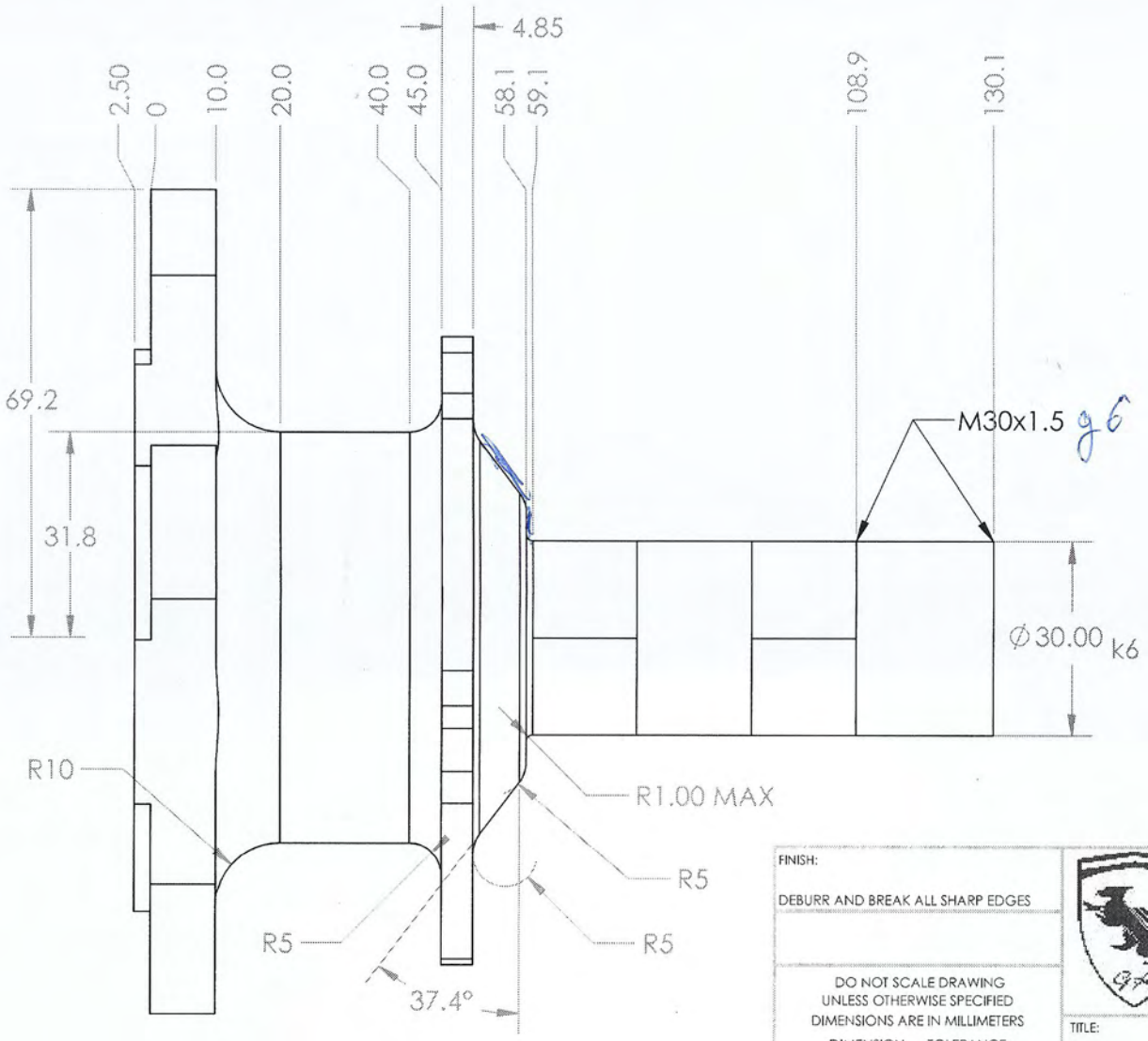

FINISH:

DEBURR AND BREAK ALL SHARP EDGES

DO NOT SCALE DRAWING
UNLESS OTHERWISE SPECIFIED
DIMENSIONS ARE IN MILLIMETERS

DIMENSION	TOLERANCE
X.X	±0.1
X.XX	±0.05
ANGLE	±0.1°

GRYPHON RACING
GUELPH, ON

TITLE:

FRONT HUB

ECN:	APPROVAL	DATE	IN
DRAWN	OMM	01/21/19	
CHECKED			
CAPITAN			

MATERIAL: 6061-T6

WEIGHT: 523.6 g

DWG NO.

REVISION

SCALE:1:5

SHEET 1 OF 3

A4

SOLIDWORKS Educational Product. For Instructional Use Only.

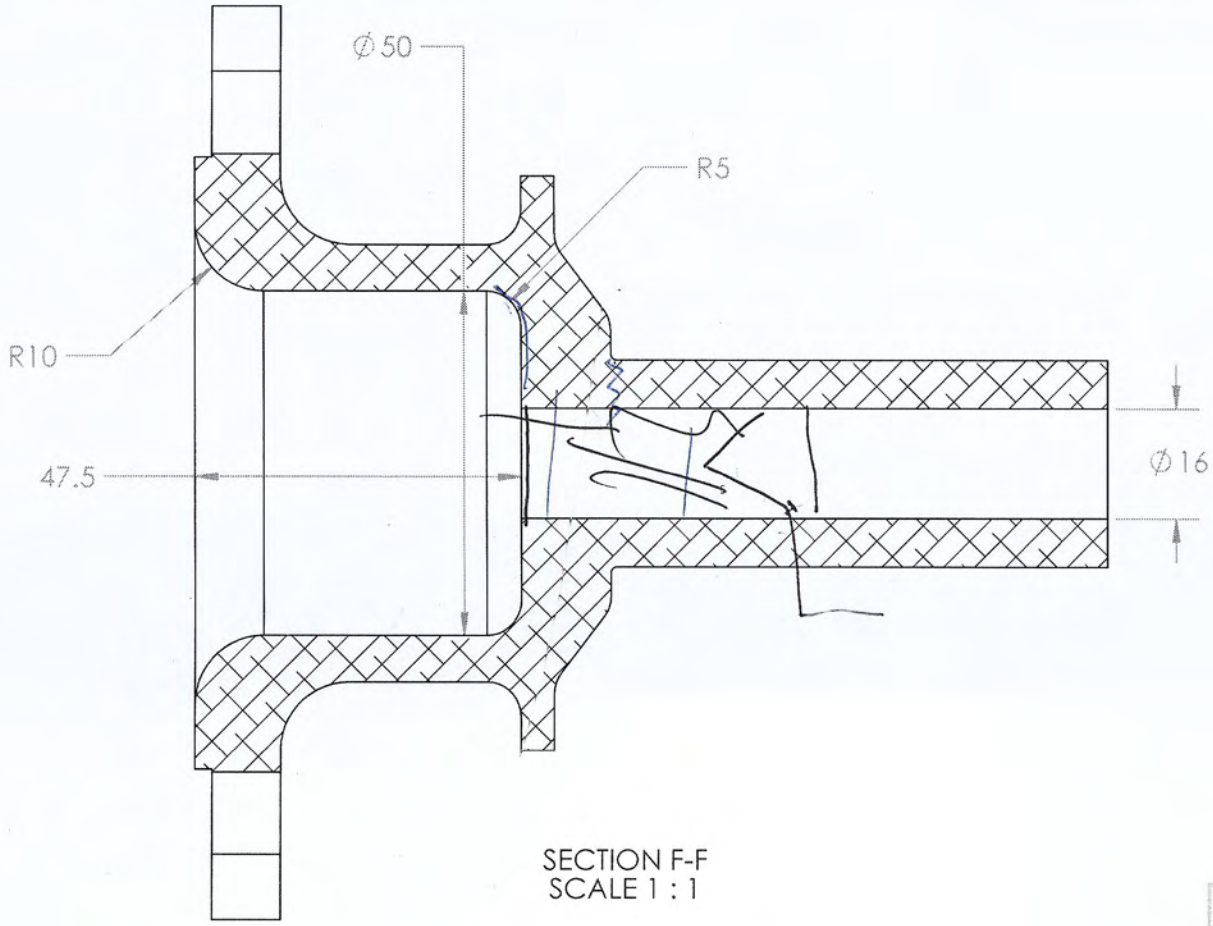

SECTION F-F
SCALE 1 : 1

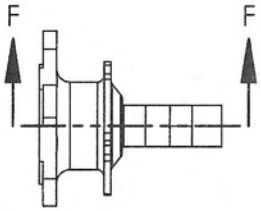

GRYPHON RACING
GUELPH, ON

TITLE:

FRONT HUB

DWG NO.

REVISION

SCALE:1:5

SHEET 3 OF 3

A4

SOLIDWORKS Educational Product. For Instructional Use Only.

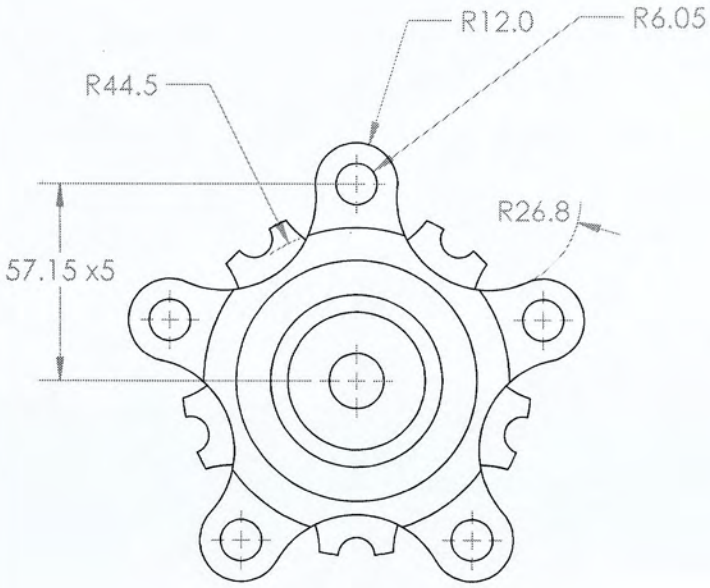

SECTION A-A
SCALE 1 : 2

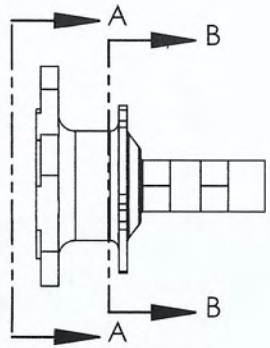

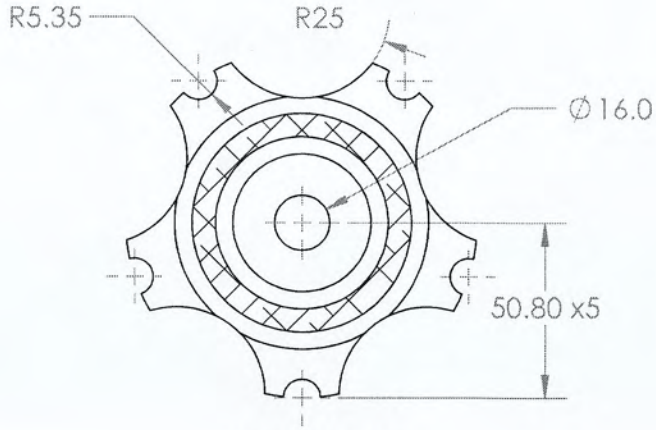

SECTION B-B
SCALE 1 : 2

GRYPHON RACING
GUELPH, ON

TITLE:

FRONT HUB

DWG NO.		REVISION
SCALE:1:5	SHEET 2 OF 3	A4

SOLIDWORKS Educational Product. For Instructional Use Only.

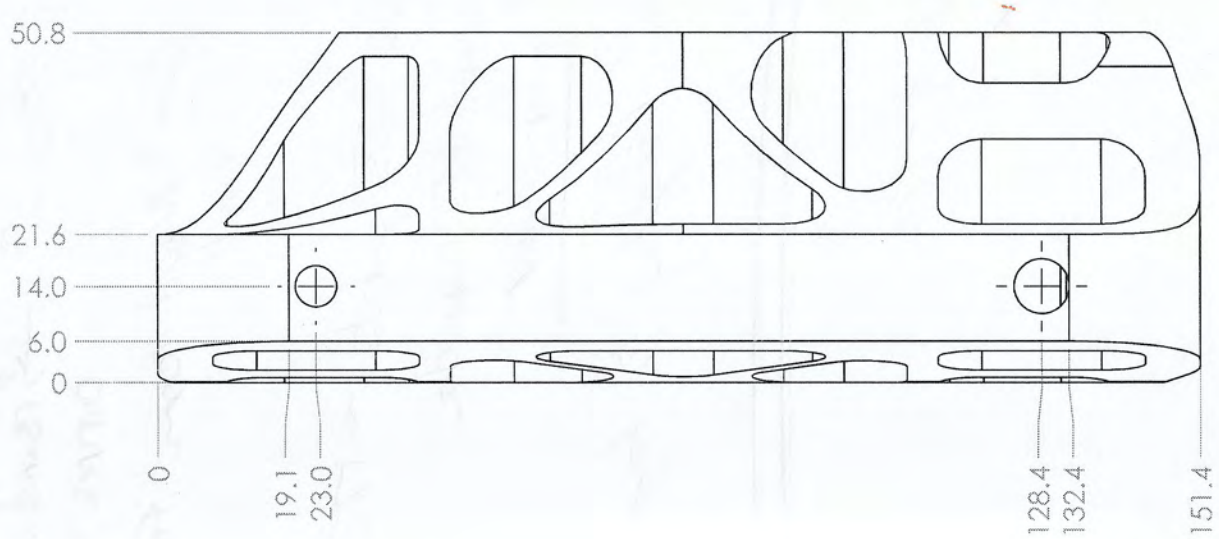

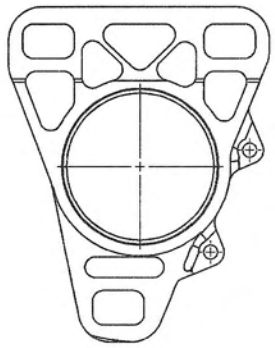

GRYPHON RACING
GUELPH, ON

TITLE:
REAR UPRIGHT - RIGHT

DWG NO.
GRC19_PT_SU_0036

REVISION

SCALE:1:5 | SHEET 2 OF 3 | A4

SOLIDWORKS Educational Product. For Instructional Use Only.

Carbon Required for wheel

Diameter of cylinder for rough approx:

$\pi(10'')(7'') = 220 \text{ in}^2$ → round up to 375 to account for curves in geometry.

$\frac{1296 \text{ in}^2}{1 \text{ yard}^2}$ → Need room for waste material as well.

24" x 72" cloth = 1.33 yards = 1724 in^2

$60 composites canada CAU 180-24-LY

Need 375 in^2 per layer

Get 6 yards. Roughly 10 layers of carbon without extra

Mold Sections

Section 1: Full 4.5"

Section 2: 2.4"

Section 3: 3.5"

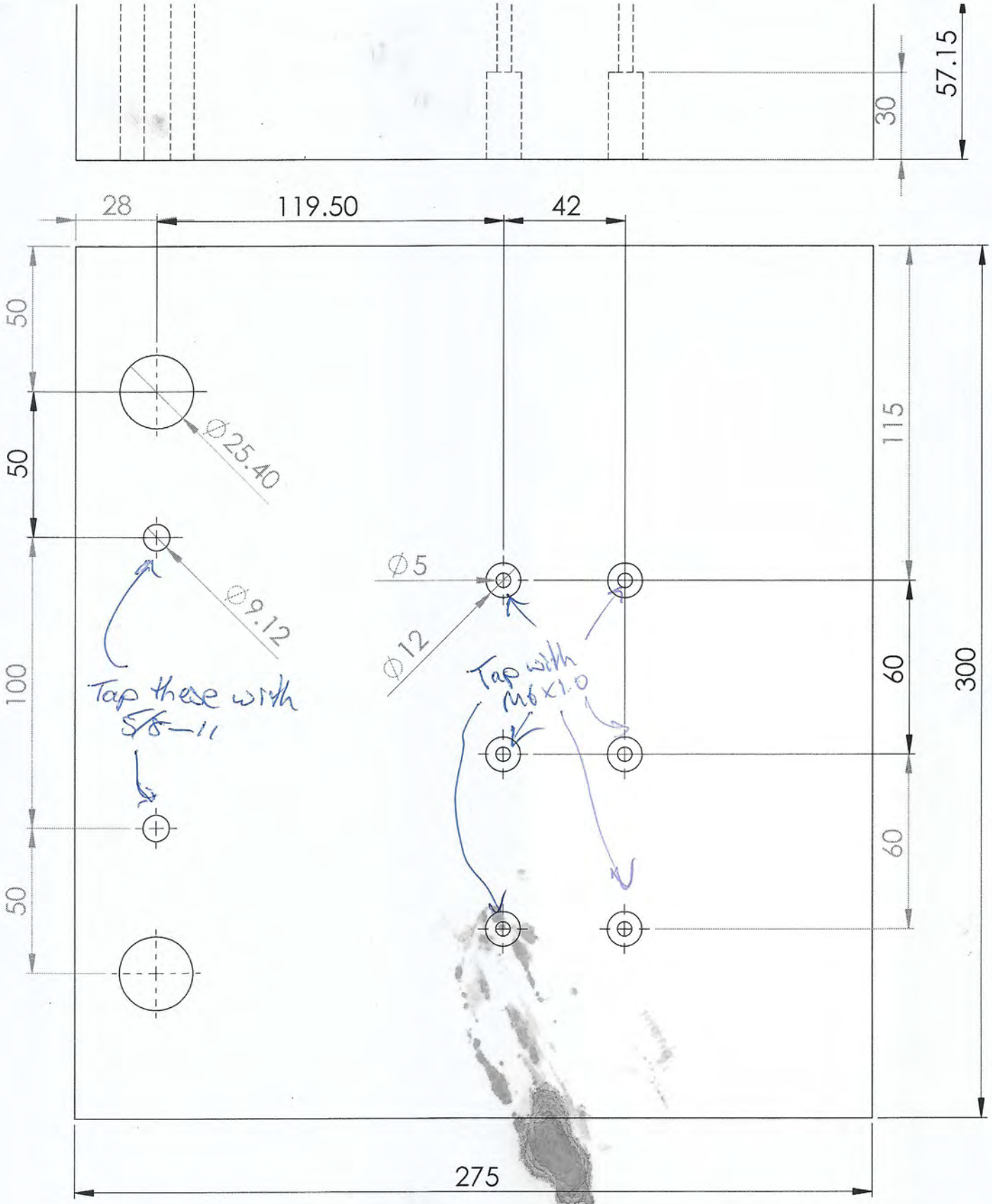

UNLESS OTHERWISE SPECIFIED:		NAME	DATE
DIMENSIONS ARE IN MM TOLERANCES: X: ±0.1 XX: ±0.05 ANGULAR: ± 1°	DRAWN	OMM	10/29/2018
	CHECKED		
	COMMENTS:		

GRYPHON RACING

TITLE:

SHOCK DYNO BASE

SOLIDWORKS Educational Product. For Instructional Use Only.

tapped

oped with

- M6x1.0
- Square off block and deburr first
- Attach with clamps, gauge

MATERIAL

SIZE | DWG. NO. | REV

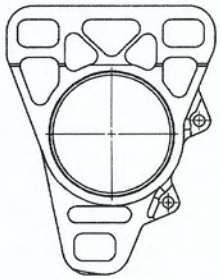

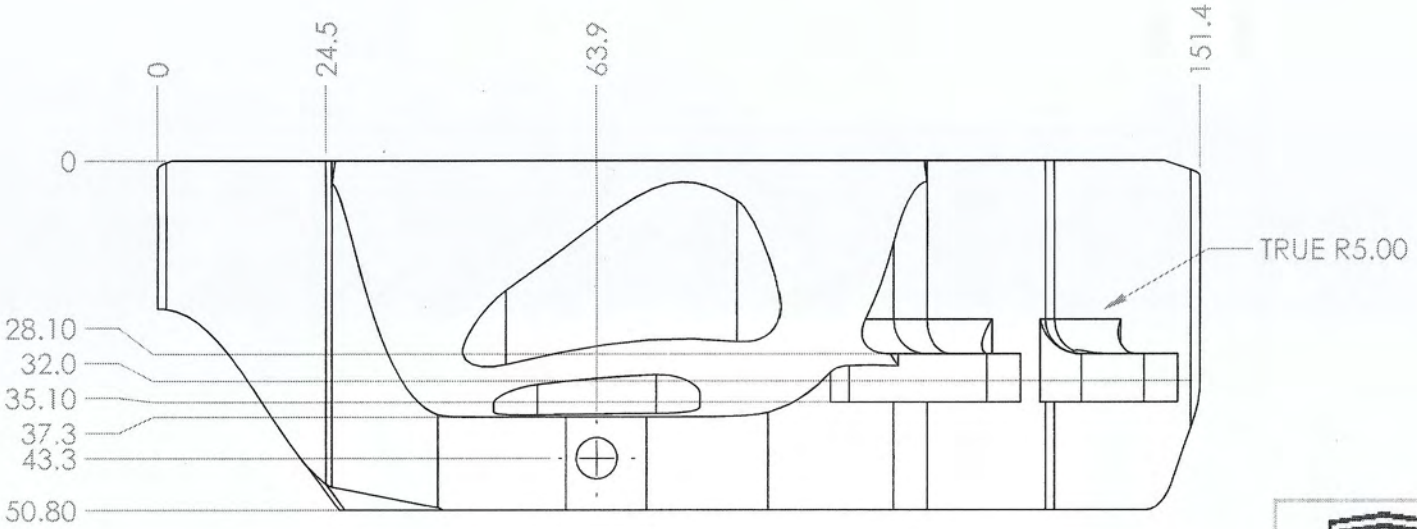

GRYPHON RACING
GUELPH, ON

TITLE:
REAR UPRIGHT - RIGHT

DWG NO.
GRC19_PT_SU_0036

REVISION

SCALE:1:5 | SHEET 3 OF 3 | A4

SOLIDWORKS Educational Product. For Instructional Use Only.

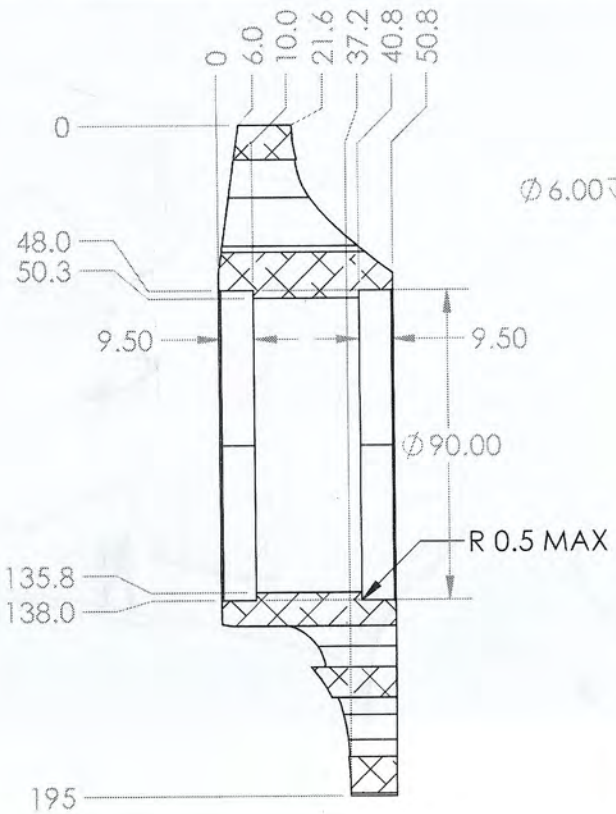

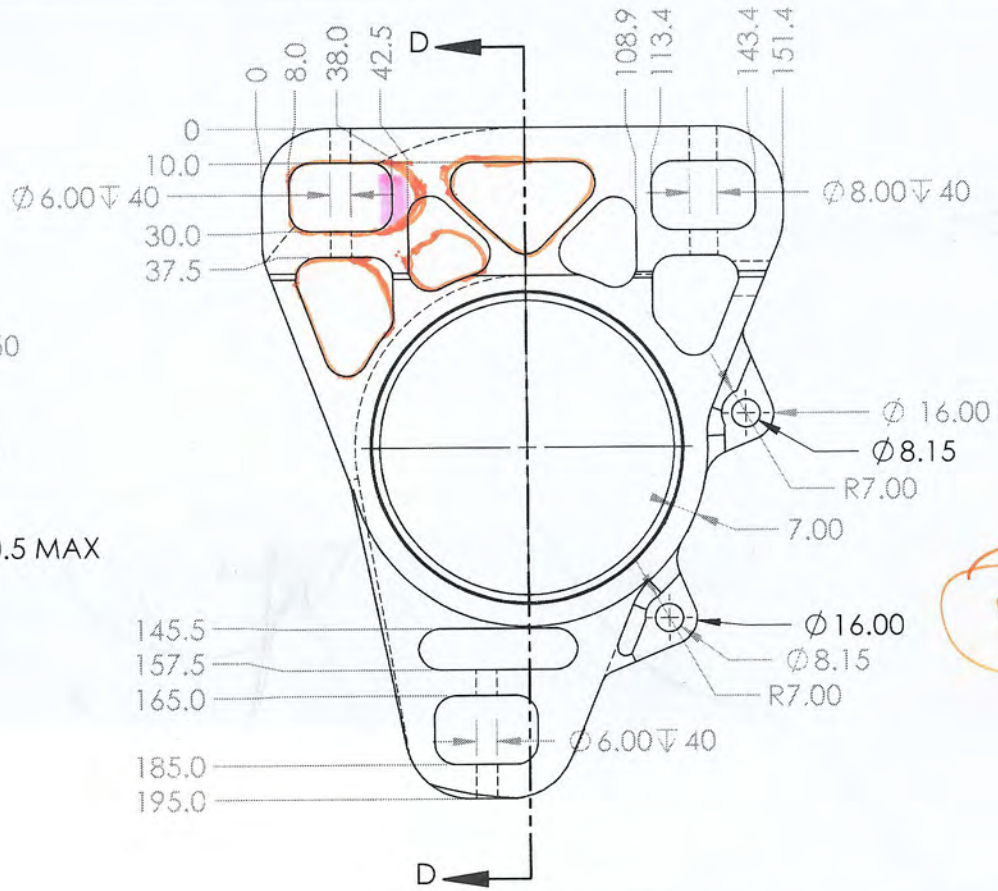

SECTION D-D
SCALE 1 : 2

153.18 2019 QR.
159.7 2018 QR

ECN:	APPROVAL	DATE	IN
DRAWN	OMM	01/21/19	
CHECKED			
CAPITAN			

FINISH:
DEBURR AND BREAK ALL SHARP EDGES

DO NOT SCALE DRAWING
UNLESS OTHERWISE SPECIFIED
DIMENSIONS ARE IN MILLIMETERS

DIMENSION	TOLERANCE
X.X	±0.1
X.XX	±0.05
ANGLE	±0.1°

MATERIAL: 6061-T6

WEIGHT:

GRYPHON RACING
GUELPH, ON

TITLE:
REAR UPRIGHT - RIGHT

DWG NO.
GRC19_PT_SU_0036

REVISION

SCALE: 1:5

SHEET 1 OF 3

A4

SOLIDWORKS Educational Product. For Instructional Use Only.

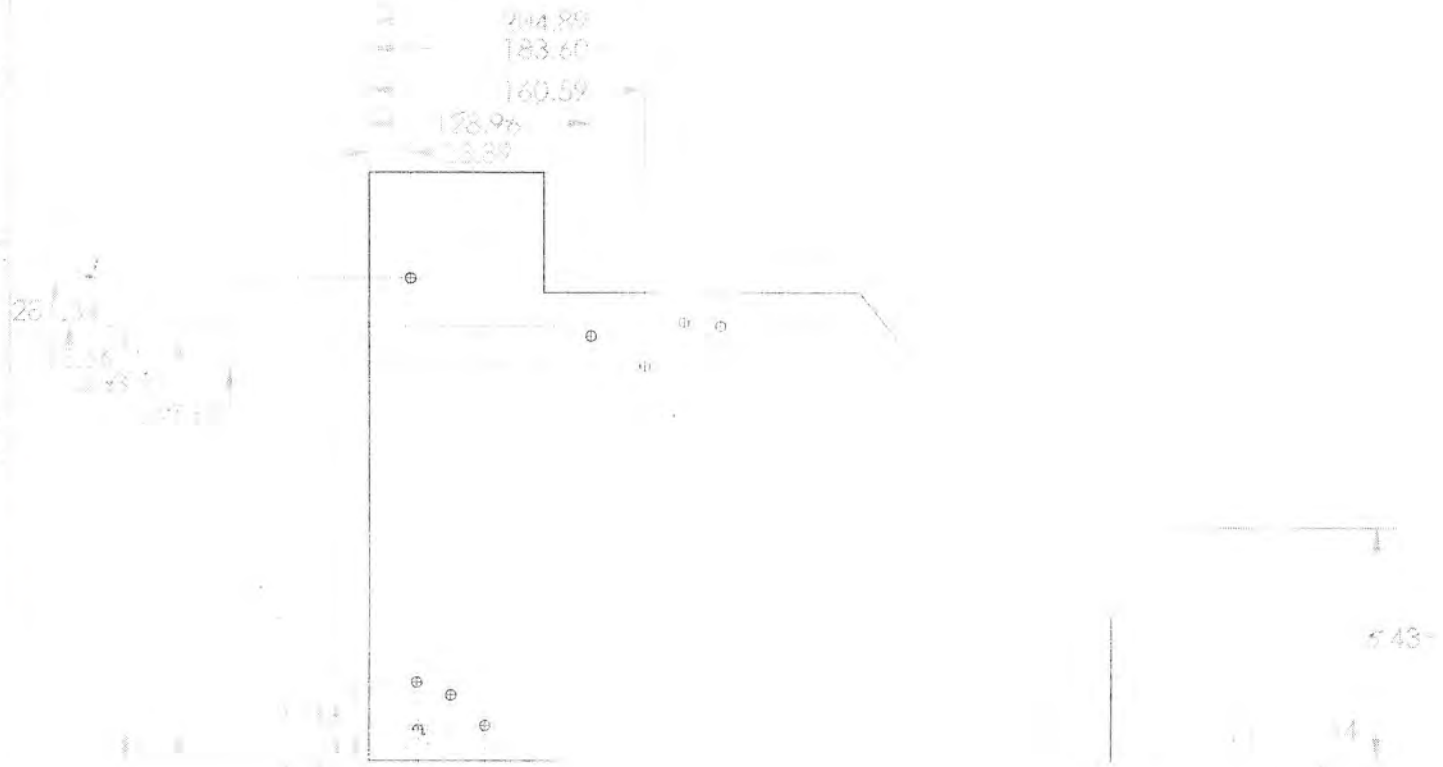

GRYPHON RACING
GUELPH, ON

TITLE

A-ARM JIG

ECN:			
DRAWN	OMM	01/10/19	
CHECKED			
CAPITAN			

DWG NO. A4

SOLIDWORKS Educational Product. For Instructional Use Only.

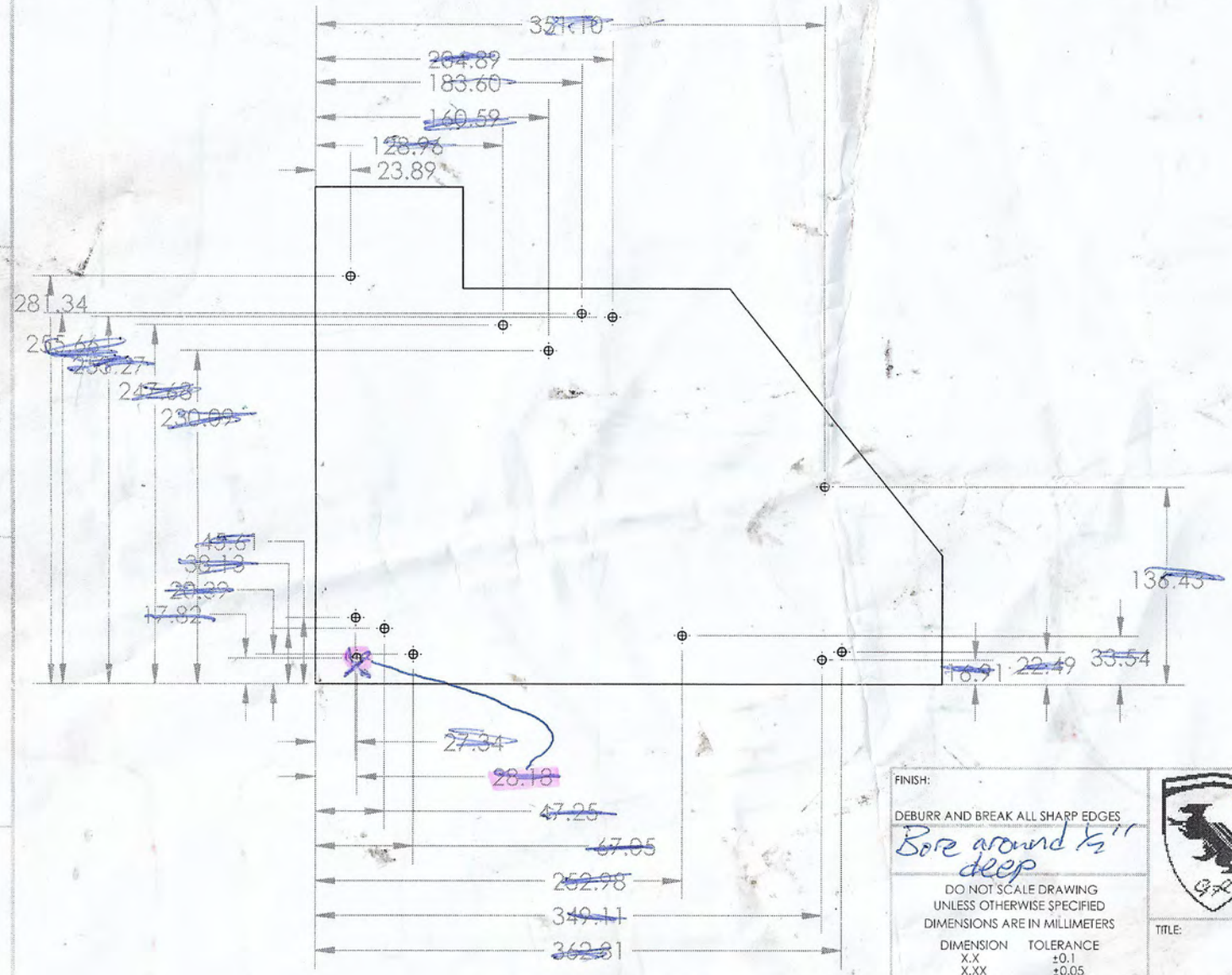

FINISH:

DEBURR AND BREAK ALL SHARP EDGES

Bore around ½" deep

DO NOT SCALE DRAWING
UNLESS OTHERWISE SPECIFIED
DIMENSIONS ARE IN MILLIMETERS

DIMENSION	TOLERANCE
X.X	±0.1
X.XX	±0.05
ANGLE	±0.1°

GRYPHON RACING
GUELPH, ON

TITLE:

A-ARM JIG

ECN:	APPROVAL	DATE	IN
DRAWN	OMM	01/10/19	
CHECKED			
CAPITAN			

MATERIAL:

WEIGHT:

DWG NO.

REVISION

SCALE:1:5

SHEET 1 OF 2

A4

SOLIDWORKS Educational Product. For Instructional Use Only.

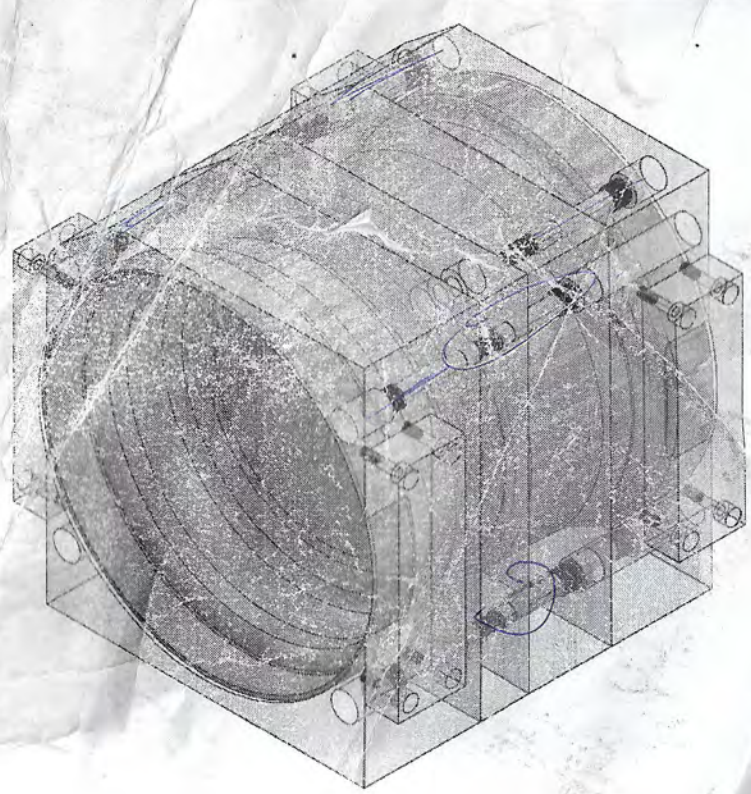

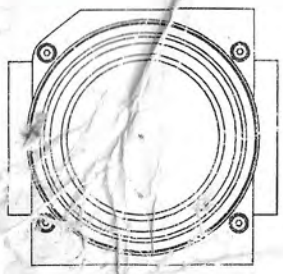

FINISH:

DEBURR AND BREAK ALL SHARP EDGES

DO NOT SCALE DRAWING
UNLESS OTHERWISE SPECIFIED
DIMENSIONS ARE IN MILLIMETERS

DIMENSION	TOLERANCE
X.X	±0.1
X.XX	±0.05
ANGLE	±0.1°

GRYPHON RACING
GUELPH, ON

TITLE:

MOLD_ASSEMBLY

ECN:	APPROVAL	DATE	IN
DRAWN	OMM	02/09/19	
CHECKED			
CAPTAIN			

MATERIAL:

WEIGHT:

DWG NO.

REVISION

SCALE:1:10

SHEET 1 OF 2

A4

SOLIDWORKS Educational Product. For Instructional Use Only.

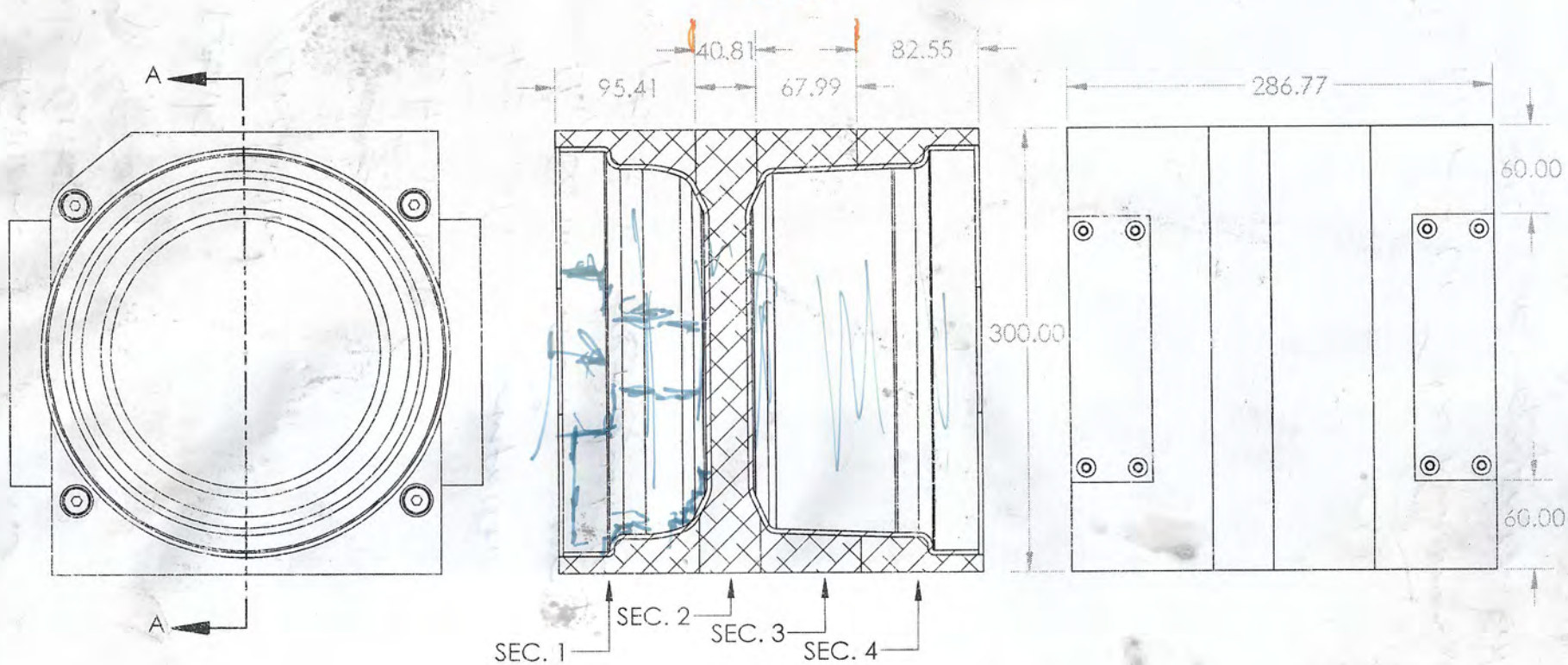

SECTION A-A
SCALE 1 : 4

GRYPHON RACING
GUELPH, ON

TITLE:
MOLD_ASSEMBLY

DWG NO.
REVISION

SCALE: 1:10
SHEET 2 OF 2
A4

SOLIDWORKS Educational Product. For Instructional Use Only.

POSTER DEADLINE: 03/05 @ 8AM

Problem Definition
Constraints + Criteria
Strategy/Approach

Design Details
Results/Conclusion

What pictures to include?
FEA: Stress + Deflection, comparisons?
Mold Assembly/Section View?
Finished product w/ tire + ~~wheel~~ no center?

Faculty Advisor: Dr. John Runcimon
Acknowledgements: Barry Vespragen, Ken Gotham, Dave Wright, Andy Anthony Meola, Gryphon Racing

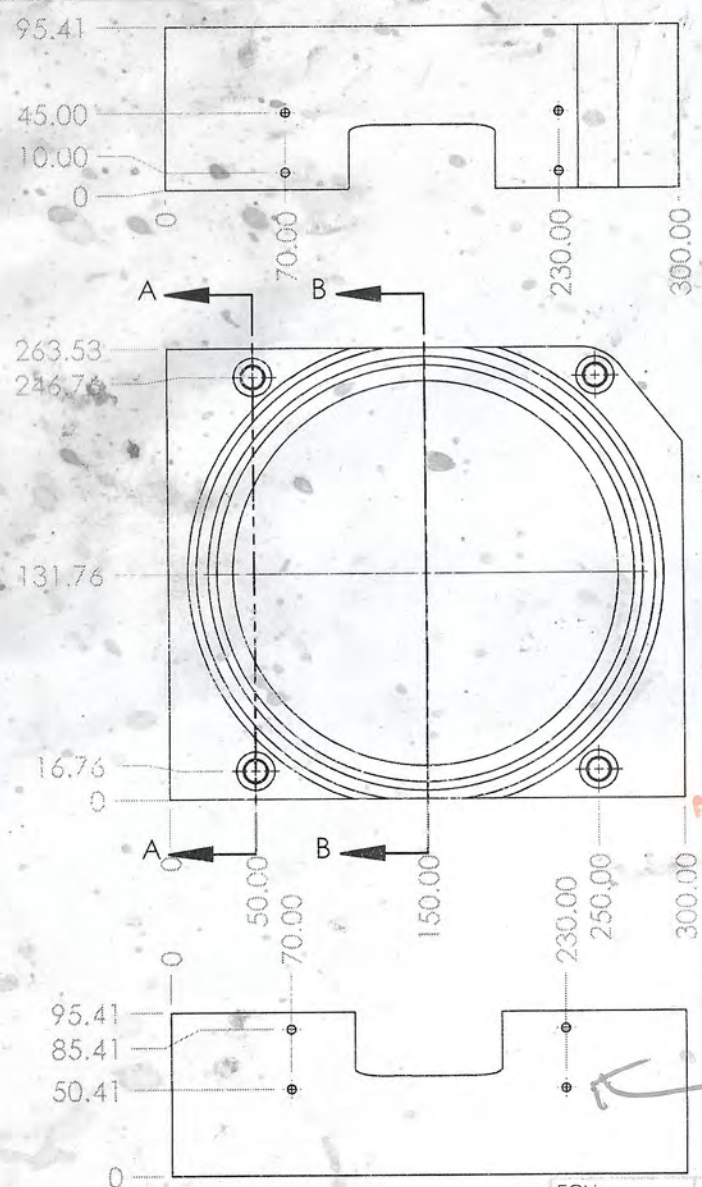

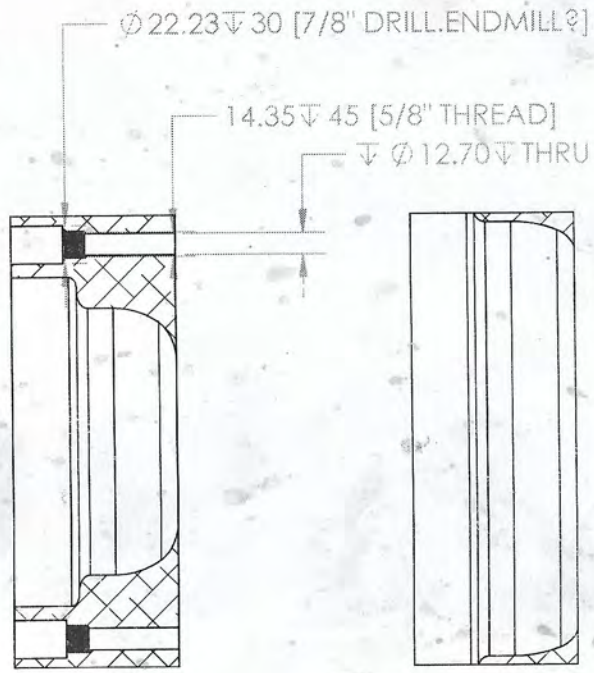

SECTION A-A
SCALE 1 : 4

SECTION B-B
SCALE 1 : 4

FINISH:

DEBURR AND BREAK ALL SHARP EDGES

DO NOT SCALE DRAWING
UNLESS OTHERWISE SPECIFIED
DIMENSIONS ARE IN MILLIMETERS

DIMENSION	TOLERANCE
X.X	±0.1
X.XX	±0.05
ANGLE	±0.1°

GRYPHON RACING
GUELPH, ON

TITLE:
MOLD_SECTION_1

ECN:	APPROVAL	DATE	IN
DRAWN	OMM	02/09/19	
CHECKED			
CAPTAIN			

MATERIAL: 6061-T6 (SS)

WEIGHT: 6158.625

DWG NO.

REVISION

SCALE:1:5

SHEET 1 OF 2

A4

SOLIDWORKS Educational Product. For Instructional Use Only.

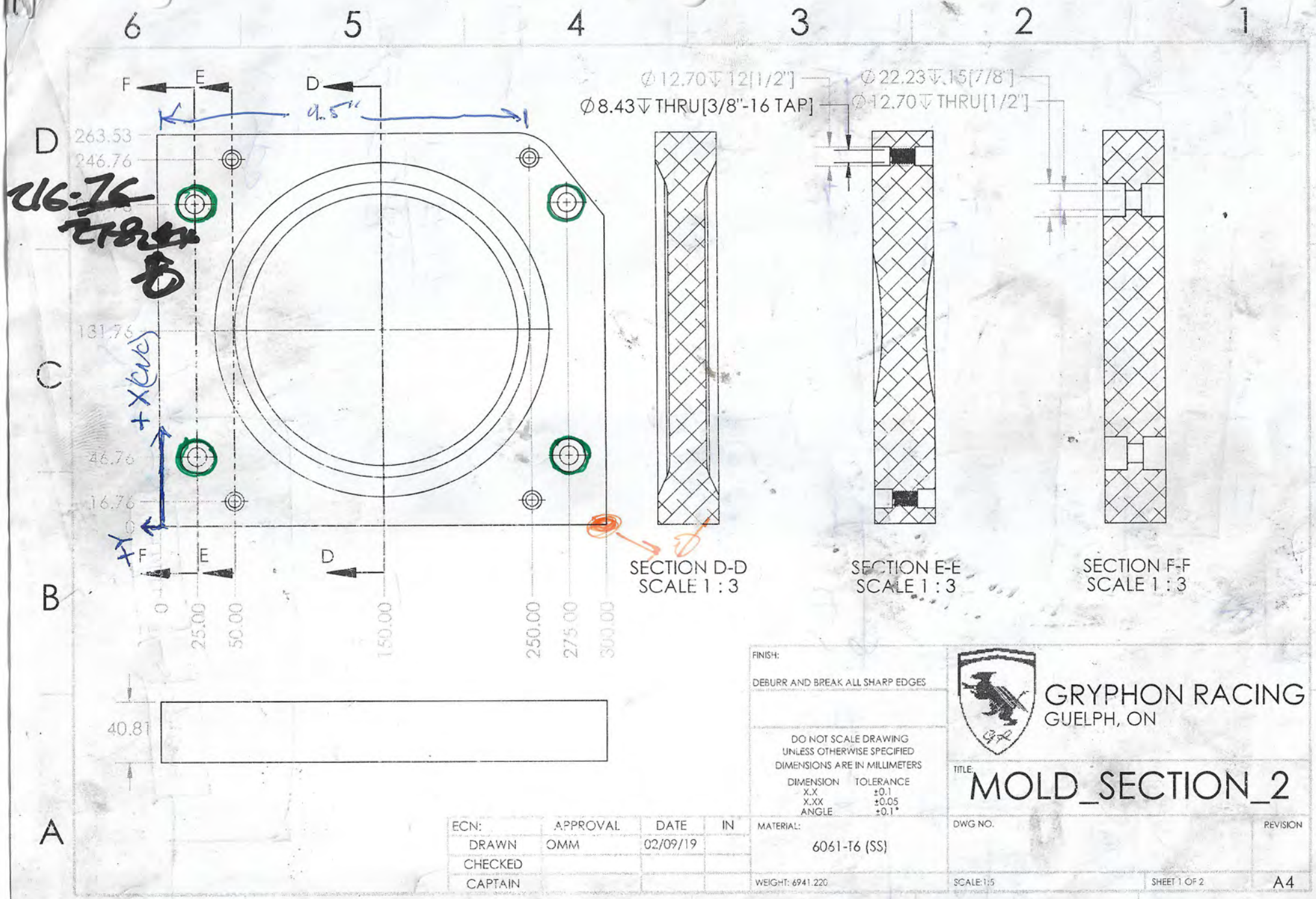
Ø12.70↧12[1/2"]
Ø8.43↧THRU[3/8"-16 TAP]
Ø22.23↧15[7/8"]
Ø12.70↧THRU[1/2"]
SECTION D-D
SCALE 1 : 3
SECTION E-E
SCALE 1 : 3
SECTION F-F
SCALE 1 : 3
263.53
246.76
131.76
46.76
16.76
0
25.00
50.00
150.00
250.00
275.00
300.00
40.81
9.5"
+X(CAD)
+Y
FINISH:
DEBURR AND BREAK ALL SHARP EDGES
DO NOT SCALE DRAWING
UNLESS OTHERWISE SPECIFIED
DIMENSIONS ARE IN MILLIMETERS
DIMENSION TOLERANCE
X.X ±0.1
X.XX ±0.05
ANGLE ±0.1°
GRYPHON RACING
GUELPH, ON
TITLE:
MOLD_SECTION_2
ECN:
APPROVAL
DATE
IN
DRAWN OMM 02/09/19
CHECKED
CAPTAIN
MATERIAL:
6061-T6 (SS)
WEIGHT: 6941.220
DWG NO.
REVISION
SCALE:1:5
SHEET 1 OF 2
A4
SOLIDWORKS Educational Product. For Instructional Use Only.

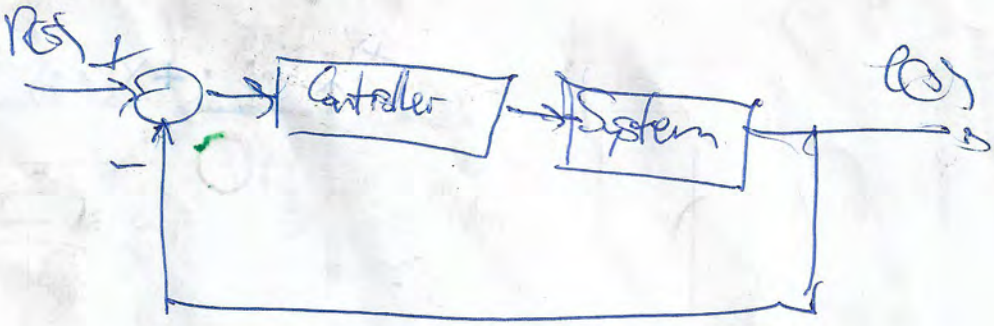

$G(s) = OLTF?$

$$T(s) = \frac{F(s)G(s)}{1 + F(s)G(s)}$$

$$\frac{K\omega_n^2}{s^2 + 2\zeta\omega_n s + \omega_n^2}$$

$$K_v = \lim_{s \to 0} s\,G(s)$$

$$\frac{240}{3(4)} = 20$$

$e(\infty) =$

$$\frac{1}{K_v} = \frac{1}{\lim_{s \to 0} s\,G(s)} = \frac{1}{\lim_{s \to 0} s\left[\frac{10}{s(0.02s+1)}\right]} = \frac{1}{10}$$

$$G_c(s) = K_1 + \frac{K_2}{s}$$

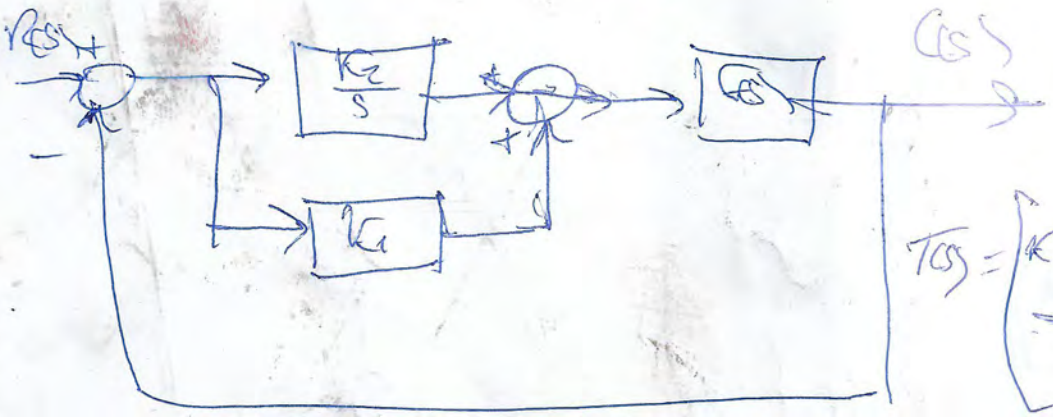

$$G_c(s) = \frac{K_1\left(s + \frac{K_2}{K_1}\right)}{s}$$

$$T(s) = \left[\frac{K_1\left(s + \frac{K_2}{K_1}\right)}{s}\right]\left[\frac{10}{s(0.02s+1)}\right]$$

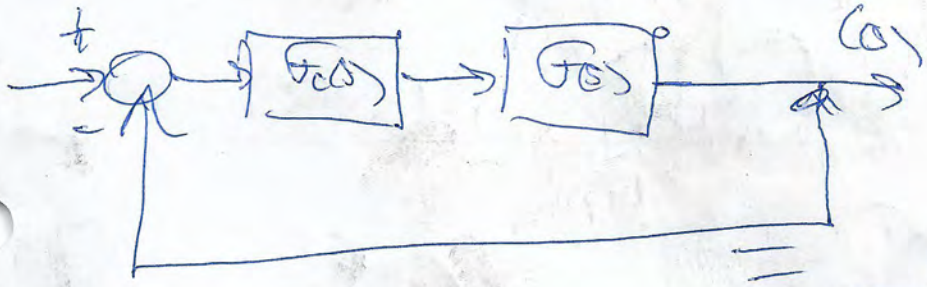

$$T_{cl} = \frac{G_c(s)G(s)}{1 + G_c(s)G(s)}$$

$$= \frac{K\omega_n^2}{s^2 + 2\zeta\omega_n s + \omega_n^2}$$

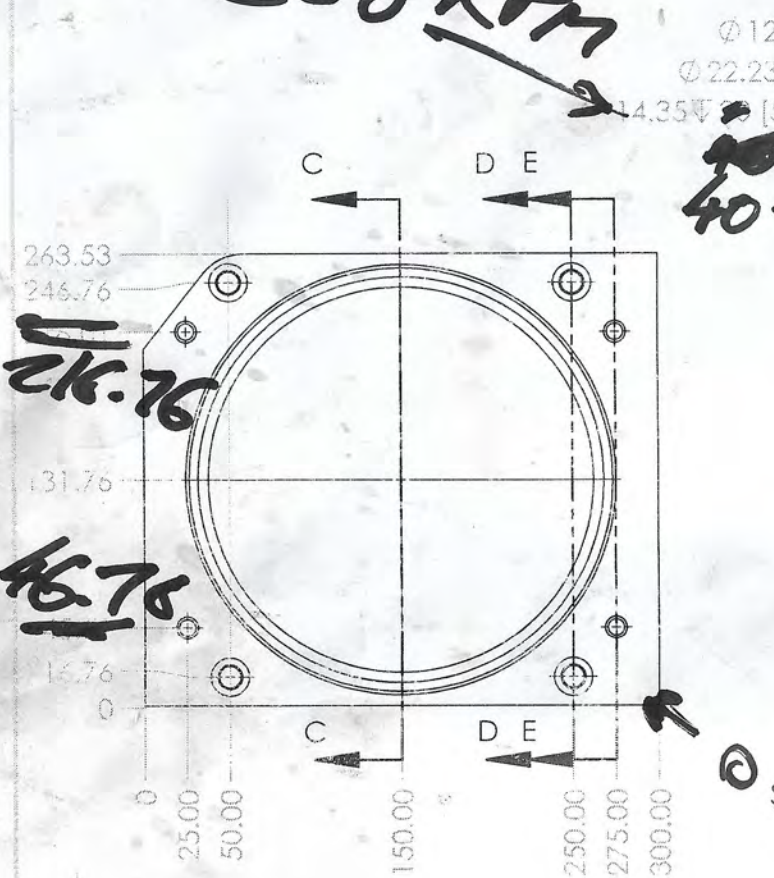

FINISH:

DEBURR AND BREAK ALL SHARP EDGES

DO NOT SCALE DRAWING
UNLESS OTHERWISE SPECIFIED
DIMENSIONS ARE IN MILLIMETERS

DIMENSION	TOLERANCE
X.X	±0.1
X.XX	±0.05
ANGLE	±0.1°

GRYPHON RACING
GUELPH, ON

TITLE:
MOLD_SECTION_3

ECN:	APPROVAL	DATE	IN
DRAWN	OMM	02/09/19	
CHECKED			
CAPTAIN			

MATERIAL: 6061-T6 (SS)

WEIGHT: 5252.447

DWG NO.

REVISION

SCALE: 1:5

SHEET 1 OF 2

A4

SOLIDWORKS Educational Product. For Instructional Use Only.

Roughing - Surface High Speed Optimized : 2" Facemill

~~Rest Roughing~~ - Core Roughing

Rest Roughing - Surface High Speed Rest Roughing : 5/8" Ball

Finishing - Surface Finish Contour.

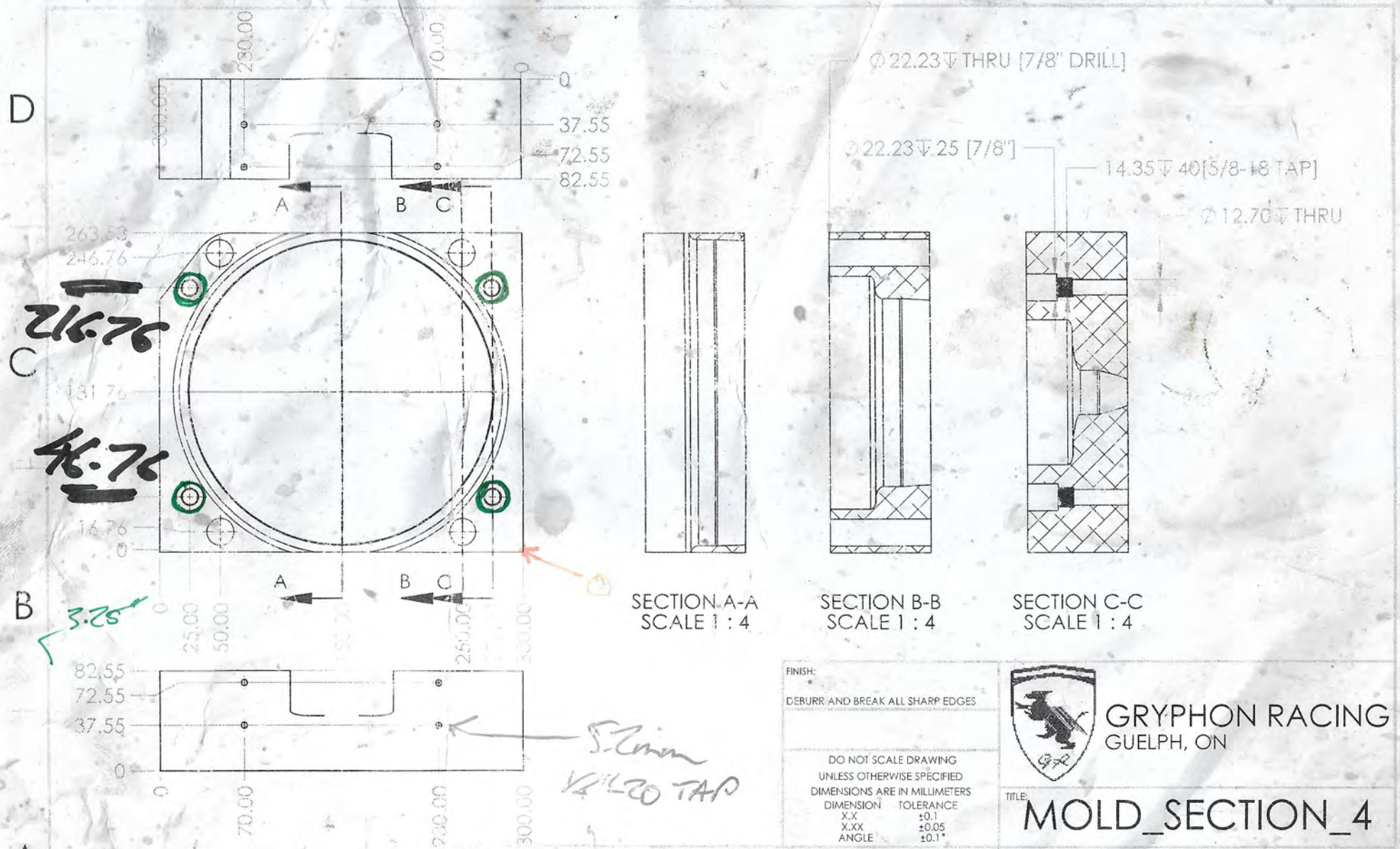

FINISH:

DEBURR AND BREAK ALL SHARP EDGES

DO NOT SCALE DRAWING
UNLESS OTHERWISE SPECIFIED
DIMENSIONS ARE IN MILLIMETERS

DIMENSION	TOLERANCE
X.X	±0.1
X.XX	±0.05
ANGLE	±0.1°

GRYPHON RACING
GUELPH, ON

TITLE:
MOLD_SECTION_4

ECN:	APPROVAL	DATE	IN
DRAWN	OMM	02/09/19	
CHECKED			
CAPTAIN			

MATERIAL: 6061-T6 (SS)

DWG NO.

REVISION

WEIGHT: 4698.867

SCALE:1:5

SHEET 1 OF 2

A4

SOLIDWORKS Educational Product. For Instructional Use Only.

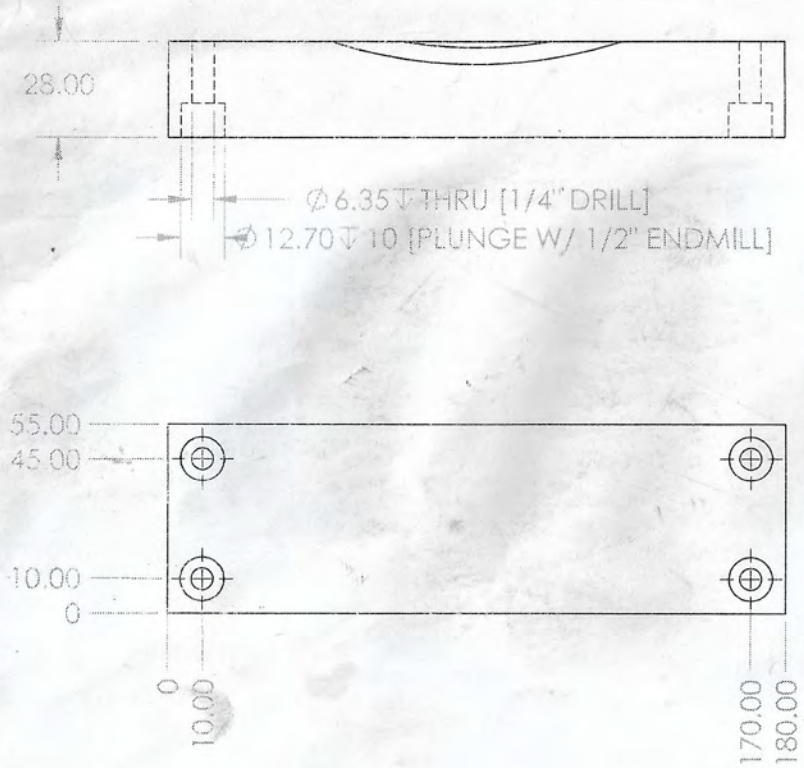

FINISH:

DEBURR AND BREAK ALL SHARP EDGES

DO NOT SCALE DRAWING
UNLESS OTHERWISE SPECIFIED
DIMENSIONS ARE IN MILLIMETERS

DIMENSION	TOLERANCE
X.X	±0.1
X.XX	±0.05
ANGLE	±0.1°

GRYPHON RACING
GUELPH, ON

TITLE:
MOLD_SECTIONS_5-8

ECN:	APPROVAL	DATE	IN
DRAWN	OMM	02/09/19	
CHECKED			
CAPTAIN			

MATERIAL: 6061-T6 (SS)

WEIGHT. 691.286

DWG NO.

REVISION

SCALE:1:2

SHEET 1 OF 2

A4

SOLIDWORKS Educational Product. For Instructional Use Only.

FRONT ARB : 440.6 mm
REAR ARB : 588.5 mm

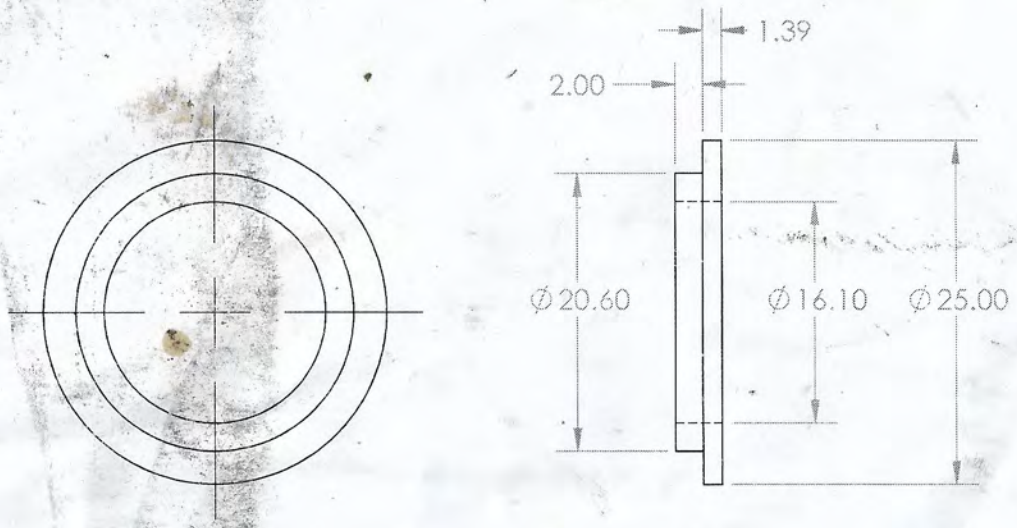

FINISH:

DEBURR AND BREAK ALL SHARP EDGES

DO NOT SCALE DRAWING
UNLESS OTHERWISE SPECIFIED
DIMENSIONS ARE IN MILLIMETERS

DIMENSION	TOLERANCE
X.X	±0.1
X.XX	±0.05
ANGLE	±0.1°

GRYPHON RACING
GUELPH, ON

TITLE:
STEERING RACK FLANGE SPACERS

ECN:	APPROVAL	DATE	IN
DRAWN	OMM	01/22/19	
CHECKED			
CAPITAN			

MATERIAL: 6061-T6 (SS)

WEIGHT: 1.709

DWG NO.

REVISION

SCALE:2:1

SHEET 1 OF 2

A4

SOLIDWORKS Educational Product. For Instructional Use Only.

Other rack spacers are 11.1 mm.

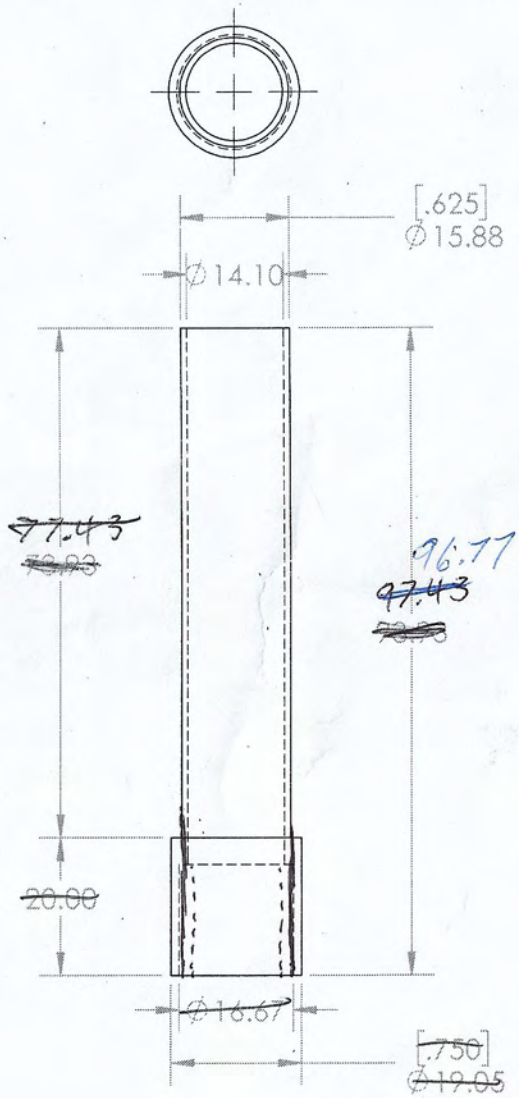

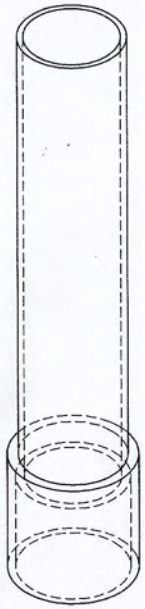

FINISH:

DEBURR AND BREAK ALL SHARP EDGES

DO NOT SCALE DRAWING
UNLESS OTHERWISE SPECIFIED
DIMENSIONS ARE IN MILLIMETERS

DIMENSION	TOLERANCE
X.X	±0.1
X.XX	±0.05
ANGLE	±0.1°

GRYPHON RACING
GUELPH, ON

TITLE:

ECN:	APPROVAL	DATE	IN
DRAWN			
CHECKED			
CAPITAN			

MATERIAL:

WEIGHT:

DWG NO.

REVISION

SCALE:1:1

SHEET 1 OF 2

A4

SOLIDWORKS Educational Product. For Instructional Use Only.

SECTION B-B
SCALE 1 : 4

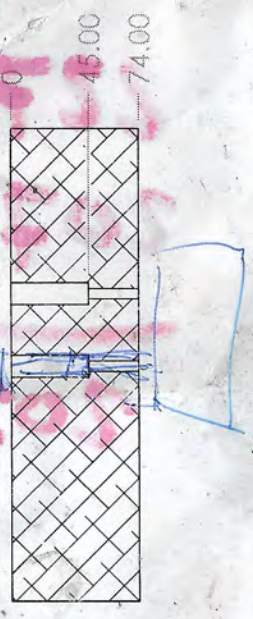

SECTION D-D
SCALE 1 : 4

15 mm from tube end to spherical joint center

FINISH: DEBURR AND BREAK ALL SHARP EDGES		GRYPHON RACING GUELPH, ON	
DO NOT SCALE DRAWING UNLESS OTHERWISE SPECIFIED DIMENSIONS ARE IN MILLIMETERS DIMENSION TOLERANCE X.X ±0.1 X.XX ±0.05 ANGLE ±0.1°		TITLE: SHOCK DYNO MOUNT BASE	
ECN:	APPROVAL	DATE	IN
DRAWN	OMM	01/30/19	
CHECKED			
CAPTAIN			
MATERIAL: 6061-T6 (SS)		DWG NO. GRC19_PT_SU_0101	REVISION
WEIGHT: 16147.952		SCALE: 1:5	SHEET 1 OF 2	A4

SOLIDWORKS Educational Product. For Instructional Use Only.

$KW = 8.8$ Front Nm

$KW = 6(1.15)^2$

Rear 8.96 Nm

$= 11.15$

$MZ = 25.24$

$= 22.35$

$KS = 22.50$

$= 22.50$

$= 11.4$

$= 25.122$

$= 20.72$

$= 22.49$

$= 20.50$

$= 25.122$

2.27

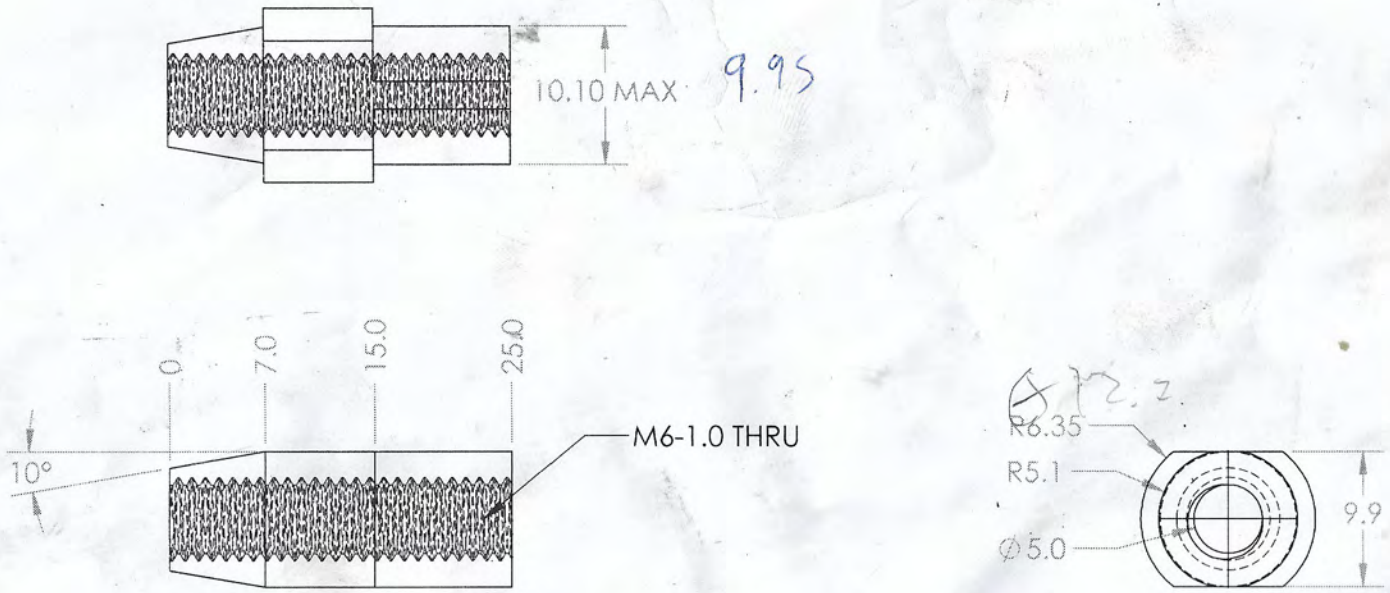

FINISH:

DEBURR AND BREAK ALL SHARP EDGES

DO NOT SCALE DRAWING
UNLESS OTHERWISE SPECIFIED
DIMENSIONS ARE IN MILLIMETERS

DIMENSION	TOLERANCE
X.X	±0.1
X.XX	±0.05
ANGLE	±0.1°

GRYPHON RACING
GUELPH, ON

TITLE:
ROD END LINK M6

ECN:	APPROVAL	DATE	IN
DRAWN	OMM	01/21/19	
CHECKED			
CAPITAN			

MATERIAL: LOW CARBON STEEL

WEIGHT:

DWG NO.
GRC19_PT_SU_0080

REVISION

SCALE:2:1

SHEET 1 OF 2

A4

SOLIDWORKS Educational Product. For Instructional Use Only.

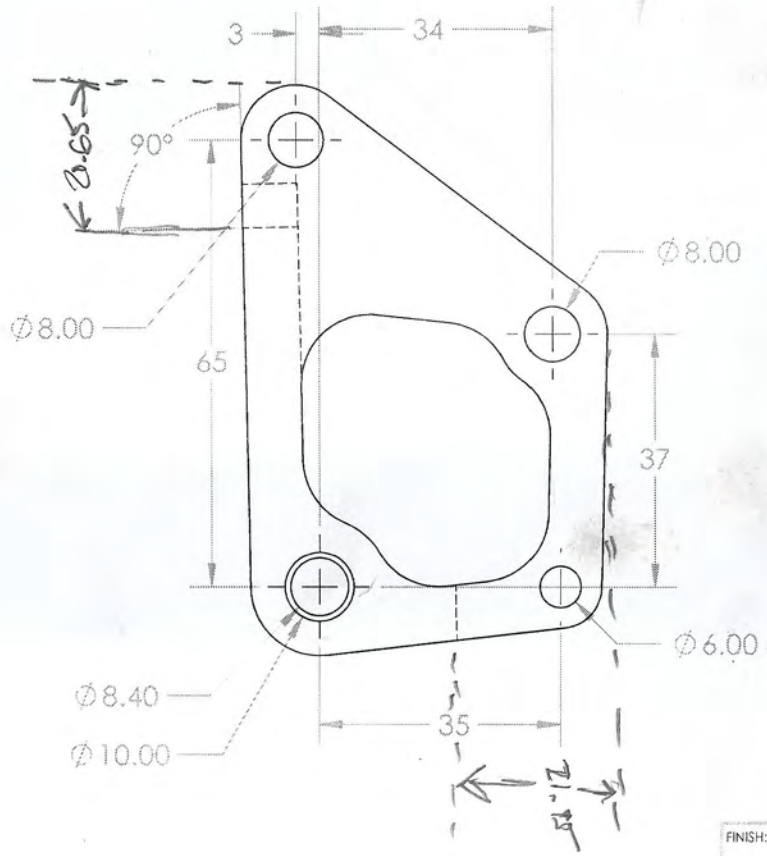

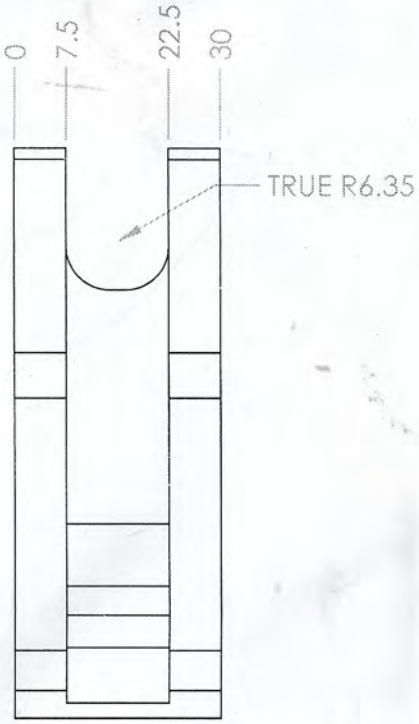

FINISH:

DEBURR AND BREAK ALL SHARP EDGES

DO NOT SCALE DRAWING
UNLESS OTHERWISE SPECIFIED
DIMENSIONS ARE IN MILLIMETERS

DIMENSION	TOLERANCE
X.X	±0.1
X.XX	±0.05
ANGLE	±0.1°

GRYPHON RACING
GUELPH, ON

TITLE:

REAR BELLCRANK

ECN:	APPROVAL	DATE	IN
DRAWN	OMM	01/18/19	
CHECKED			
CAPITAN			

MATERIAL: 6061 T6

WEIGHT: 117.254

DWG NO. GRC19_PT_SU_0079

REVISION

SCALE:1:1

SHEET 1 OF 2

A4

SOLIDWORKS Educational Product. For Instructional Use Only.

Washer Height (Upright Side) = 4.5 mm

5/8" OD 0.035" wall

Separate out +ve and -ve for each.
Curve fit them

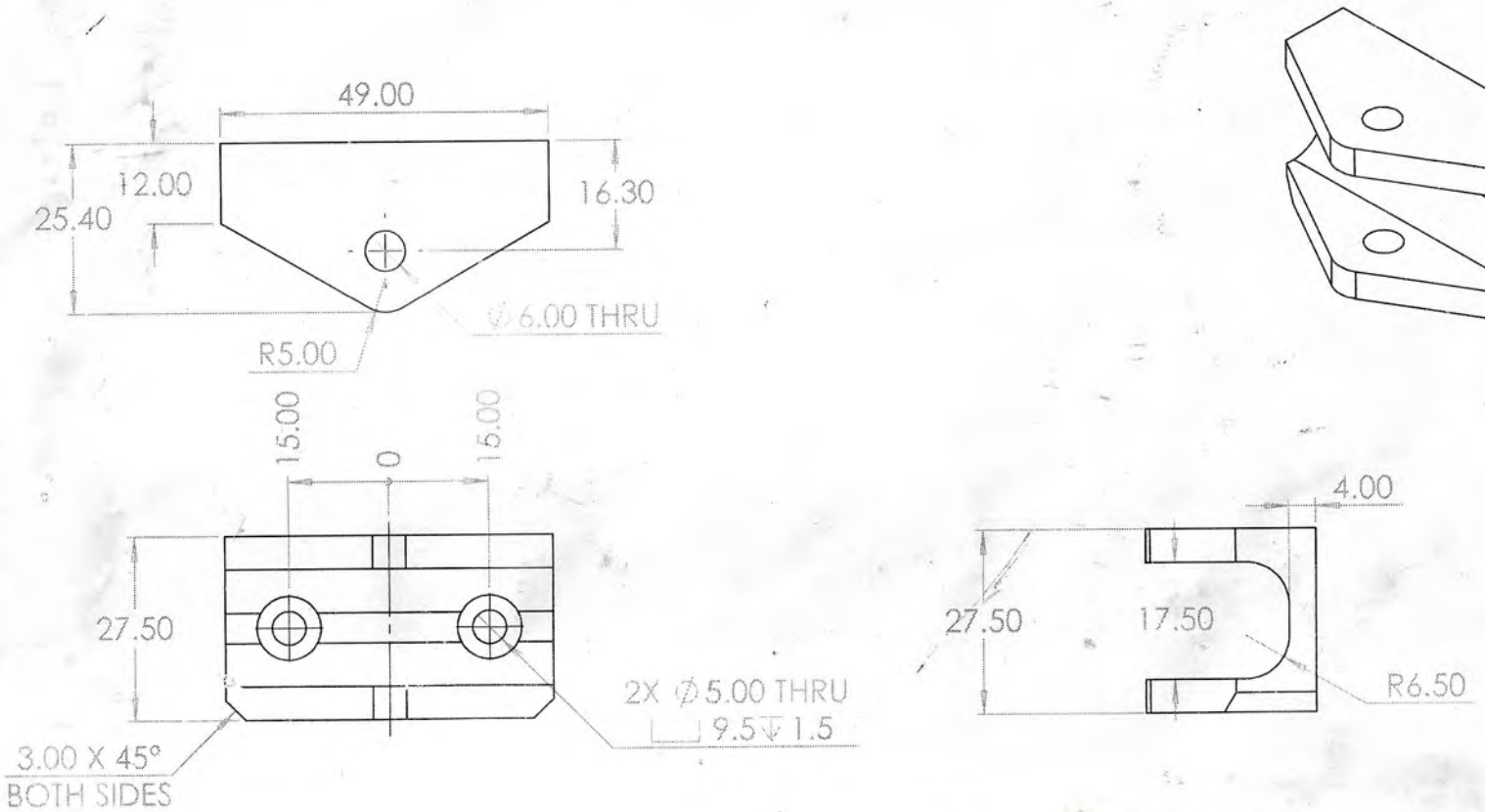

FINISH:

DEBURR AND BREAK ALL SHARP EDGES

DO NOT SCALE DRAWING
UNLESS OTHERWISE SPECIFIED
DIMENSIONS ARE IN MILLIMETERS

DIMENSION	TOLERANCE
X.X	±0.1
X.XX	±0.05
ANGLE	±0.1°

GRYPHON RACING
GUELPH, ON

TITLE:

GRC_PT_SU-0090

ECN:	APPROVAL	DATE	IN
DRAWN	RPK	01/21/19	
CHECKED			
CAPITAN			

MATERIAL: 6061-T6

WEIGHT: 523.6 g

DWG NO.

REVISION

SCALE:1:1

SHEET 1 OF 1

A4

SOLIDWORKS Educational Product. For Instructional Use Only.

Front Hub

RH weight = 462.16 g

Meeting

- Mount Blocks CAM
- A-Arm tubing, ARB, steering
- A-Arm Jig
- Front Upright

Rear A-Arms

Toe Link Summary at 21.85°

Rear Upper Aft: L = 275.22 mm
Fore: L = 225.96 mm → Angle = 52.53°

Rear Lower Aft: L = 324.65 mm
Fore: L = 315.95 mm → Angle = 41.052 deg

Front Hub

Bottom Diameter on Hub Feature: 7.112 mm (exact fit)

Fillet Radius on Internal Bore (Mean Anthony): 10 mm on outside edge, 5 mm on inside

3.5" diameter, 2.5 mm extrude

Hub Mount to Brake Mount Section OD (Rear): 63.86 mm

Front, same thing. Change the mount cutout to match the front.

Knurl Diameter = 12.192 mm → Make mount hole 12.0, around 0.1 mm interference fit.

Front Hub FEA

FX: 95 MPa

FY: 176 MPa

REAR HUB FEA

FX: 94 MPa ✓

FY: 165 MPa ✓

Rear ARB drop link length: 28 mm

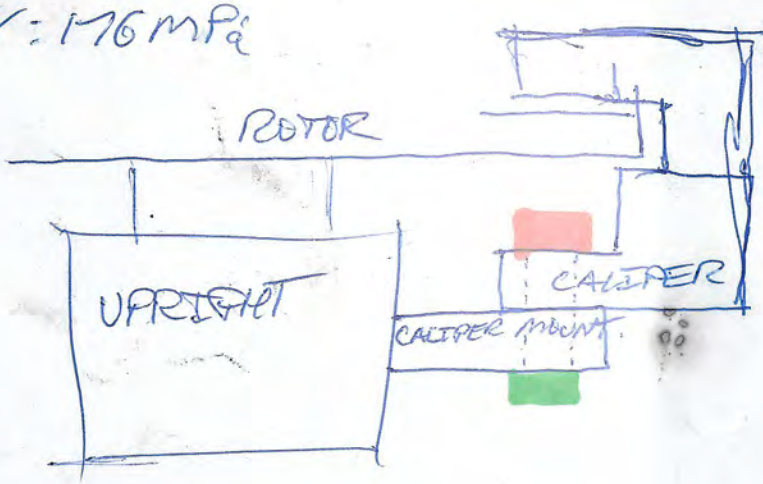

01/14 Meeting

- Spindle clearances on hub
  - building final assemblies

This week:
- making drawings
- starting machining

- Look at sensors for Sarah.

$\frac{15.875-10}{2} = 2.9375 \approx 2.94mm$ — 22mm section ~~length~~ diameter

10mm section length, 11.5mm diameter

A-ARM'S IG PIECES — Steel

x3

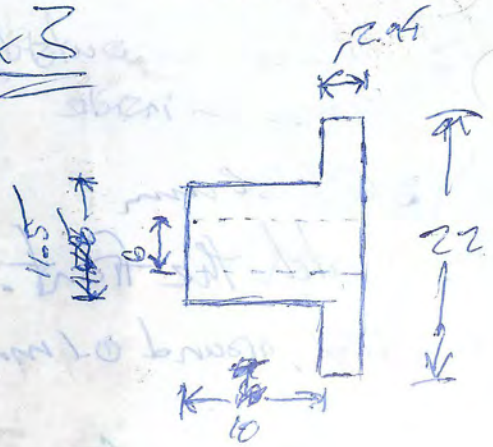

Design Binder Structure

Design Report - Add to this
ec Sheet
Tire Analysis
Adams Modeling, Plots
Camber Sheet
Optimum Lap Sims Plots
Design Spreadsheets, steering, weight, susp
Shock Plots

Design Sketches
Tire Change Justification

SYSTEM DESIGN

Weight Comparison of Components
Uprights
Hubs
A-Arms
Bellcranks
Anti Roll Bars
Steering System
Full 1/4 Assembly - Front and Rear,
FEA - Wheel Assembly Drawings
Carbon Rims
Shocks

COMPONENT DESIGN -
FEA, drawings, writeups of objectives, relevant info.

1.0
~~0.05~~ 1.5 Yellow Front Height = 180
~~0.010~~ 2.0 Orange
~~0.110~~ 3.0 Red Rear Height = 185
4.0
5.0
5.5
6.0
7.5
8.2
9.0

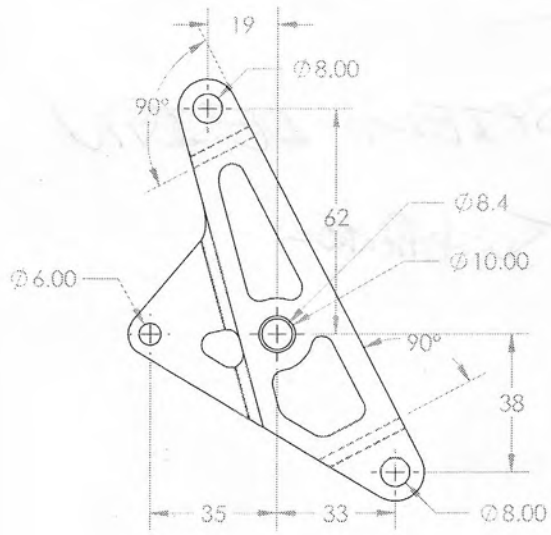

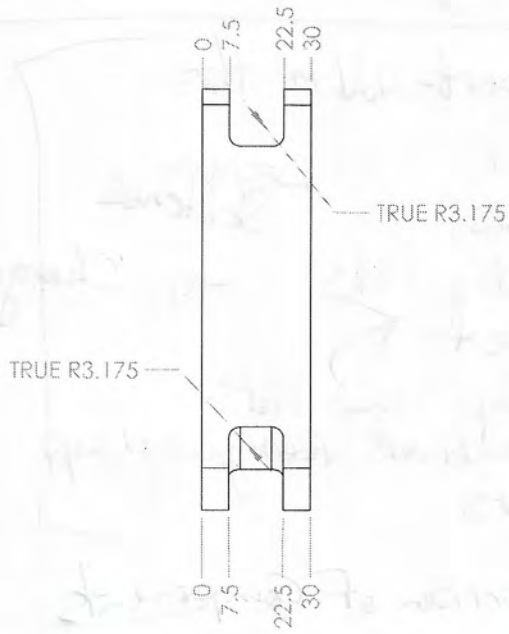

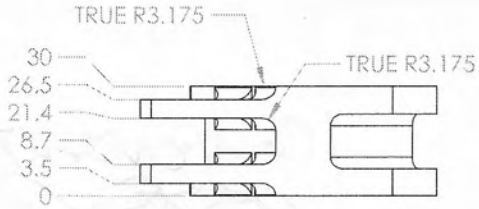

FINISH:

DEBURR AND BREAK ALL SHARP EDGES

DO NOT SCALE DRAWING
UNLESS OTHERWISE SPECIFIED
DIMENSIONS ARE IN MILLIMETERS

DIMENSION	TOLERANCE
X.X	±0.1
X.XX	±0.05
ANGLE	±0.1°

GRYPHON RACING
GUELPH, ON

TITLE:

Front Bellcrank

ECN:	APPROVAL	DATE	IN
DRAWN	OMM	01/18/19	
CHECKED			
CAPITAN			

MATERIAL: 6061-T6 (SS)

WEIGHT: 164.794

DWG NO. GRC19_PT_SU_0078

SCALE:1:2

SHEET 1 OF 2

REVISION A

A4

SOLIDWORKS Educational Product. For Instructional Use Only.

Design Binder Structure

Design Report - Add to this
ec Sheet
Tire Analysis
Adams Modeling, Plots
Camber Sheet
Optimum Lap Sims Plots
Design Spreadsheets, steering, weight, susp
Shock Plots

Design Sketches
Tire Change Justification

SYSTEM DESIGN

Weight Comparison of Components
Uprights
Hubs
A-Arms
Bellcranks
Anti Roll Bars
Steering System
Full 1/4 Assembly - Front and Rear,
FEA - Wheel Assembly Drawings
Carbon Rims
Shocks

COMPONENT DESIGN -
FEA, drawings, writeups of objectives, relevant info.

1.0
~~0.05~~ 1.5 Yellow Front Height = 180
~~0.010~~ 2.0 Orange
~~0.110~~ 3.0 Red Rear Height = 155
4.0
5.0
5.0
6.0
7.5
8.0
9.0

Damper Model Structure

03/08/19

- Import master file from Ohlins data, separate out by adjustment, compression and rebound strokes vs time
- Make mathematical model from data for each sweep:
  - Slope
  - Compression/Rebound Ratio
  - Non-linearity coefficient

→ There will be variability between these for the different sweeps. Consolidate them all together and make curves so that behaviour can be predicted at any value of damping. — lsqnonlin for this

---

- Import test data, seperate out into the different variables measured.
- Interface with user in command line to figure out what the settings were. ~~which manufacturer~~ ~~cause the curve of~~
- Output a scrolling subplot of the different test variables vs. time to see what was done. — Do as an external function!
- Generate a relevant curve from the model. Plot this vs. the test data and lsqnonlin fit of the test data.
- Redo the modeling code on the new curve fit. Should the theoretical model be updated?
- Possibly repeat plots with heat maps to show temperature effects (user input?)
- Possibly develop scaling factors for temperature to capture how it impacts viscosity → force
- Can show master plot of manufacturer plots vs fitted test curves. ~~This would be more relevant to Race Team requests than what Ohlins wants to see.~~

ARB Motion Ratio

2.3 deg body roll

Front

11.1 mm of travel at ARB pickup per 1" upward travel.
ARB arm length varies from 55mm to 102 mm

$\frac{x}{r} = \theta$ (rads)

$\frac{11.1}{102} = 6.23$ deg $\qquad \frac{11.1}{55} = 11.55$ deg

MR = 0.201 - 0.369 (body roll/ARB twist)

Rear

12.8 mm of travel per 1" upward.
ARB arm length varies from 45 mm to 92 mm

$\frac{x}{r} = \frac{12.8}{92} = 8.0$ deg $\qquad \frac{12.8}{45} = 16.3$ deg

MR = 0.14 - 0.287

Suspension Seminar

04/21/19.

MAXIMIZE ACCELERATION - Milliken

TIRES

- $F = \mu N$
- Coordinate axes
- Sensitivities: F_z, P, Camber, Temp, Wear, Speed + Sliding
- Slip angle and slip ratio
- Tire plots

SUSPENSION SYSTEM

- Two main reasons for suspension: Driver comfort and "road-holding"
  - Spring: Absorb shock
  - Damper: Reduce oscillation
- Quarter car model, sprung and unsprung masses
- Six links per wheel → 5th DOF
- Vehicle ~~motions~~ DYNAMICS: roll, pitch, yaw, surge, sway, heave
- Weight transfer
  - amount: $\frac{a_y H}{T}$, $\frac{a_x H}{w}$
  - distribution: moments, spring rates, torsional stiffness
- Wheelbase and track

~~Steering dynamics~~

STEERING DYNAMICS

- Yaw - Yaw cases
- Ackermann
- Effect of slip, and understeer gradient
- Steer diagram - Radius
- Bump steer
- Steering effort
- Yaw velocity - Yaw inertia

SHOCKS

- Damper adjustments: comp and rebound difference; LSC, HSC
- Pitch reduction example
- Gas reservoir
- Temperature

ANTI ROLL BARS

- Ideal ride and roll rates are different
- Allows roll to be tuned independently, car to be balanced easily

Suspension

04/21/19.

SUSPENSION GEOMETRY

- ~~Motion ratios~~ Suspension packaging / configuration
- Motion ratios — shock and ARB.

$MR = \frac{\text{Wheel}}{\text{Damper}}$

$MR = \frac{\text{Body Roll}}{\text{ARB Twist angle}}$

Pushrod/Pullrod angle + bellcrank ratio

- Appropriate response - MR
- Packaging
- Mounting
- CG affect
- Drag effect

roll bars

- Sep. planes orientation

- A-Arm design, linkages
  - Length and angle differences → Influence on camber curve
  - Two Tools/Criteria, camber response and roll centers
- A-Arm angles/forces F_x, F_y
  - Anti squat/dive
- Toe linkage angles ~~toe change~~
  - toe compliance

Upright Points, Steering Axes

- Caster and KPI.
- Stability
- Contact patch forces → transfer to upright points
- Camber steer
- Ride Height change

CLOSING

Recommended changes - hub caliper packaging, refine points and cut weight using test data.