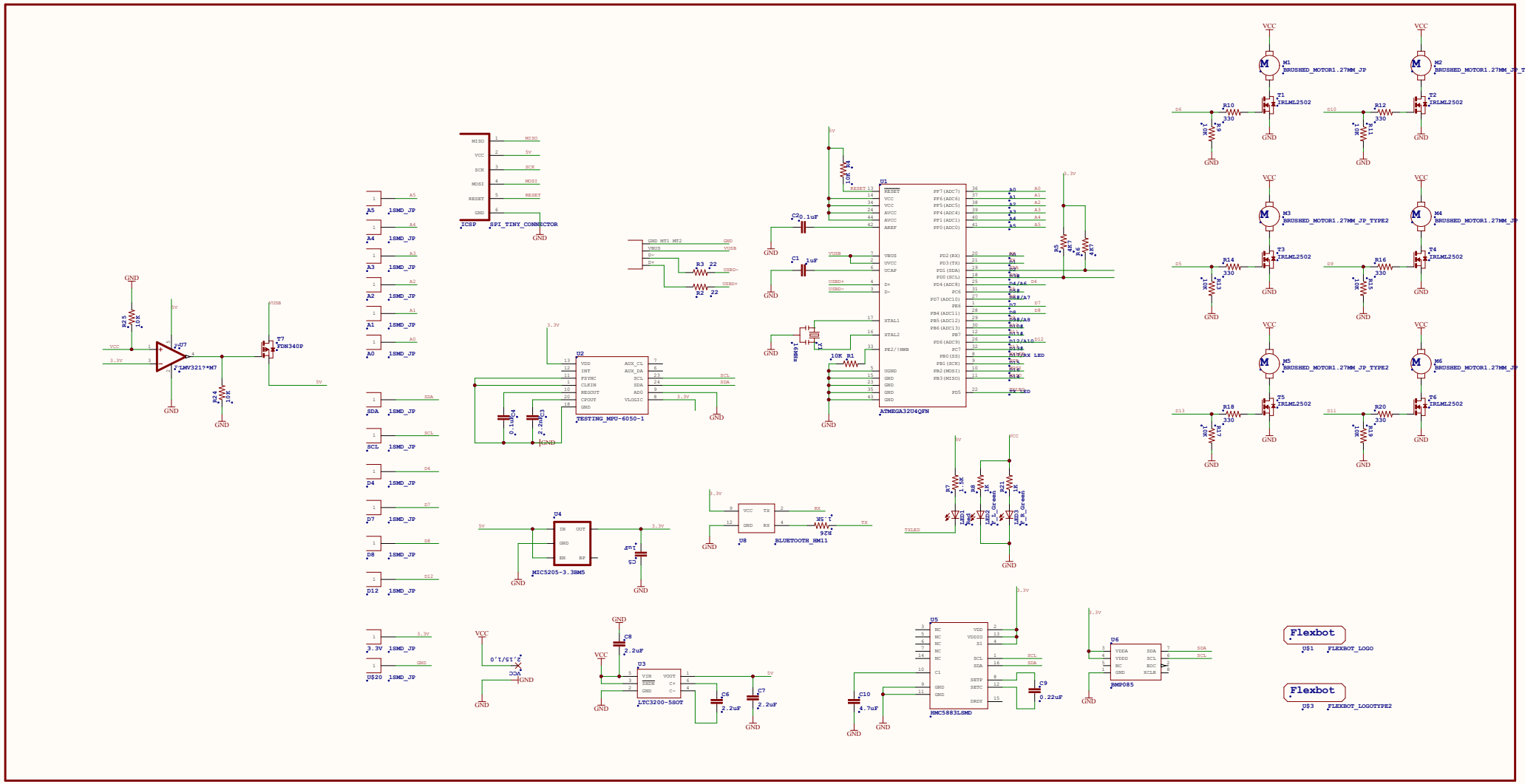
ICSP
SPI_TINY_CONNECTOR
U1
ATMEGA32U4QFN
U2
TESTING_MPU-6050-1
U3
LTC3200-5SOT
U4
MIC5205-3.3BM5
U5
HMC5883LSMD
U6
BMP085
U8
BLUETOOTH_HM11
U7
LMV321?*M7
Z7
FDN340P
M1
BRUSHED_MOTOR1.27MM_JP
M2
BRUSHED_MOTOR1.27MM_JP_TYPE2
M3
BRUSHED_MOTOR1.27MM_JP_TYPE2
M4
BRUSHED_MOTOR1.27MM_JP
M5
BRUSHED_MOTOR1.27MM_JP_TYPE2
M6
BRUSHED_MOTOR1.27MM_JP
T1
IRLML2502
T2
IRLML2502
T3
IRLML2502
T4
IRLML2502
T5
IRLML2502
T6
IRLML2502
Flexbot
U$1
FLEXBOT_LOGO
Flexbot
U$3
FLEXBOT_LOGOTYPE2
VCC
GND
5V
3.3V

Comment	Description	Designator	Footprint	LibRef	Quantity
10kΩ_P		R36, R5, R7, R2, R3, R4, R9, R8, R6, R11, R10, R12, R13, R14, R15	R0603	10kΩ_P	15
1uF	Capacitor Standard 0603 ceramic capacitor, and 5" leaded capacitor.	C1, C5	C0603-C2P	C1P0402-C2P	2
0.1uF	Capacitor Standard 0603 ceramic capacitor, and 5" leaded capacitor.	C2, C12	C0603-C2P	C1P0402-C2P	2
2.2uF	Capacitor Standard 0603 ceramic capacitor, and 5" leaded capacitor.	C3	C0603-C2P	C1P0402-C2P	1
4.2uF	Capacitor Standard 0603 ceramic capacitor, and 5" leaded capacitor.	C4, C7, C8	C0603-C2P	C1P0603-C2P	3
0.22uF	Capacitor Standard 0603 ceramic capacitor, and 5" leaded capacitor.	C9	C0603-C2P	C1P0402-C2P	1
4.7uF	Capacitor Standard 0603 ceramic capacitor, and 5" leaded capacitor.	C10	C0603-C2P	C1P0603-C2P	1
MPI_TINY_CONNECTOR		IC2P	MPI_DP_TINY_CONNECTOR_SO_BOXGR	MPI_DP_TINY_CONNECTOR(MAX4_DP_TINY_CONNECTOR_NO_BORDER	1
USB-MICROB	USB Connectors sp>USB-B-PTH is fully proven SMJ - PRT-00116/COM-00279 sp>USB-miniB is fully proven SMJ - PRT-00597 sp>USB-B-PCB is fully proven sp>USB-A-H is thoroughly reviewed, but untested. Spark Fun Electronics SMJ - PRT-00437 sp>USB-B-SMT is thoroughly reviewed, but untested. Spark Fun Electronics SMJ - PRT-00703 sp>USB-A-SMT has not been used/tested sp>USB-MB-H has not been used/tested sp>USB-MICROB has not been used/tested	J1	USB-MICROB	USB-MICROB	1
Red	Light Emitting Diode (LED) \n\nCHIPLED \n\n \n\n \n\n