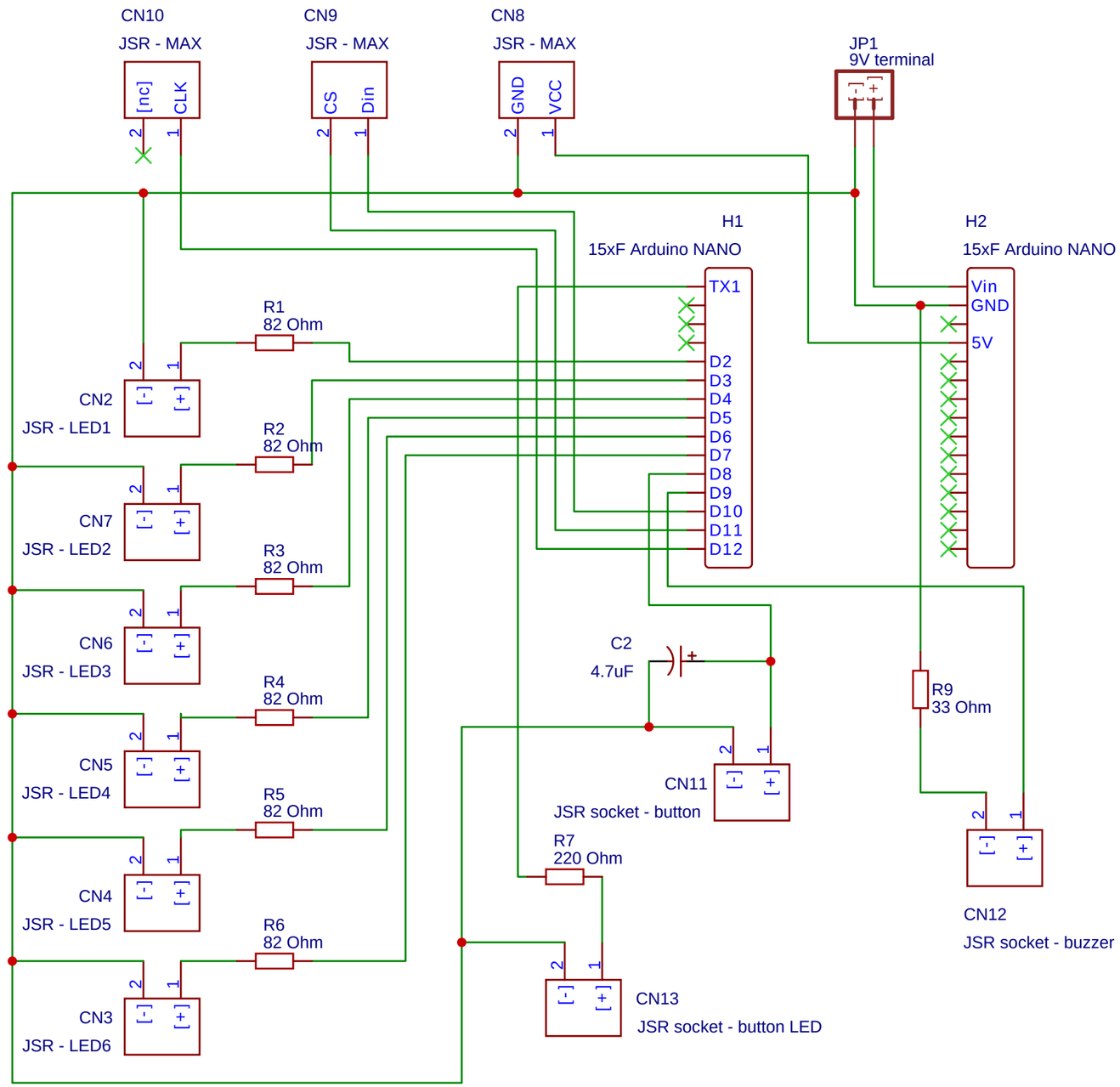

TITLE: I-Ching connection board

REV: 1.2

Company: Oude Snepelaar

Sheet: 1/1

Date: 2020-06-27

Drawn By: ferrie.bank