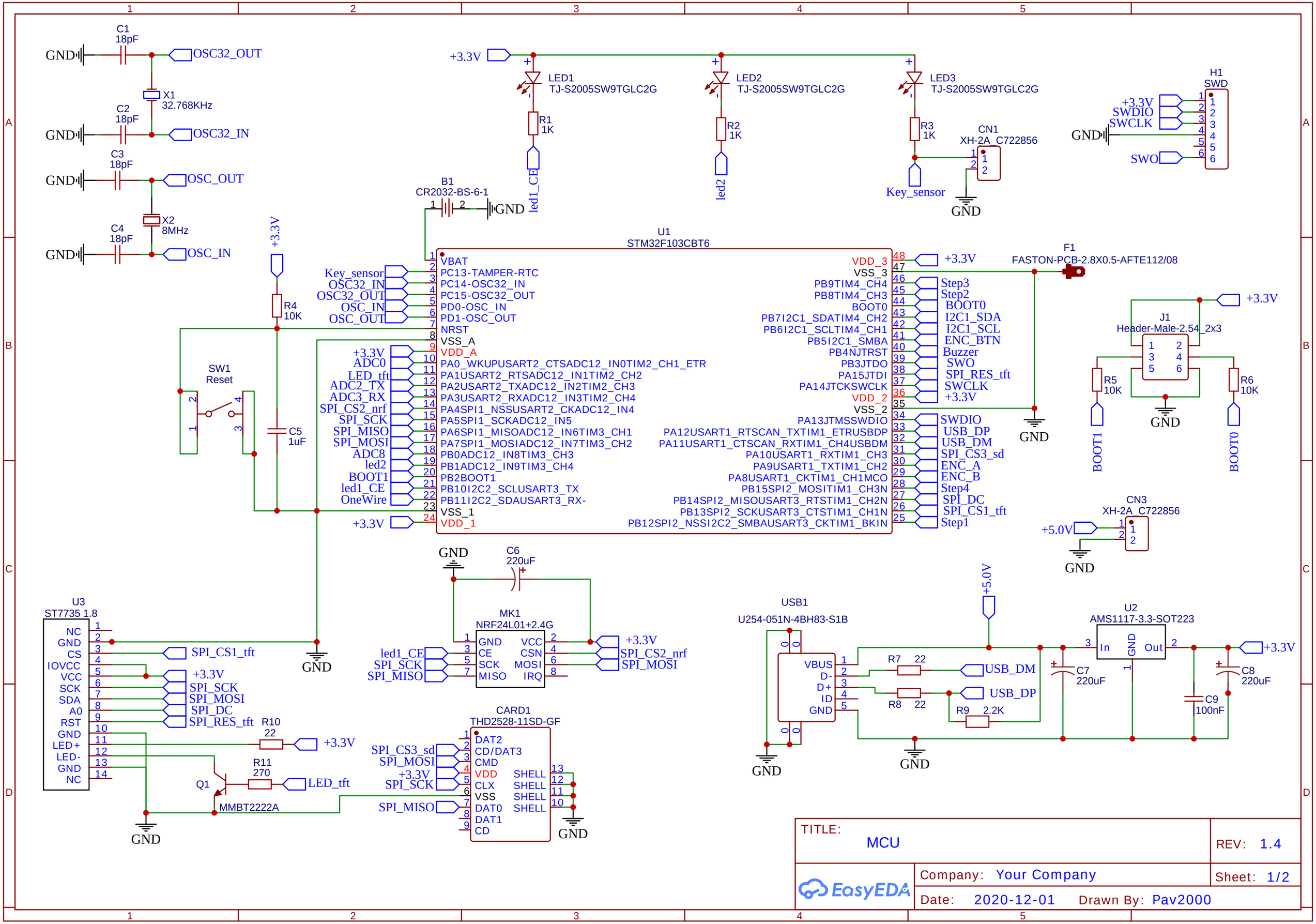

TITLE: MCU

REV: 1.4

Company: Your Company

Sheet: 1/2

Date: 2020-12-01

Drawn By: Pav2000

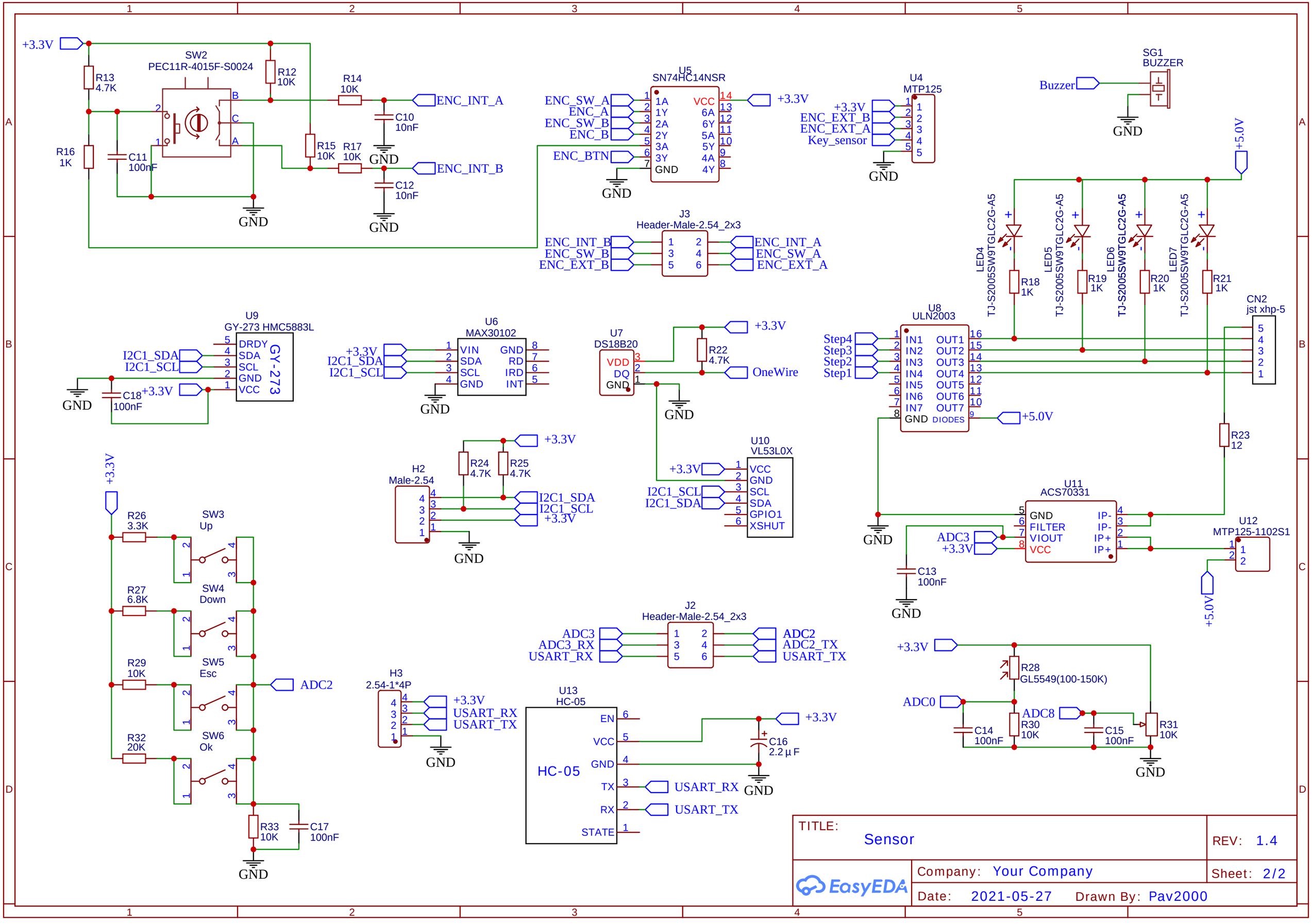
SW2
PEC11R-4015F-S0024
R13
4.7K
R12
10K
R14
10K
R15
10K
R17
10K
R16
1K
C11
100nF
C10
10nF
C12
10nF
ENC_INT_A
ENC_INT_B
GND
+3.3V
U5
SN74HC14NSR
ENC_SW_A
ENC_A
ENC_SW_B
ENC_B
ENC_BTN
U4
MTP125
ENC_EXT_B
ENC_EXT_A
Key_sensor
SG1
BUZZER
Buzzer
+5.0V
J3
Header-Male-2.54_2x3
ENC_EXT_B
ENC_SW_B
ENC_INT_B
ENC_SW_A
ENC_EXT_A
LED4
LED5
LED6
LED7
TJ-S2005SW9TGLC2G-A5
R18
1K
R19
1K
R20
1K
R21
1K
CN2
jst xhp-5
U9
GY-273 HMC5883L
I2C1_SDA
I2C1_SCL
DRDY
SDA
SCL
GND
VCC
GY-273
C18
100nF
U6
MAX30102
VIN
RD
IRD
INT
U7
DS18B20
VDD
DQ
R22
4.7K
OneWire
U8
ULN2003
Step4
Step3
Step2
Step1
IN1
IN2
IN3
IN4
IN5
IN6
IN7
OUT1
OUT2
OUT3
OUT4
OUT5
OUT6
OUT7
DIODES
R23
12
U10
VL53L0X
VCC
GPIO1
XSHUT
H2
Male-2.54
R24
4.7K
R25
4.7K
U11
ACS70331
FILTER
VIOUT
IP-
IP+
ADC3
C13
100nF
U12
MTP125-1102S1
R26
3.3K
SW3
Up
R27
6.8K
SW4
Down
R29
10K
SW5
Esc
R32
20K
SW6
Ok
ADC2
R33
10K
C17
100nF
J2
Header-Male-2.54_2x3
ADC3_RX
USART_RX
ADC2_TX
USART_TX
H3
2.54-1*4P
U13
HC-05
EN
STATE
C16
2.2μF
R28
GL5549(100-150K)
ADC0
ADC8
R30
10K
C14
100nF
C15
100nF
R31
10K
TITLE:
Sensor
REV: 1.4
Company: Your Company
Sheet: 2/2
Date: 2021-05-27
Drawn By: Pav2000
EasyEDA