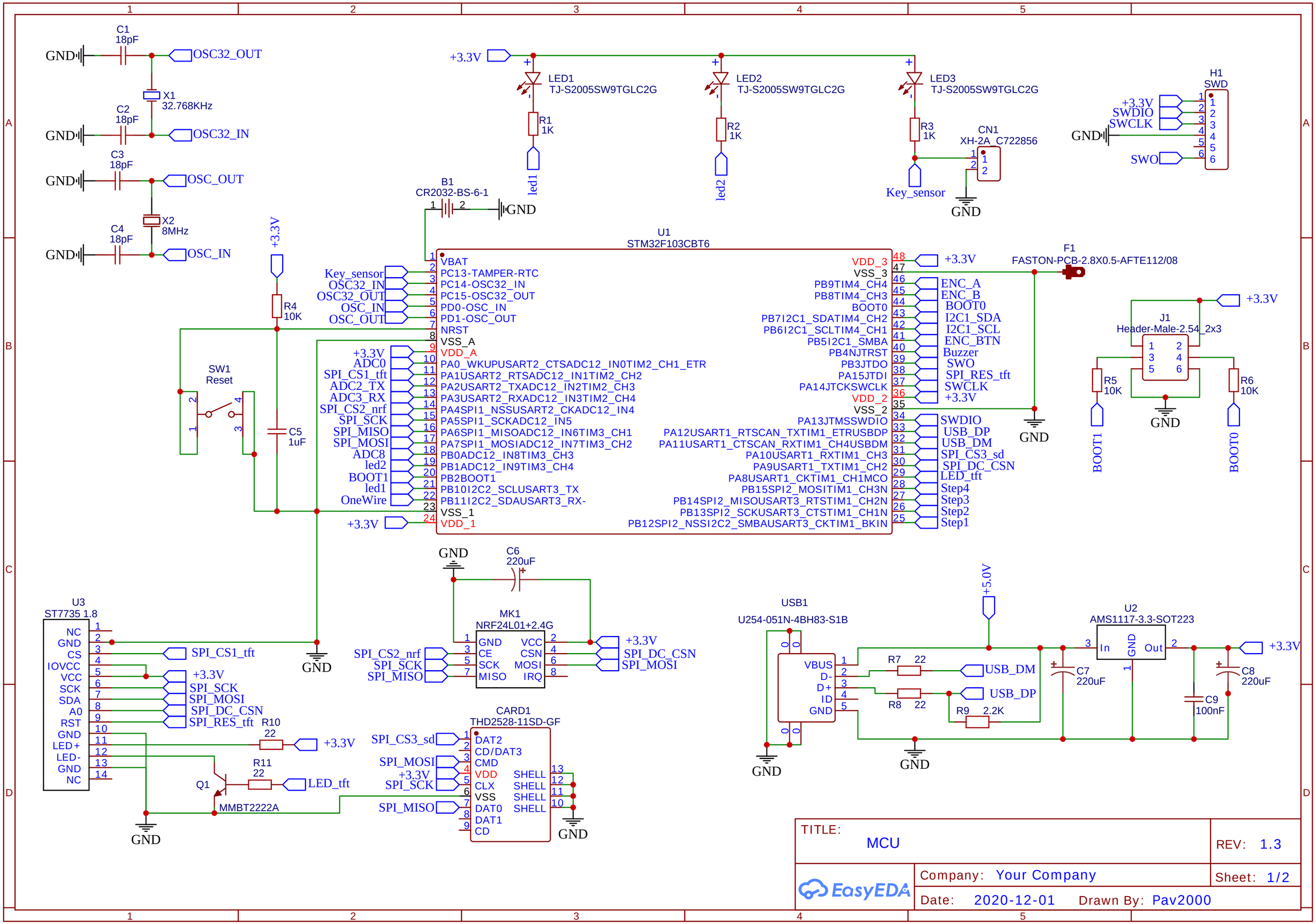
C1 18pF
C2 18pF
C3 18pF
C4 18pF
X1 32.768KHz
X2 8MHz
GND
OSC32_OUT
OSC32_IN
OSC_OUT
OSC_IN
+3.3V
LED1 TJ-S2005SW9TGLC2G
LED2 TJ-S2005SW9TGLC2G
LED3 TJ-S2005SW9TGLC2G
R1 1K
R2 1K
R3 1K
led1
led2
Key_sensor
CN1 XH-2A_C722856
H1 SWD
SWDIO
SWCLK
SWO
B1 CR2032-BS-6-1
U1 STM32F103CBT6
VBAT
PC13-TAMPER-RTC
PC14-OSC32_IN
PC15-OSC32_OUT
PD0-OSC_IN
PD1-OSC_OUT
NRST
VSS_A
VDD_A
PA0_WKUPUSART2_CTSADC12_IN0TIM2_CH1_ETR
PA1USART2_RTSADC12_IN1TIM2_CH2
PA2USART2_TXADC12_IN2TIM2_CH3
PA3USART2_RXADC12_IN3TIM2_CH4
PA4SPI1_NSSUSART2_CKADC12_IN4
PA5SPI1_SCKADC12_IN5
PA6SPI1_MISOADC12_IN6TIM3_CH1
PA7SPI1_MOSIADC12_IN7TIM3_CH2
PB0ADC12_IN8TIM3_CH3
PB1ADC12_IN9TIM3_CH4
PB2BOOT1
PB10I2C2_SCLUSART3_TX
PB11I2C2_SDAUSART3_RX-
VSS_1
VDD_1
VDD_3
VSS_3
PB9TIM4_CH4
PB8TIM4_CH3
BOOT0
PB7I2C1_SDATIM4_CH2
PB6I2C1_SCLTIM4_CH1
PB5I2C1_SMBA
PB4NJTRST
PB3JTDO
PA15JTDI
PA14JTCKSWCLK
VDD_2
VSS_2
PA13JTMSSWDIO
PA12USART1_RTSCAN_TXTIM1_ETRUSBDP
PA11USART1_CTSCAN_RXTIM1_CH4USBDM
PA10USART1_RXTIM1_CH3
PA9USART1_TXTIM1_CH2
PA8USART1_CKTIM1_CH1MCO
PB15SPI2_MOSITIM1_CH3N
PB14SPI2_MISOUSART3_RTSTIM1_CH2N
PB13SPI2_SCKUSART3_CTSTIM1_CH1N
PB12SPI2_NSSI2C2_SMBAUSART3_CKTIM1_BKIN
ENC_A
ENC_B
BOOT0
I2C1_SDA
I2C1_SCL
ENC_BTN
Buzzer
SWO
SPI_RES_tft
SWCLK
SWDIO
USB_DP
USB_DM
SPI_CS3_sd
SPI_DC_CSN
LED_tft
Step4
Step3
Step2
Step1
ADC0
SPI_CS1_tft
ADC2_TX
ADC3_RX
SPI_CS2_nrf
SPI_SCK
SPI_MISO
SPI_MOSI
ADC8
OneWire
R4 10K
C5 1uF
SW1 Reset
F1 FASTON-PCB-2.8X0.5-AFTE112/08
J1 Header-Male-2.54_2x3
R5 10K
R6 10K
BOOT1
BOOT0
C6 220uF
MK1 NRF24L01+2.4G
GND
CE
SCK
MISO
VCC
CSN
MOSI
IRQ
U3 ST7735 1.8
NC
CS
IOVCC
SDA
A0
RST
LED+
LED-
R10 22
R11 22
Q1
MMBT2222A
CARD1 THD2528-11SD-GF
DAT2
CD/DAT3
CMD
VDD
CLX
VSS
DAT0
DAT1
CD
SHELL
USB1 U254-051N-4BH83-S1B
VBUS
D-
D+
ID
R7 22
R8 22
R9 2.2K
+5.0V
U2 AMS1117-3.3-SOT223
In
Out
C7 220uF
C8 220uF
C9 100nF
TITLE: MCU
REV: 1.3
Company: Your Company
Sheet: 1/2
Date: 2020-12-01
Drawn By: Pav2000
EasyEDA

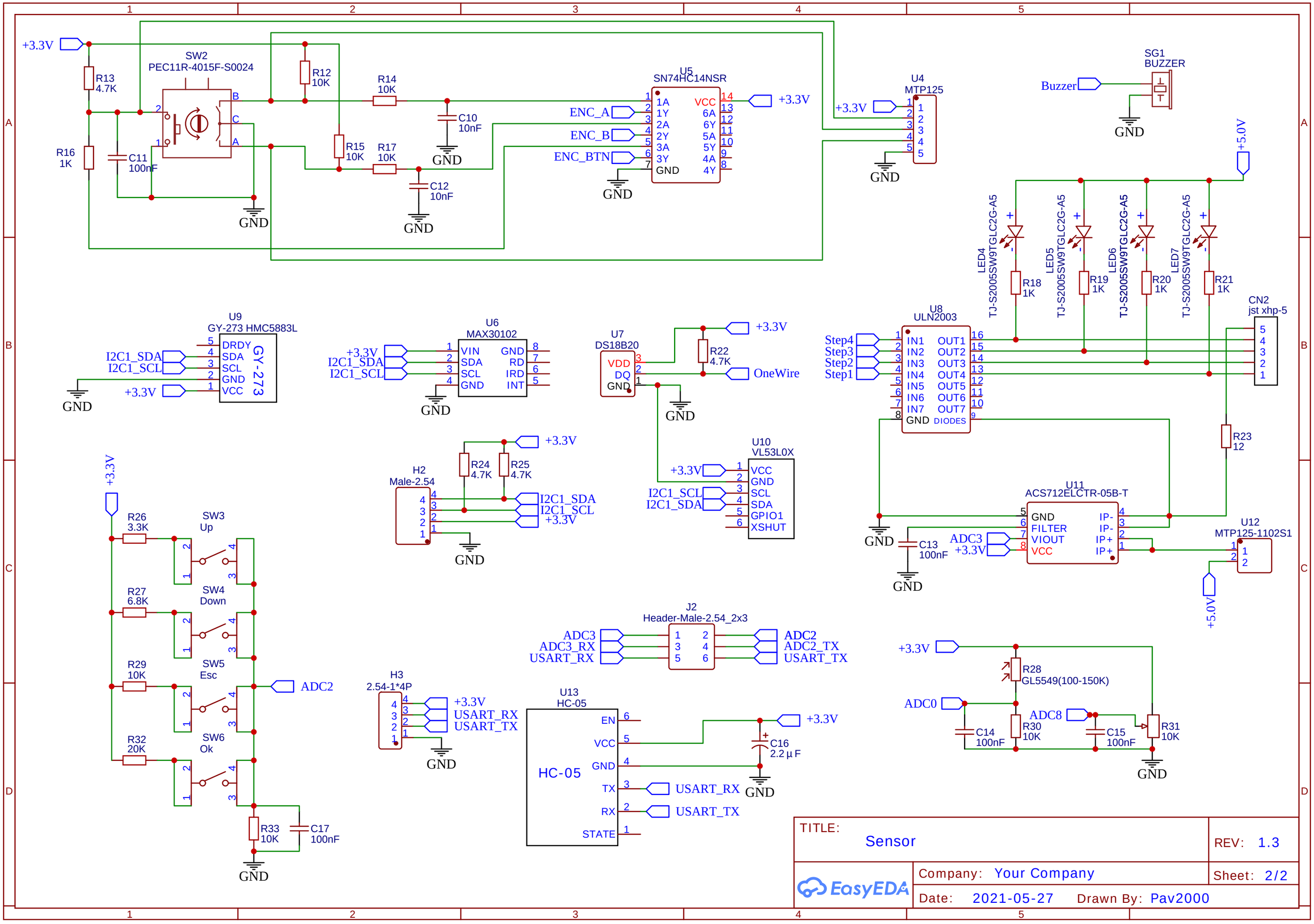
+3.3V
R13
4.7K
SW2
PEC11R-4015F-S0024
R12
10K
R14
10K
C10
10nF
R16
1K
C11
100nF
R15
10K
R17
10K
C12
10nF
GND
U5
SN74HC14NSR
ENC_A
ENC_B
ENC_BTN
1A
1Y
2A
2Y
3A
3Y
GND
VCC
6A
6Y
5A
5Y
4A
4Y
U4
MTP125
SG1
BUZZER
Buzzer
+5.0V
LED4
TJ-S2005SW9TGLC2G-A5
LED5
TJ-S2005SW9TGLC2G-A5
LED6
TJ-S2005SW9TGLC2G-A5
LED7
TJ-S2005SW9TGLC2G-A5
R18
1K
R19
1K
R20
1K
R21
1K
CN2
jst xhp-5
U9
GY-273 HMC5883L
DRDY
SDA
SCL
GND
VCC
GY-273
I2C1_SDA
I2C1_SCL
U6
MAX30102
VIN
SDA
SCL
GND
GND
RD
IRD
INT
U7
DS18B20
VDD
DQ
GND
R22
4.7K
OneWire
U8
ULN2003
Step4
Step3
Step2
Step1
IN1
IN2
IN3
IN4
IN5
IN6
IN7
GND
DIODES
OUT1
OUT2
OUT3
OUT4
OUT5
OUT6
OUT7
R23
12
H2
Male-2.54
R24
4.7K
R25
4.7K
U10
VL53L0X
VCC
GND
SCL
SDA
GPIO1
XSHUT
U11
ACS712ELCTR-05B-T
FILTER
VIOUT
VCC
IP-
IP+
C13
100nF
ADC3
U12
MTP125-1102S1
R26
3.3K
SW3
Up
R27
6.8K
SW4
Down
R29
10K
SW5
Esc
R32
20K
SW6
Ok
ADC2
R33
10K
C17
100nF
H3
2.54-1*4P
USART_RX
USART_TX
J2
Header-Male-2.54_2x3
ADC3
ADC3_RX
USART_RX
ADC2
ADC2_TX
USART_TX
U13
HC-05
EN
VCC
GND
TX
RX
STATE
C16
2.2μF
R28
GL5549(100-150K)
ADC0
ADC8
R30
10K
C14
100nF
C15
100nF
R31
10K
TITLE:
Sensor
REV: 1.3
Company: Your Company
Sheet: 2/2
Date: 2021-05-27
Drawn By: Pav2000
EasyEDA