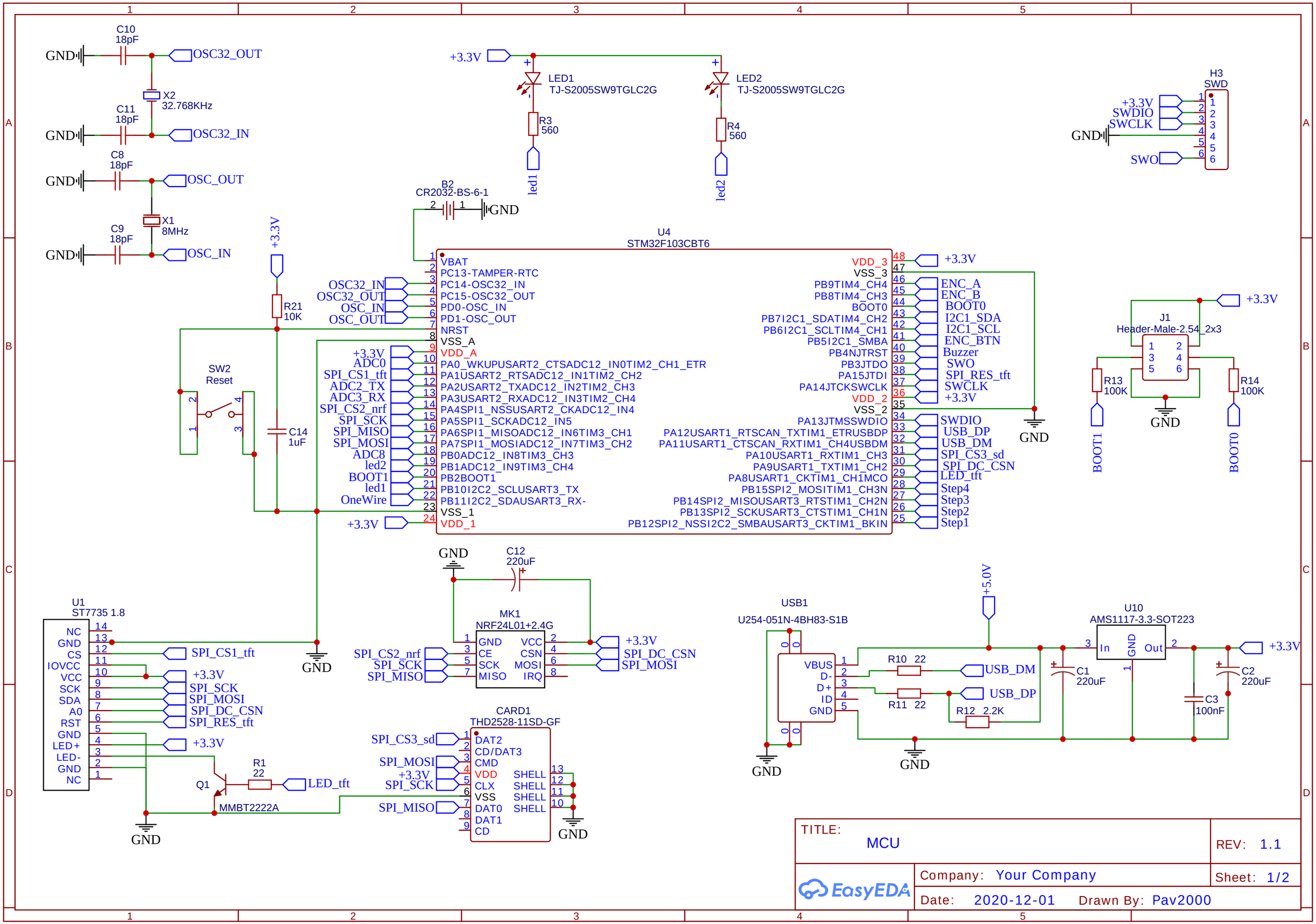
C10
18pF
GND
OSC32_OUT
X2
32.768KHz
C11
18pF
GND
OSC32_IN
C8
18pF
GND
OSC_OUT
X1
8MHz
C9
18pF
GND
OSC_IN
+3.3V
LED1
TJ-S2005SW9TGLC2G
R3
560
led1
LED2
TJ-S2005SW9TGLC2G
R4
560
led2
H3
SWD
+3.3V
SWDIO
SWCLK
GND
SWO
B2
CR2032-BS-6-1
GND
U4
STM32F103CBT6
VBAT
PC13-TAMPER-RTC
PC14-OSC32_IN
PC15-OSC32_OUT
PD0-OSC_IN
PD1-OSC_OUT
NRST
VSS_A
VDD_A
PA0_WKUPUSART2_CTSADC12_IN0TIM2_CH1_ETR
PA1USART2_RTSADC12_IN1TIM2_CH2
PA2USART2_TXADC12_IN2TIM2_CH3
PA3USART2_RXADC12_IN3TIM2_CH4
PA4SPI1_NSSUSART2_CKADC12_IN4
PA5SPI1_SCKADC12_IN5
PA6SPI1_MISOADC12_IN6TIM3_CH1
PA7SPI1_MOSIADC12_IN7TIM3_CH2
PB0ADC12_IN8TIM3_CH3
PB1ADC12_IN9TIM3_CH4
PB2BOOT1
PB10I2C2_SCLUSART3_TX
PB11I2C2_SDAUSART3_RX-
VSS_1
VDD_1
VDD_3
VSS_3
PB9TIM4_CH4
PB8TIM4_CH3
BOOT0
PB7I2C1_SDATIM4_CH2
PB6I2C1_SCLTIM4_CH1
PB5I2C1_SMBA
PB4NJTRST
PB3JTDO
PA15JTDI
PA14JTCKSWCLK
VDD_2
VSS_2
PA13JTMSSWDIO
PA12USART1_RTSCAN_TXTIM1_ETRUSBDP
PA11USART1_CTSCAN_RXTIM1_CH4USBDM
PA10USART1_RXTIM1_CH3
PA9USART1_TXTIM1_CH2
PA8USART1_CKTIM1_CH1MCO
PB15SPI2_MOSITIM1_CH3N
PB14SPI2_MISOUSART3_RTSTIM1_CH2N
PB13SPI2_SCKUSART3_CTSTIM1_CH1N
PB12SPI2_NSSI2C2_SMBAUSART3_CKTIM1_BKIN
OSC32_IN
OSC32_OUT
OSC_IN
OSC_OUT
+3.3V
ADC0
SPI_CS1_tft
ADC2_TX
ADC3_RX
SPI_CS2_nrf
SPI_SCK
SPI_MISO
SPI_MOSI
ADC8
led2
BOOT1
led1
OneWire
+3.3V
ENC_A
ENC_B
BOOT0
I2C1_SDA
I2C1_SCL
ENC_BTN
Buzzer
SWO
SPI_RES_tft
SWCLK
+3.3V
SWDIO
USB_DP
USB_DM
SPI_CS3_sd
SPI_DC_CSN
LED_tft
Step4
Step3
Step2
Step1
GND
R21
10K
SW2
Reset
C14
1uF
J1
Header-Male-2.54_2x3
+3.3V
R13
100K
R14
100K
GND
BOOT1
BOOT0
GND
C12
220uF
MK1
NRF24L01+2.4G
GND
CE
SCK
MISO
VCC
CSN
MOSI
IRQ
SPI_CS2_nrf
SPI_SCK
SPI_MISO
+3.3V
SPI_DC_CSN
SPI_MOSI
U1
ST7735 1.8
NC
GND
CS
IOVCC
VCC
SCK
SDA
A0
RST
GND
LED+
LED-
GND
NC
SPI_CS1_tft
+3.3V
SPI_SCK
SPI_MOSI
SPI_DC_CSN
SPI_RES_tft
+3.3V
R1
22
Q1
MMBT2222A
LED_tft
GND
CARD1
THD2528-11SD-GF
DAT2
CD/DAT3
CMD
VDD
CLX
VSS
DAT0
DAT1
CD
SHELL
SHELL
SHELL
SHELL
SPI_CS3_sd
SPI_MOSI
+3.3V
SPI_SCK
SPI_MISO
GND
USB1
U254-051N-4BH83-S1B
VBUS
D-
D+
ID
GND
GND
+5.0V
R10 22
R11 22
R12 2.2K
USB_DM
USB_DP
C1
220uF
GND
U10
AMS1117-3.3-SOT223
In
GND
Out
+3.3V
C2
220uF
C3
100nF
TITLE:
MCU
REV: 1.1
Company: Your Company
Sheet: 1/2
Date: 2020-12-01
Drawn By: Pav2000
EasyEDA

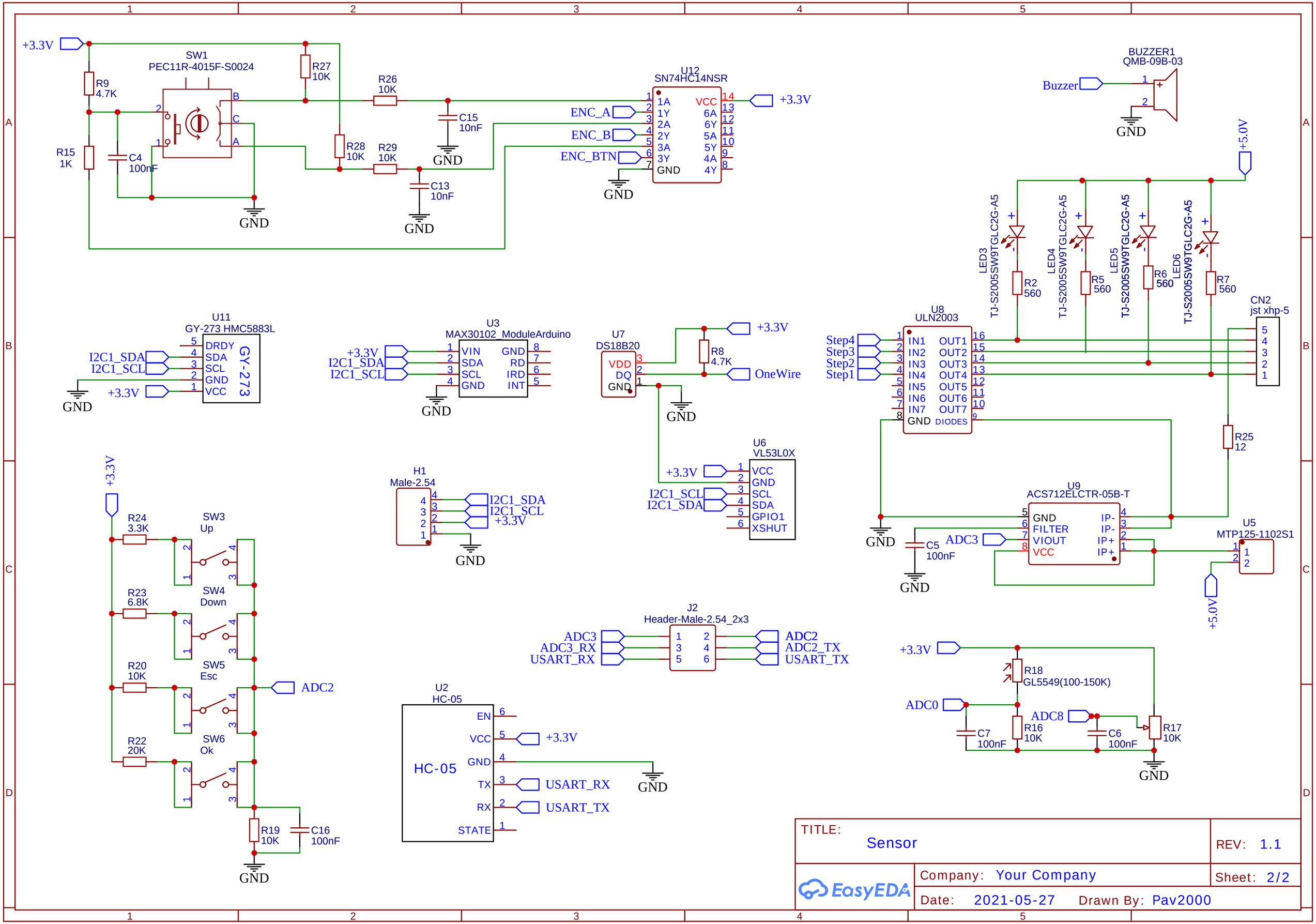

TITLE: Sensor	REV: 1.1
Company: Your Company	Sheet: 2/2
Date: 2021-05-27 Drawn By: Pav2000	