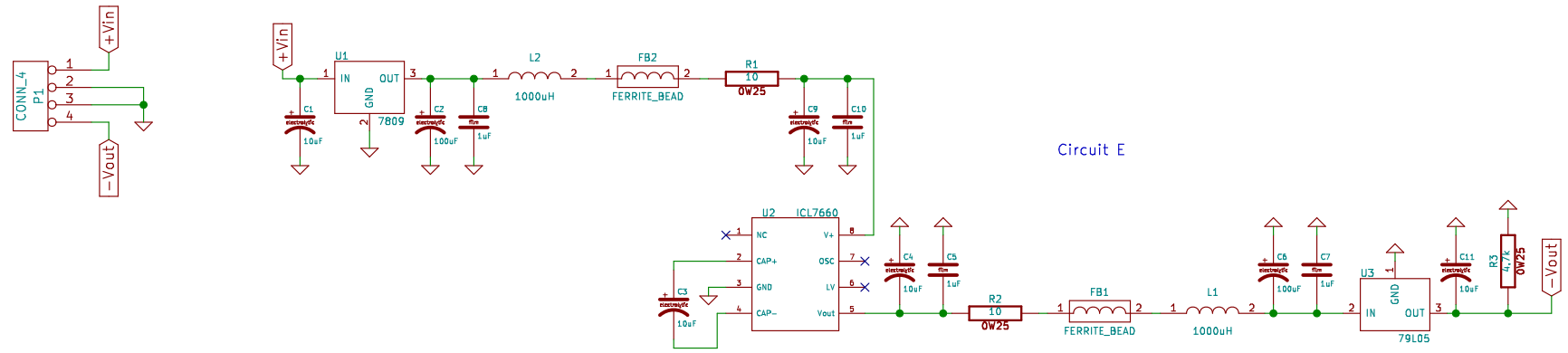

Sheet: /
File: ICL7660.sch

Title:

Size: USLedger	Date: 2 aug 2014	**Rev:**
KiCad E.D.A. kicad 4.0.5+dfsg1-4bpo8+1		Id: 1/1