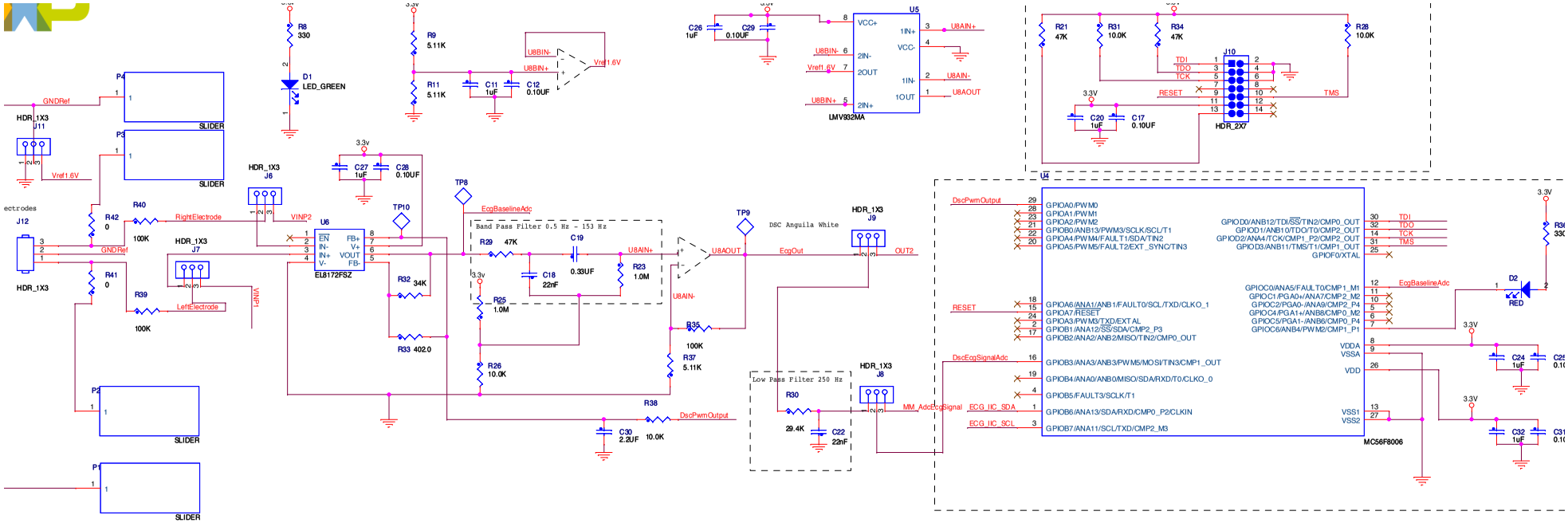

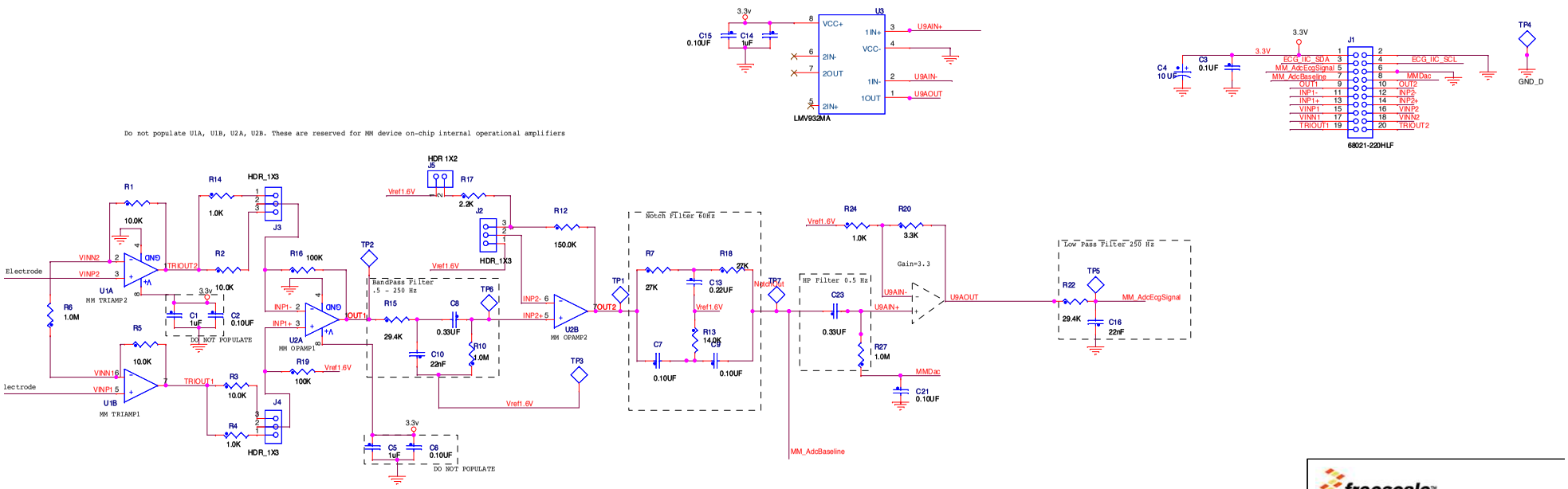

freescale semiconductor

ICAP Classification:	FCP: ___	FIUO: X	PUBI: ___
Drawing Title:	MED-EKG		
Page Title:	EKG Instrumentation & DSC		
Size C	Document Number SCH-26527 PDF: SPF-26527		
Date: Tuesday, August 03, 2010		Sheet 3 of 3	