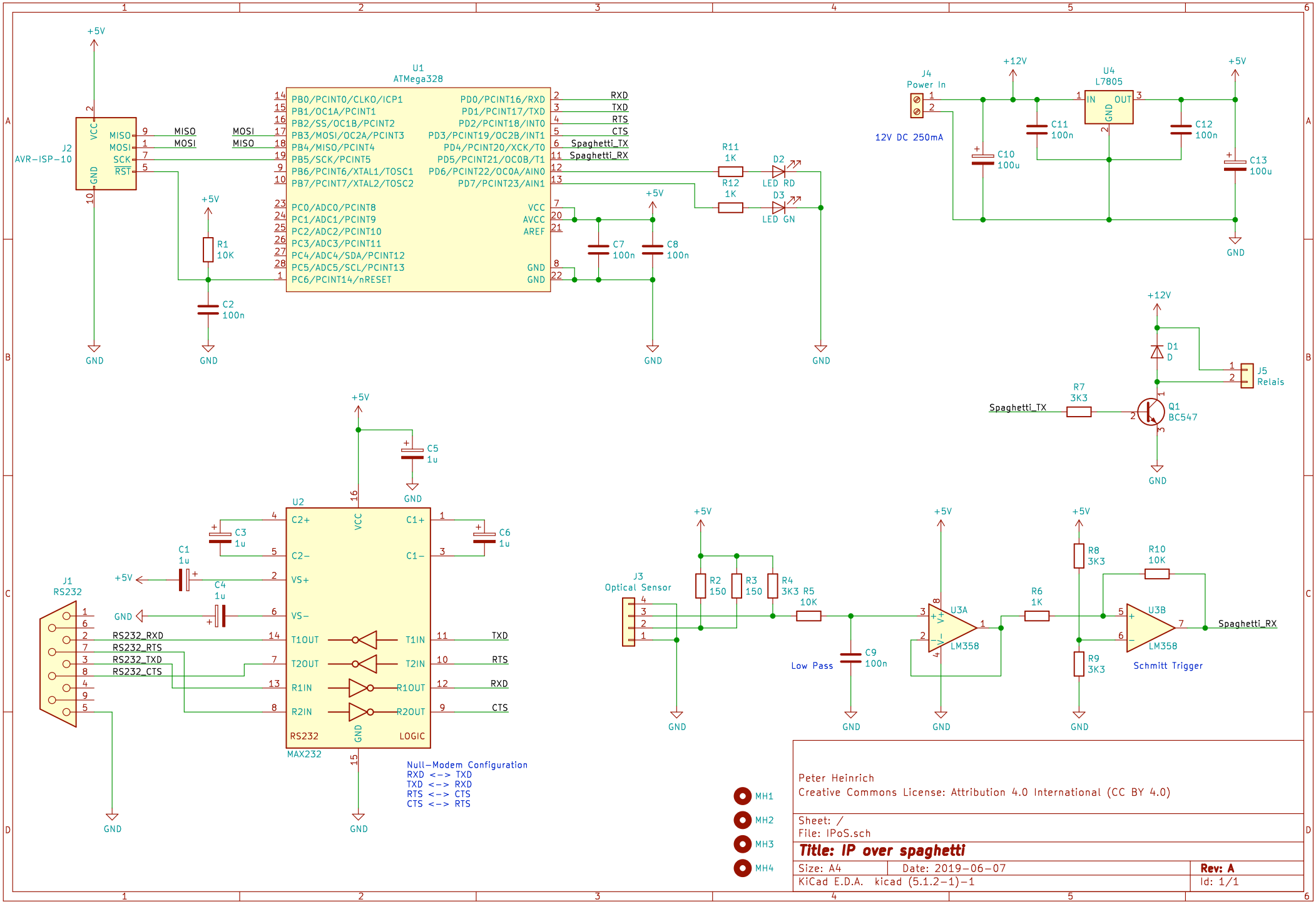

Peter Heinrich
Creative Commons License: Attribution 4.0 International (CC BY 4.0)

Sheet: /
File: IPoS.sch

Title: IP over spaghetti

Size: A4	Date: 2019-06-07	Rev: A
KiCad E.D.A. kicad (5.1.2-1)-1		Id: 1/1