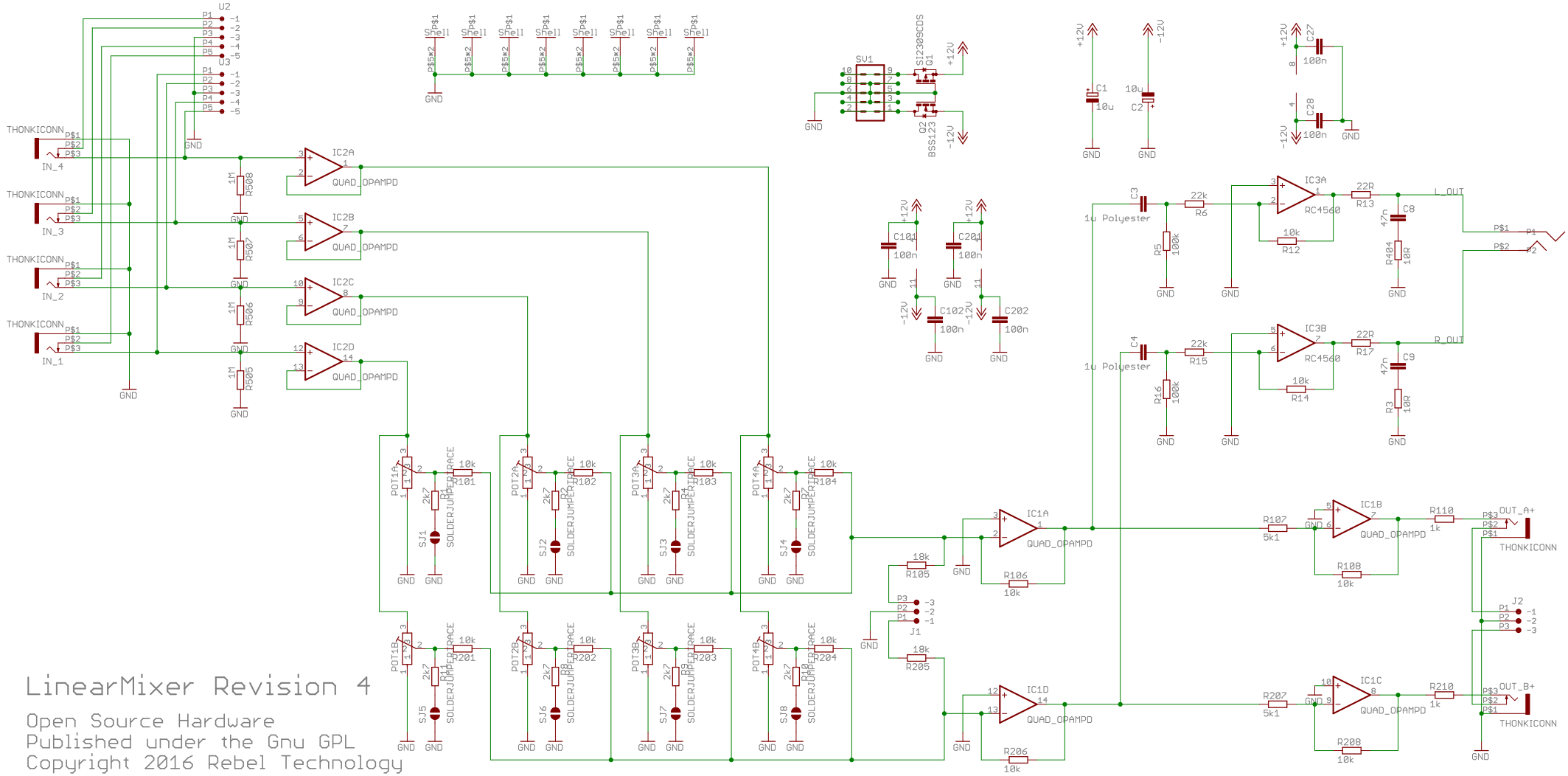

LinearMixer Revision 4

Open Source Hardware
Published under the Gnu GPL
Copyright 2016 Rebel Technology