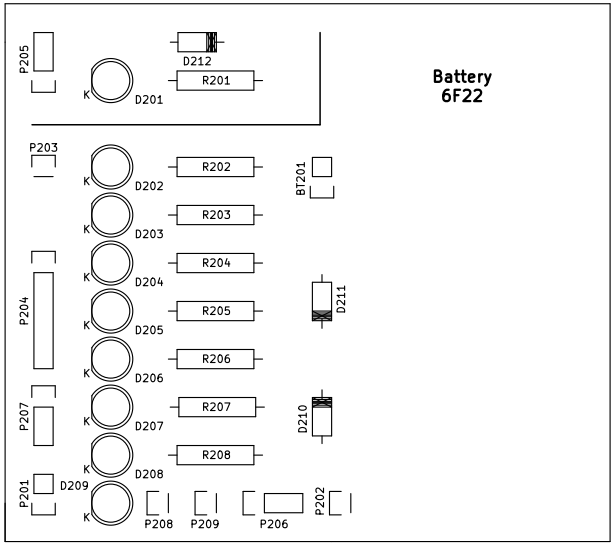

Display board

Pozsar Zsolt – http://www.pozsarzs.hu

Sheet:

File: display.kicad_pcb

Title: MM6D Grow house control device

Size: A4	Date: 2024-04-23	**Rev: 231006**
KiCad E.D.A. kicad 5.1.5+dfsg1-2build2		Id: 1/1