MM8D Central controlling device

Technical manual

Hardware version: v210326
MM8D software version: v0.3
Technical manual version: v2.0
Issue date: 2022.03.30.
Drawing number: 59/13/1

Content

I. Hardware....3

1. Technical data....4
2. General description....4
3. Schematic and PCB drawings....4
4. Other drawings and documents....4
5. Terms of use....4
6. Look of board....5
    a) Manuals and connectors....5
    b) Jumpers....5
    c) Pinout of connectors....6
    d) Connect to computer....7
    e) Connect to environment....7
7. Downloadable documentation....8

II. Software....9

1. General description....10
2. Prepare installation....10
3. Download....11
4. Installation....11
5. Files of program....11
6. Setup....13
7. Using the device....14
8. Terms of use....14
9. Screenshots....14
10. Downloadable software package....17

III. Related links....18

1. Hardware....19
2. Software....19
3. Terms of use....19
4. Developer and manufacturer....19

IV. Annexes....20

Content....21

I. Hardware

1. Technical data

Supply voltage:	3.3/5 V DC SELV
Supply current:	max. 1 A
Isolation class:	Class 0
Mechanical size:	240 x 60 x 25 mm
IP protection:	IP 00
Mass of cover:	termoplast (PC), only top cover

2. General description

The device consists of two parts: the control computer and the adapter card. The card can also be connected to 3.3V and 5V TTL systems. The control program is designed for PC and Raspberry Pi, the interface PC is connected to the LPT port, in the second case to the GPIO port. The adapter card has four 24V DC, galvanically isolated, polarity-protected inputs. Of the eight outputs, four are morse-contact relay outputs and four are open collector outputs for lower load (e.g., LED). The load capacity of the relay output is 5A (max. 240V AC or 100V DC), the load capacity of the open collector outputs is 80 mA (max. 24V DC).

3. Schematic and PCB drawings

The wiring diagrams of the device is shown in Annex 1, PCB drawings are in Annex 2-4. You can download it as part of the complete documentation or in separate PDF, SVG and KiCAD formats from the developer/manufacturer's website. The Gerber files needed for production are included in the package.

4. Other drawings and documents

Documentation package contents mechanical drawing of top cover.

5. Terms of use

Hardware documentation can be modified and/or redistributed under the Creativ Commons 4.0 Attribution Non-Commercial (CC-BY-NC-4.0) License. You can read the full text of the license online. (Refer to Chapter III for references.)

6. Look of board

a) Manuals and connectors

1. LEDs of input #1-4
2. LEDs of relay output #1-4
3. LEDs of LED output #1-4
4. LEDs of power inputs
5. J1 connector - inputs
6. J2 connector - to computer
7. J3 connector - from power supply
8. J4 connector - from computer
9. J5 connector - from computer
10. J6 connector - contactors of relay output #1
11. J7 connector - contactors of relay output #2
12. J8 connector - contactors of relay output #3
13. J9 connector - contactors of relay output #4
14. J10 connector - LED outputs #1-4
15. Mounting holes
16. Jumpers

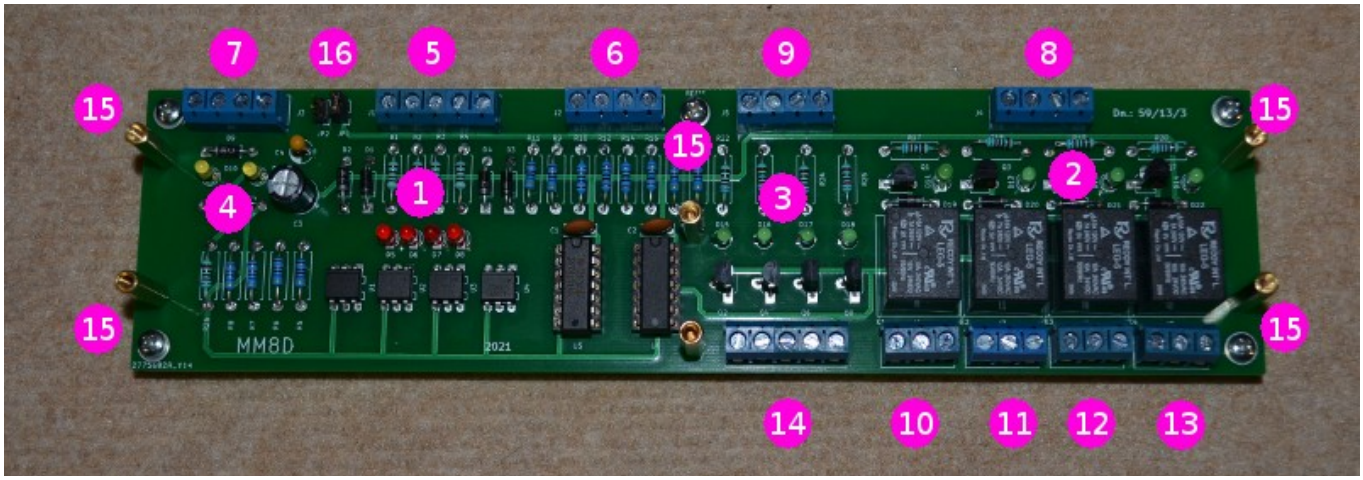

Figure 1: Manuals and connectors

b) Jumpers

sign	function	
	for PC (LPT port)	**for Rasperrry Pi (GPIO port)**
JP1	CLOSE	OPEN
JP2	OPEN	CLOSE

c) Pinout of connectors

sign	pin	function		voltage level
J1	1	input #1	I1	+24 V
	2	input #2	I2	+24 V
	3	input #3	I3	+24 V
	4	input #4	I4	+24 V
	5	common	ICOM	
J2	1	input #1 to computer	I1C	+3.3/5 V
	2	input #2 to computer	I2C	+3.3/5 V
	3	input #3 to computer	I3C	+3.3/5 V
	4	input #4 to computer	I4C	+3.3/5 V
J3	1	power voltage input	+5 V	+5 V
	2	GND	GND	
	3	GND	GND	
	4	power voltage input	+3.3 V	+3.3 V
J4	1	relay output #1 from computer	RO1C	+3.3/5 V
	2	relay output #2 from computer	RO2C	+3.3/5 V
	3	relay output #3 from computer	RO3C	+3.3/5 V
	4	relay output #4 from computer	RO4C	+3.3/5 V
J5	1	LED output #1 from computer	LO1C	+3.3/5 V
	2	LED output #2 from computer	LO2C	+3.3/5 V
	3	LED output #3 from computer	LO3C	+3.3/5 V
	4	LED output #4 from computer	LO4C	+3.3/5 V
J6-9	1	relay contactor NO	RO?NO	
	2	relay contactor COM	RO?COM	
	3	relay contactor NC	RO?NC	
J10	1	LED output #1 (open collector)	LO1	
	2	LED output #2 (open collector)	LO2	
	3	LED output #3 (open collector)	LO3	
	4	LED output #4 (open collector)	LO4	
	5	GND	GND	

d) Connect to computer

MM8D			Raspberry Pi			PC		
sign	**pin**	**function**	**sign**	**pin**	**function**	**sign**	**pin**	**function**
J2	1	I1C	GPIO port	3	GPIO02	LPT port	15	-ERROR
	2	I2C		5	GPIO03		13	SELECT
	3	I3C		7	GPIO04		12	PE
	4	I4C		11	GPIO17		10	-ACK
J3	1	+5 V		2	+5 V	power supply		+5 V
	2	GND		6	GND			GND
	3	GND		9	GND	LPT port	25	GND
	4	+3.3 V		17	+3.3 V		-	-
J4	1	RO1C		12	GPIO18		2	DO
	2	RO2C		16	GPIO23		3	D1
	3	RO3C		18	GPIO24		4	D2
	4	RO4C		22	GPIO25		5	D3
J5	1	LO1C		32	GPIO12		6	D4
	2	LO2C		36	GPIO16		7	D5
	3	LO3C		38	GPIO20		8	D6
	4	LO4C		40	GPIO21		9	D7

e) Connect to environment

sign	pin	function	source/target
J1	1	I1	mains overcurrent breakers
	2	I2	water pressure sensor (low pressure)
	3	I3	water pressure sensor (high pressure)
	4	I4	(unused)
	5	ICOM	common
J6	1-3	RO1	alarm output to alarm device
J7	1-3	RO2	valve control #1 of irrigator
J8	1-3	RO3	valve control #2 of irrigator
J9	1-3	RO4	valve control #3 of irrigator
J10	1	LO1	ACTIVE light (blue)
	2	LO2	WARNING light (yellow)
	3	LO3	ERROR light (red)
	4	LO4	WATER PUMP ERROR light (red)
	5	GND	GND

7. Downloadable documentation

The complete documentation of the hardware in the .tar.gz format compressed file can be downloaded from the manufacturer's website or Github. (Refer to Chapter III for references.) Name of package is: *mm8d-hw-210326-2.0.tar.gz.*

Content of package - only important files:

```
mm8d-hw
      ├──cad_files                  KiCAD files
      │     mm8d.pro                    project file
      │     mm8d.sch                    schematic drawing
      │     mm8d.kicad_pcb              PCB drawing
      │     mm8d.drl                    drilling file
      │     mm8d-*.gbr                  Gerber files
      ├──documents                  documentation
      │      mm8d_en.pdf                Technical manual
      │      pcb_*.pdf                  pcb drawings
      │      sch_*.pdf                  schematic drawings
      ├──pictures                   pictures
      │      mm8d.jpg                   look of the unit
      │      pcb_*.svg                  PCB drawings
      │      sch_*.svg                  schematic drawings
      │
      ├──LICENCE                    terms of use
      └──README.md                  short description
```

II. Software

1. General description

The software consists of five main parts:

Operating daemon

The connected MM6D and MM7D electrical equipment is controlled by a Python program that runs as a service in the background. Utilities are Bash shell programs, configuration files are in text (INI) format. The configuration program has a full screen character interface, its source code (FreePascal) is only included in the tar.gz package. This part of the software is included in the tar.gz and *mm8d-sw* Debian packages.

Environmental characteristics adjustment program

The setup program has a full screen character interface, its source code (FreePascal) is included in the tar.gz package only. This part of the software is included in the tar.gz package and the *mm8d-eec* Debian package.

Web interface

Data access is provided by CGI programs written in Perl, its Bash shell utility, and web content consists of static HTML files. This requires an Apache2 web server. This part of the software is included in the tar.gz package and the *mm8d-web* Debian package.

Hardware checker program

This Python program can be used to verify that the hardware is working properly. Before testing running service of the software must be stopped. This part of the software is included in the tar.gz package and the *mm8d-sw* Debian package.

2. Prepare installation

Before installing the program, you need to install Raspbian OS Lite on your Raspberry Pi and Debian GNU/Linux on PC. Remember to change the default password for user pi, set the device name (hostname) and access to the local network. For easy remote access, use a permanent IP address or set up an IP address assignment on your router.

Prepare operation system:

```
user@localhost$ sudo apt-get update
user@localhost$ sudo apt-get upgrade
```

```
user@localhost$ sudo apt-get install git wget
user@localhost$ sudo echo "deb http://www.szerafingomba.hu/deb/ ./" >> /etc/apt/sources.list
user@localhost$ sudo wget -q -O - http://www.szerafingomba.hu/deb/KEY.gpg | apt-key add -
user@localhost$ sudo apt-get update
user@localhost$ mkdir $HOME/download
```

3. Download

Download program from homepage:

```
user@localhost$ cd $HOME/download
user@localhost$ wget http://www.szerafingomba.hu/softwares/mm8d/mm8d-sw-0.3-armhf.tar.gz
user@localhost$ tar -xzf mm8d-sw-0.3-armhf.tar.gz
```

(Note: on PC use *amd64* or *i386* instead *armhf*.)

Download latest version of program from Github:

```
user@localhost$ cd $HOME/download
user@localhost$ git clone http://github.com/pozsarzs/mm8d-sw.git
```

4. Installation

```
user@localhost$ cd mm8d-sw
user@localhost$ ./prepare
user@localhost$ ./install
```

Download and install with package manager:

```
user@localhost$ sudo apt-get install mm8d-sw mm8d-web mm8d-eec
```

5. Files of program

The program's installed and runtime created files, with explanations of important files for the user and the purpose of symbolic links:

```
/
├──etc
│     ├──cron.d
│     │     mm8d-sw
│     │     mm8d-web
│     ├──init.d
│     │     mm8d.sh
│     ├──rc0.d
│     │     K01mm8d.sh                » /etc/init.d/mm8d.sh
│     ├──rc2.d
│     │     S01mm8d.sh                » /etc/init.d/mm8d.sh
│     ├──rc3.d
│     │     S01mm8d.sh                » /etc/init.d/mm8d.sh
│     ├──rc4.d
│     │     S01mm8d.sh                » /etc/init.d/mm8d.sh
│     ├──rc5.d
│     │     S01mm8d.sh                » /etc/init.d/mm8d.sh
│     ├──rc6.d
```

```
│    │    K01mm8d.sh                          │ » /etc/init.d/mm8d.sh
│    ├───systemd                              │
│    │    └───system                          │
│    │         mm8d.service                   │
│    └───motd                                 │
├───usr                                       │
│    ├───lib                                  │
│    │    └───cgi                             │
│    │         getdata.cgi                    │ CGI programs
│    │         getenvirconf.cgi               │
│    │         getpage.cgi                    │
│    └───local                                │
│         ├───bin                             │
│         │    mm8d.py                        │ daemon program
│         │    mm8d-creatediagrams            │ diagram creator
│         │    mm8d-editenvirconf             │ edit envir. characteristics
│         │    mm8d-editenvirconf.bin         │ settings editor
│         │    mm8d-editirrconf.bin           │ settings editor
│         │    mm8d-editmainconf              │ edit program settings
│         │    mm8d-editmainconf.bin          │ settings editor
│         │    mm8d-getsnapshots              │ camera picture downloader
│         │    mm8d-hwtest.py                 │ hardware checker
│         │    mm8d-maintainlog               │ maintain log
│         │    mm8d-override                  │ override outputs
│         │    mm8d-override.bin              │ override program
│         │    mm8d-startdaemon               │ start daemon
│         │    mm8d-statusofdaemon            │ show status of daemon
│         │    mm8d-stopdaemon                │ stop daemon
│         │    mm8d-updatestartpage           │ update startpage
│         │    mm8d-viewlog                   │ show logfile
│         │    mm8d-webpage                   │ show web interface
│         ├───etc                             │
│         │    └───mm8d                       │
│         │         envir-ch?.ini             │ envir. characteristics settings
│         │         irrigator.ini             │ irrigator settings
│         │         mm8d.ini                  │ program settings
│         └───share                           │
│              ├───doc                        │
│              │    └───mm8d                  │
│              │         AUTHORS              │ author(s)
│              │         COPYING              │ terms of use (EN)
│              │         INSTALL.pc           │ installation instruction
│              │         INSTALL.raspi        │ installation instruction
│              │         README               │ information (EN)
│              │         VERSION              │ version
│              │         cgiprogs.txt         │ about CGI programs
│              │         changelog            │ log of changes
│              │         connecting.txt       │ about connecting device
│              │         copyright            │ copyright information
│              │         exitcodes.txt        │ about exit codes
│              │         logfiles.txt         │ about logfiles
│              ├───locale                     │
│              │    └───??                    │
│              │         mm8d.msg             │ message files
│              ├───man                        │
│              │    ├───man1                  │ manual pages (EN)
│              │    │ mm8d-creatediagrams.1.gz │
│              │    │ mm8d-editenvirconf.1.gz │
│              │    │ mm8d-editmainconf.1.gz  │
│              │    │ mm8d-getsnapshots.1.gz  │
│              │    │ mm8d-hwtest.py.1.gz     │
│              │    │ mm8d-maintainlog.1.gz   │
```

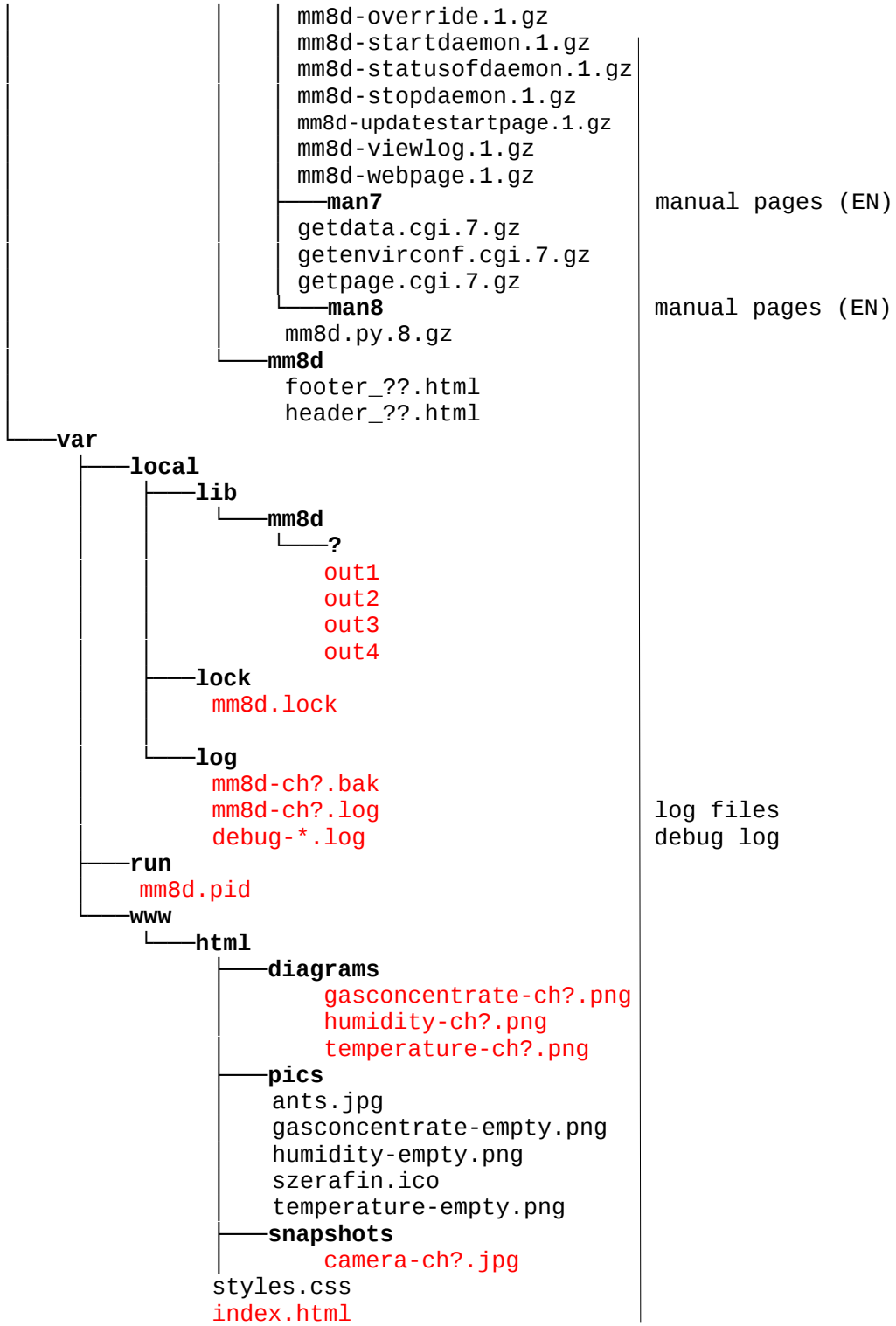

When installing with package manager, the program is installed to */usr* instead of */usr/local*.

6. Setup

Both configuration shell programs will stop the running service of MM8D, then open the editor and then start them after closing.

To set the program:

```
user@locahost$ mm8d-editmainconf
```

To set the environmental characteristic and irrigator settings:

```
user@locahost$ mm8d-editenvirconf
```

7. Using the device

The device operates automatically after installation and setup and does not require any human intervention. The status of the growing site can be checked with a web browser, and settings can be made by logging via LAN with SSH client.

8. Terms of use

These programs are free softwares: you can redistribute they and/or modify they under the terms of the European Union Public License 1.1 version.

These programs are distributed in the hope that they will be useful, but WITHOUT ANY WARRANTY; without even the implied warranty of MERCHANTABILITY or FITNESS FOR A PARTICULAR PURPOSE. You can read the full text of the license online. (Refer to Chapter III for references.)

9. Screenshots

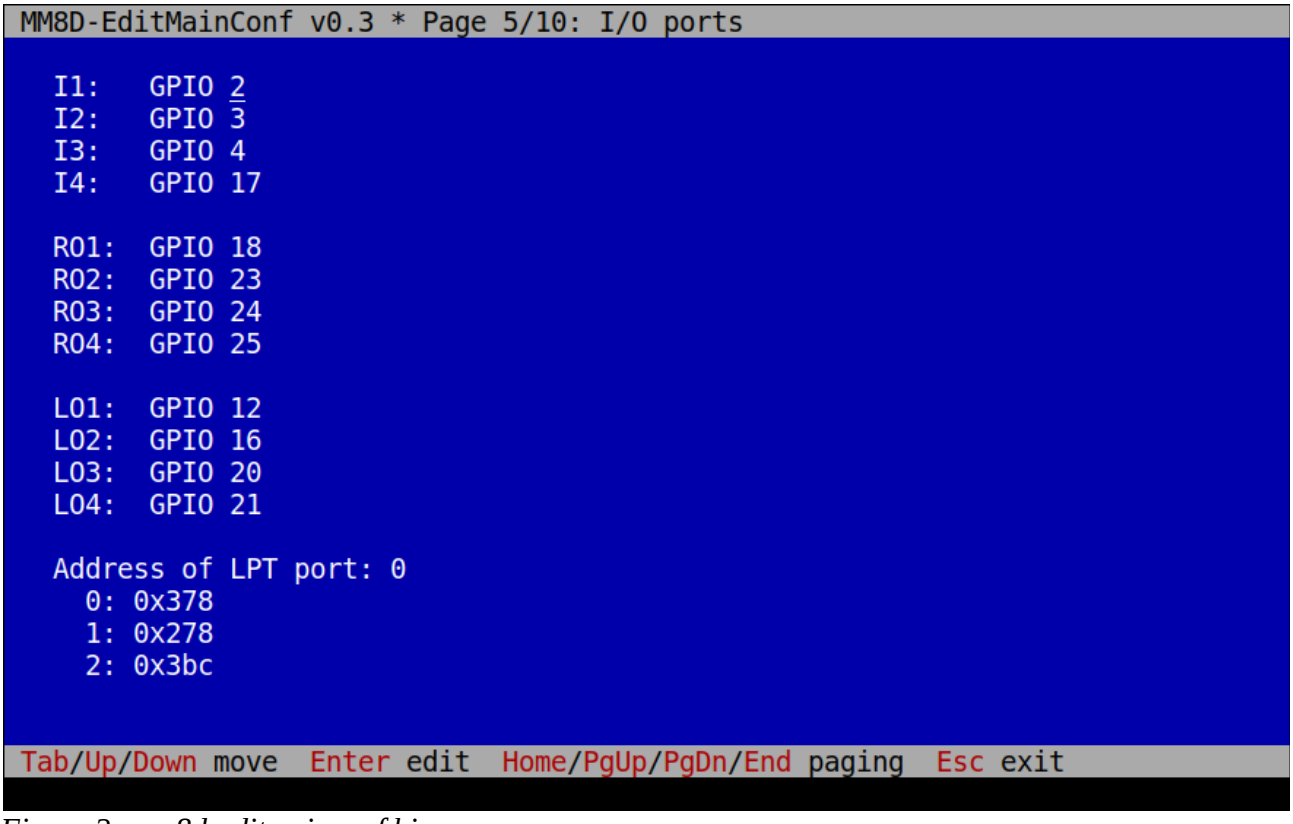

Figure 2: mm8d-editmainconf.bin

```
MM8D-EditEnvirConf 0.3 * Page 4/11: Growing hyphae - ventilating 1

  Ventilators switch-on minute:            15
  Ventilators switch-off minute:           30


  Disable ventilators (0/1):          Disable if ext. temp. is low (0/1):
   0.00...0.59 1    12.00..12.59 1     0.00...0.59 1    12.00..12.59 1
   1.00...1.59 1    13.00..13.59 1     1.00...1.59 1    13.00..13.59 1
   2.00...2.59 1    14.00..14.59 1     2.00...2.59 1    14.00..14.59 1
   3.00...3.59 1    15.00..15.59 1     3.00...3.59 1    15.00..15.59 1
   4.00...4.59 1    16.00..16.59 1     4.00...4.59 1    16.00..16.59 1
   5.00...5.59 1    17.00..17.59 1     5.00...5.59 1    17.00..17.59 1
   6.00...6.59 1    18.00..18.59 1     6.00...6.59 1    18.00..18.59 1
   7.00...7.59 1    19.00..19.59 1     7.00...7.59 1    19.00..19.59 1
   8.00...8.59 1    20.00..20.59 1     8.00...8.59 1    20.00..20.59 1
   9.00...9.59 1    21.00..21.59 1     9.00...9.59 1    21.00..21.59 1
  10.00..10.59 1    22.00..22.59 1    10.00..10.59 1    22.00..22.59 1
  11.00..11.59 1    23.00..23.59 1    11.00..11.59 1    23.00..23.59 1

  Low external temperature:                15 °C


 Enter accept  Esc cancel
>22
```

Figure 3: mm8d-editenvirconf.bin

```
MM8D-EditIrrConf 0.3 * Page 2/2: Irrigator tubes

  name of tube #1 :                  Tomato and eggplant
  start of morning irrigation:       05:00
  end of morning irrigation:         05:30
  start of evening irrigation:       19:00
  end of evening irrigation:         19:30


  name of tube #2 :                  Pumpkin #1
  start of morning irrigation:       05:30
  end of morning irrigation:         06:00
  start of evening irrigation:       19:30
  end of evening irrigation:         20:00


  name of tube #3 :                  Pumpkin #2
  start of morning irrigation:       06:00
  end of morning irrigation:         06:30
  start of evening irrigation:       20:00
  end of evening irrigation:         20:30


 Tab/Up/Down move  Enter edit  Home/PgUp/PgDn/End paging  Esc exit
```

Figure 4: mm8d-editirrconf.bin

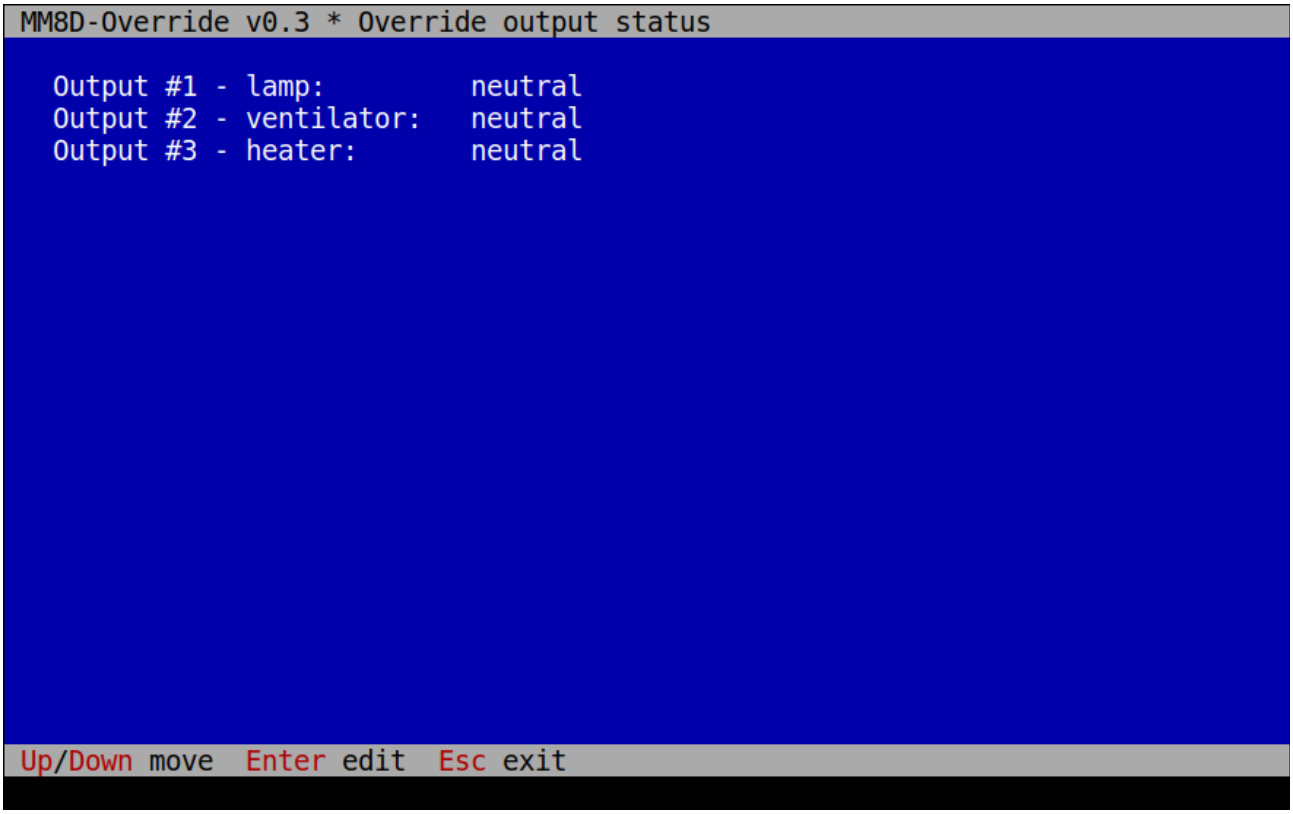

Figure 5: mm8d-override.bin

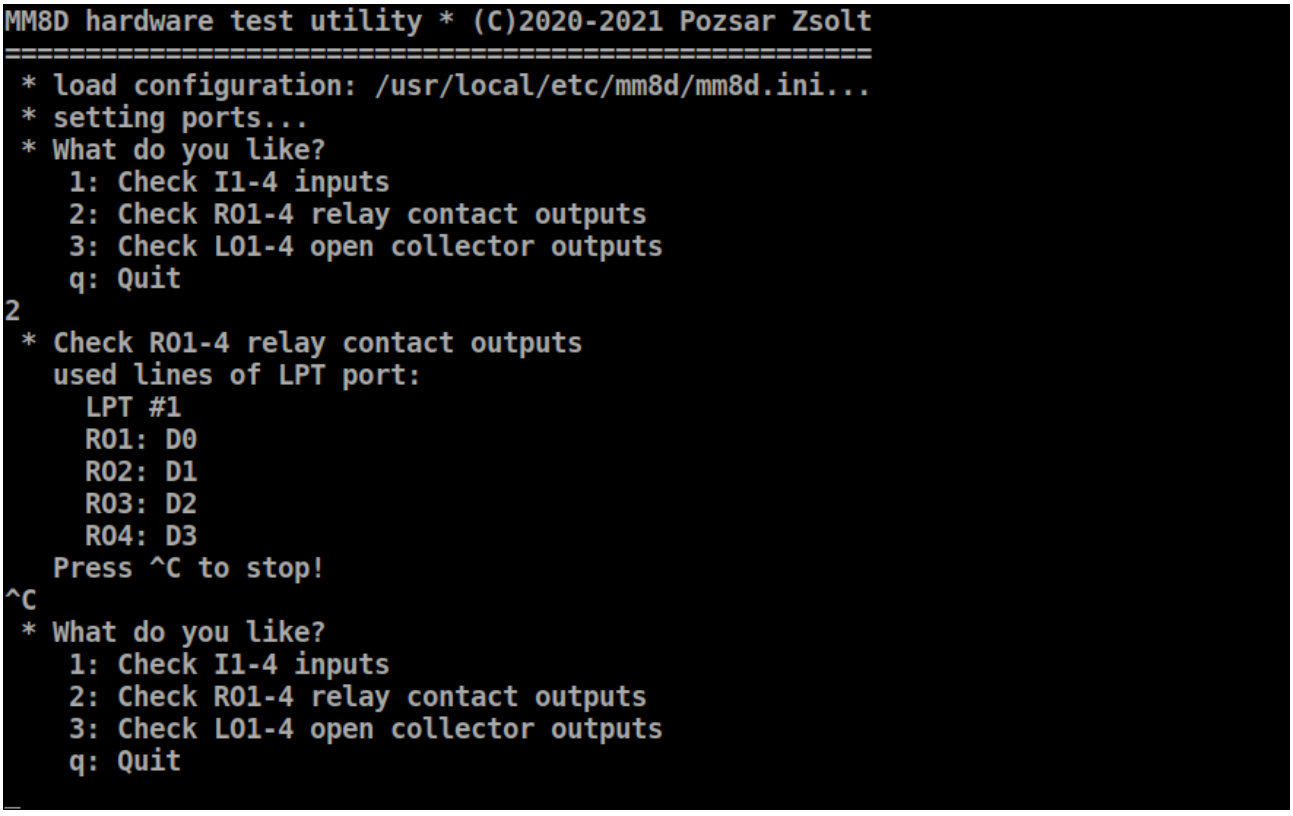

Figure 6: mm8d-hwtest.py

10. Downloadable software package

The software package in .tar.gz format compressed file can be downloaded from the manufacturer's website or Github. (Refer to Chapter III for references.)

Name of package are:*mm8d-sw-0.3-amd64.tar.gz, mm8d-sw-0.3-armhf.tar.gz* and *mm8d-sw-0.3-i386.tar.gz.*

Content of package - only important files:

```
mm8d-sw
│
├──binary                  binary files
├──documents               documentation (EN)
│     AUTHORS                  author(s)
│     INSTALL.pc               installation instruction
│     INSTALL.raspi            installation instruction
│     README                   information
│     VERSION                  version number
│     cgiprogs.txt             about CGI programs
│     changelog                log of changes
│     connecting.txt           about connecting device
│     copyright                copyright information
│     exitcodes.txt            about exit codes
│     logfiles.txt             about logfiles
├──manuals                 manual pages (EN)
├──messages                translated webpage text
├──packaging               files for make deb packages
├──programs                main programs (Python)
├──scripts                 utility programs (Bash)
├──settings                configuration files
├──source                  source code
├──webpage                 static components of webpage
├──install                 installer script
├──prepare                 system preparer script
├──uninstall               uninstaller script
├──LICENCE                 terms of use (EN)
└──README.md               short description (EN)
```

III. Related links

1. Hardware

Full package	http://www.szerafingomba.hu/equipments/mm8d/mm8d-hw-210326-2.0.tar.gz
Download from Github	https://github.com/pozsarzs/mm8d-hw.git
Technical manual	http://www.szerafingomba.hu/equipments/mm8d/technical-manual-210326-0.3-2.0-en.pdf

Schematic and PCB drawings (PDF):

Schematics	http://www.szerafingomba.hu/equipments/mm8d/sch_mm8d.pdf
PCB solder side	http://www.szerafingomba.hu/equipments/mm8d/pcb_mm8d-sold.pdf
PCB component side	http://www.szerafingomba.hu/equipments/mm8d/pcb_mm8d-comp.pdf
PCB silkscreen	http://www.szerafingomba.hu/equipments/mm8d/pcb_mm8d-silk.pdf

2. Software

for Raspberry Pi	http://www.szerafingomba.hu/softwares/mm8d/mm8d-sw-0.3-armhf.tar.gz
for AMD64 PC	http://www.szerafingomba.hu/softwares/mm8d/mm8d-sw-0.3-amd64.tar.gz
for i586 PC	http://www.szerafingomba.hu/softwares/mm8d/mm8d-sw-0.3-i586.tar.gz
Download from Github	https://github.com/pozsarzs/mm8d-sw.git

3. Terms of use

CC-BY-NC-4.0	https://creativecommons.org/licenses/by-nc/4.0/legalcode
CC-BY-NC-4.0	https://creativecommons.org/licenses/by-nc/4.0/
EUPL v1.2	https://eupl.eu/1.2/en/
GNU GPL v3.0	https://www.gnu.org/licenses/gpl-3.0.html

4. Developer and manufacturer

Homepage	http://www.szerafingomba.hu
E-mail	info@szerafingomba.hu

IV. Annexes

Content

1. Schematic of printed circuit board
2. PCB solder side
3. PCB component side
4. PCB silkscren

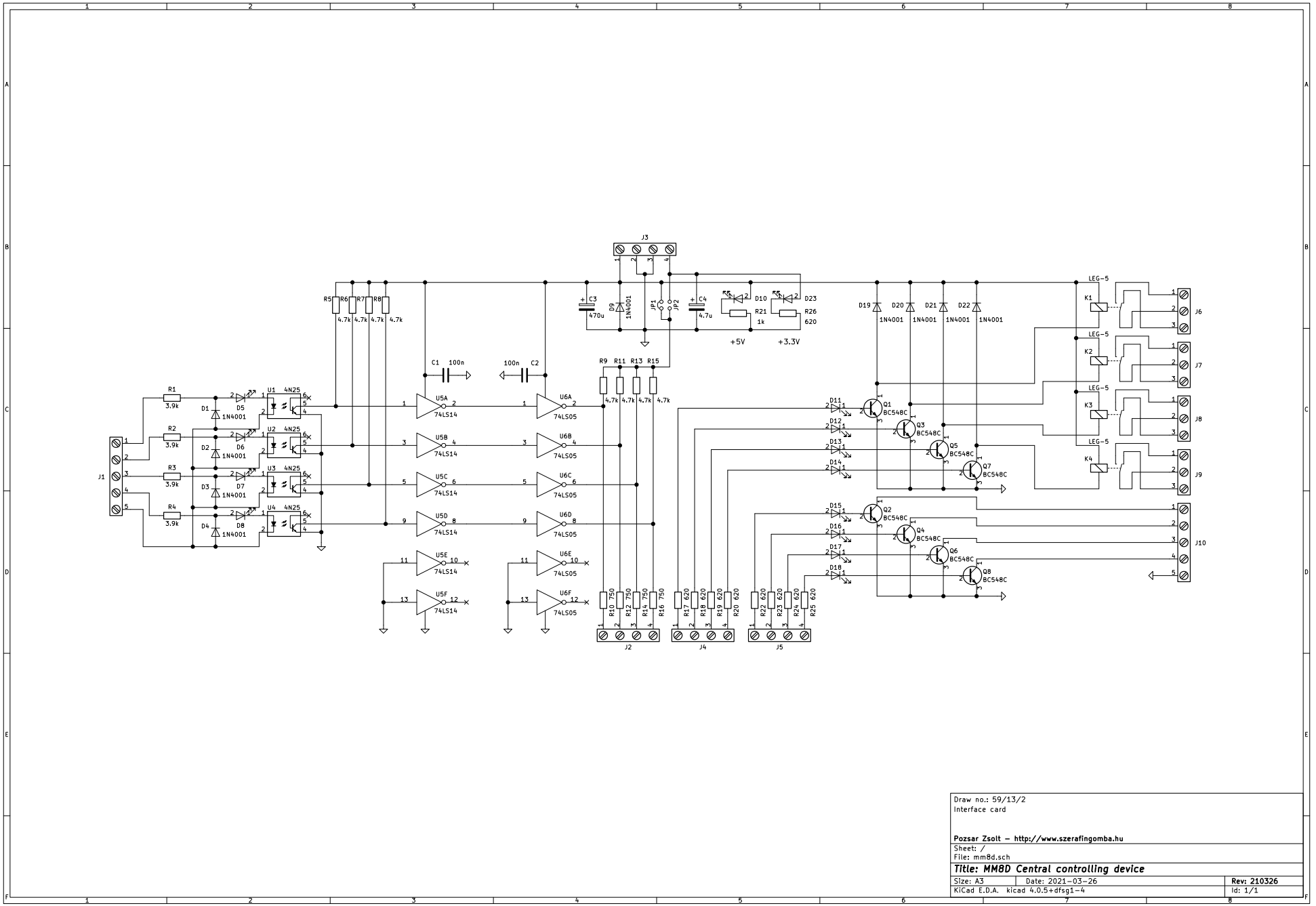

Annex 1: Schematic of printed circuit board

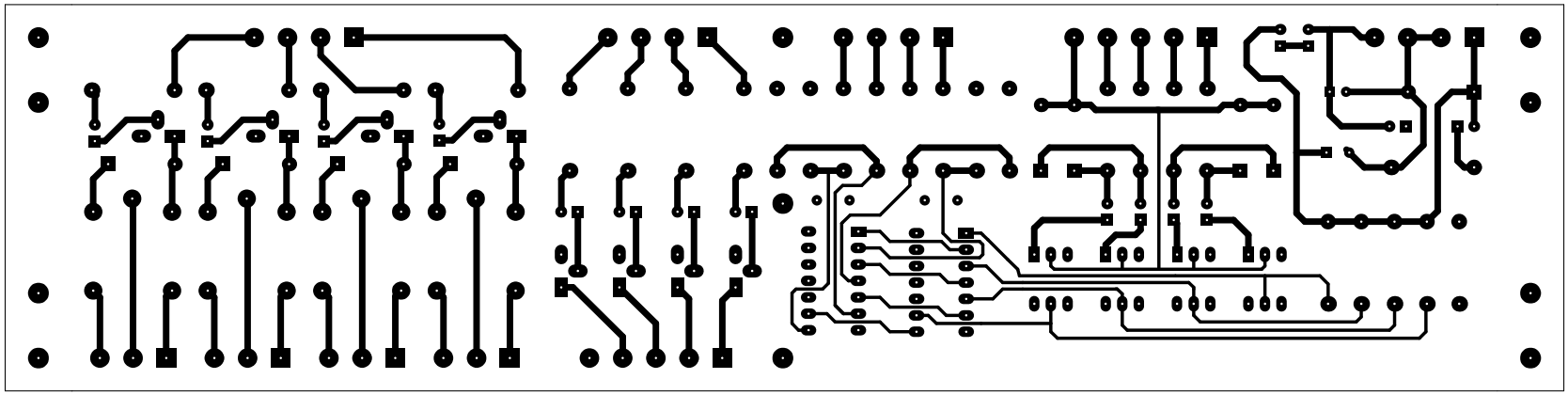

Draw no.: 59/13/3
Interface card

Pozsar Zsolt – http://www.szerafingomba.hu

Sheet:
File: mm8d.kicad_pcb

Title: MM8D Central controlling device

Size: A4	Date: 2021-03-26	**Rev: 210326**
KiCad E.D.A. kicad 4.0.5+dfsg1-4		Id: 1/1

Annex 2: PCB solder side

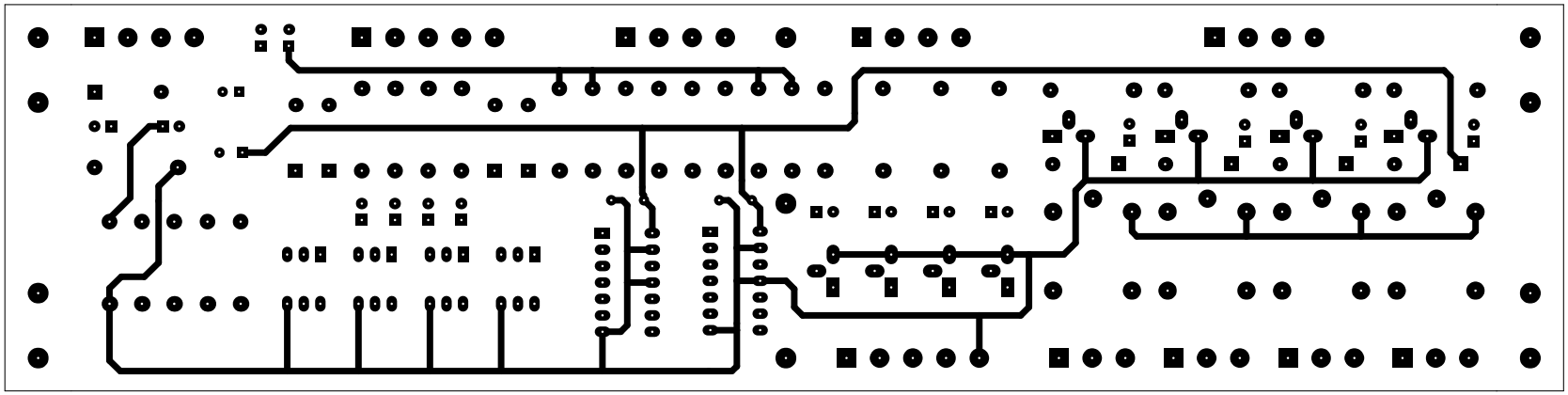

Draw no.: 59/13/3
Interface card

Pozsar Zsolt – http://www.szerafingomba.hu

Sheet:
File: mm8d.kicad_pcb

Title: MM8D Central controlling device

Size: A4	Date: 2021-03-26	**Rev: 210326**
KiCad E.D.A. kicad 4.0.5+dfsg1-4		Id: 1/1

Annex 3: PCB component side

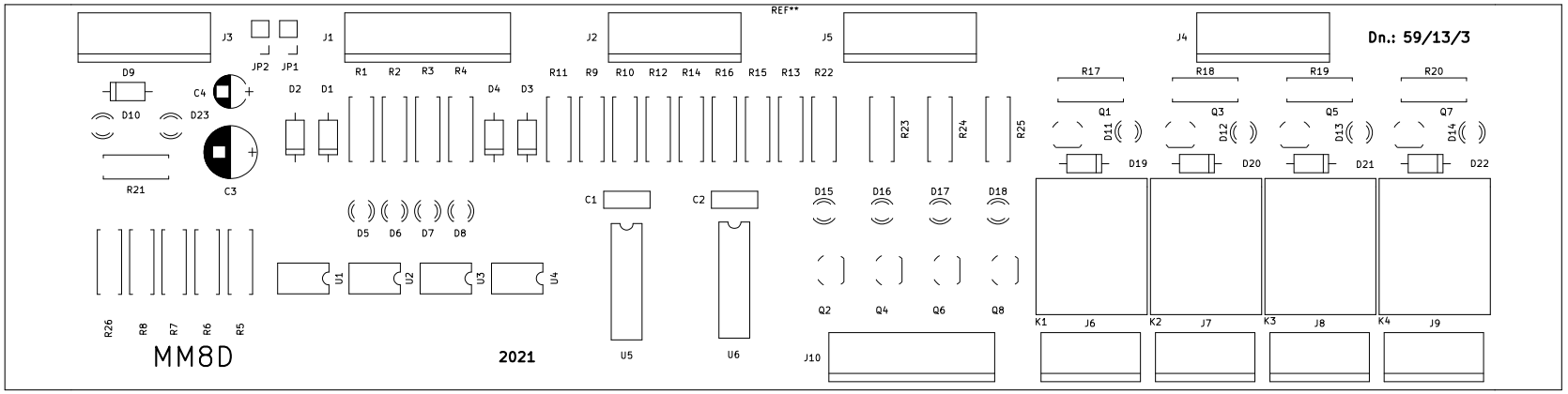

Draw no.: 59/13/3 Interface card		
Pozsar Zsolt – http://www.szerafingomba.hu		
Sheet: File: mm8d.kicad_pcb		
Title: MM8D Central controlling device		
Size: A4	Date: 2021-03-26	**Rev: 210326**
KiCad E.D.A. kicad 4.0.5+dfsg1-4		Id: 1/1

Annex 4: PCB silkscreen