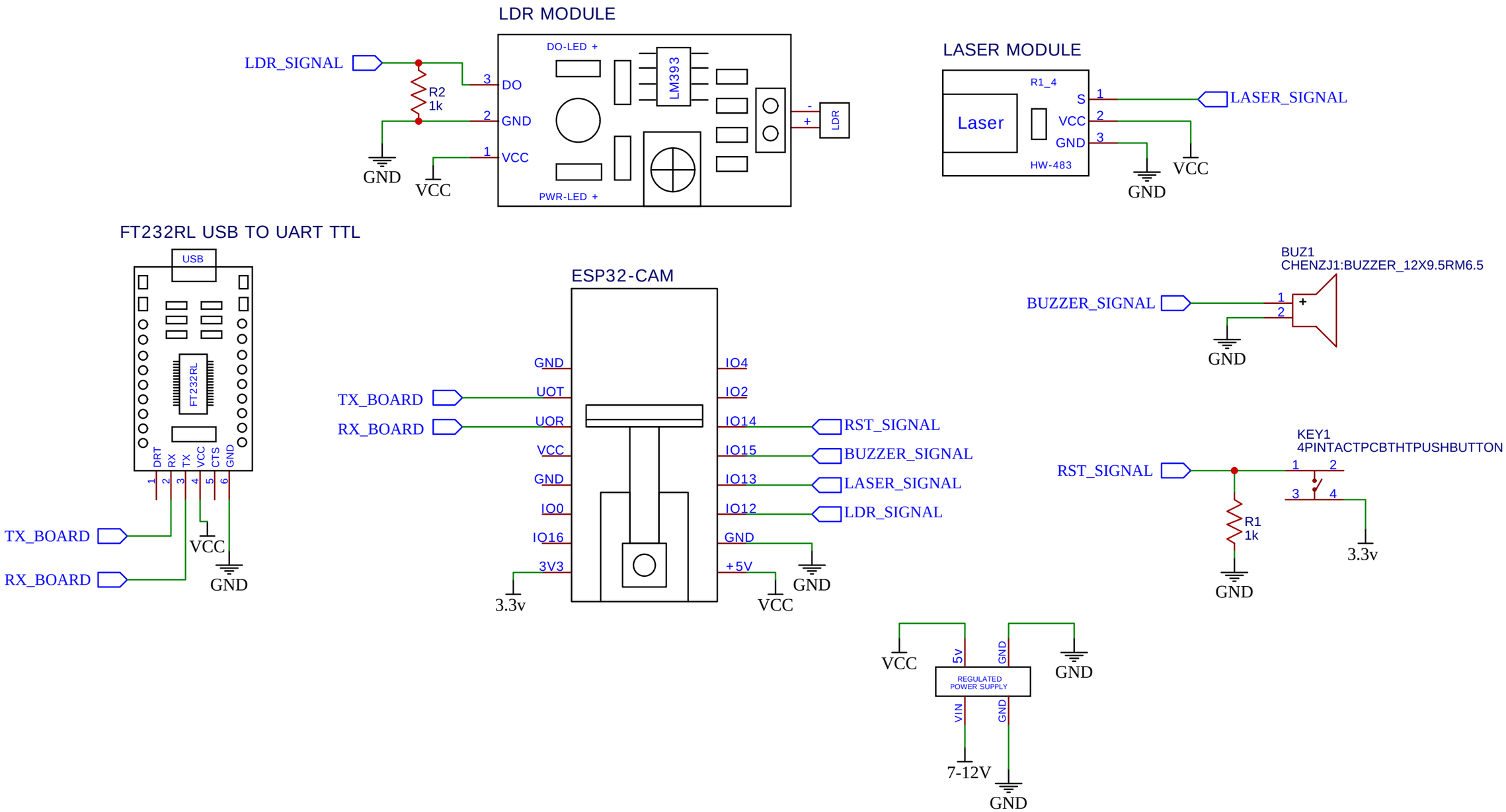

TITLE: LASER HOME SECURITY SYSTEM		REV: 1.0
EasyEDA	Company: TEAM AWESOME	Sheet: 1/1
	Date: 22-05-2022 Drawn By: pritam20ps05	