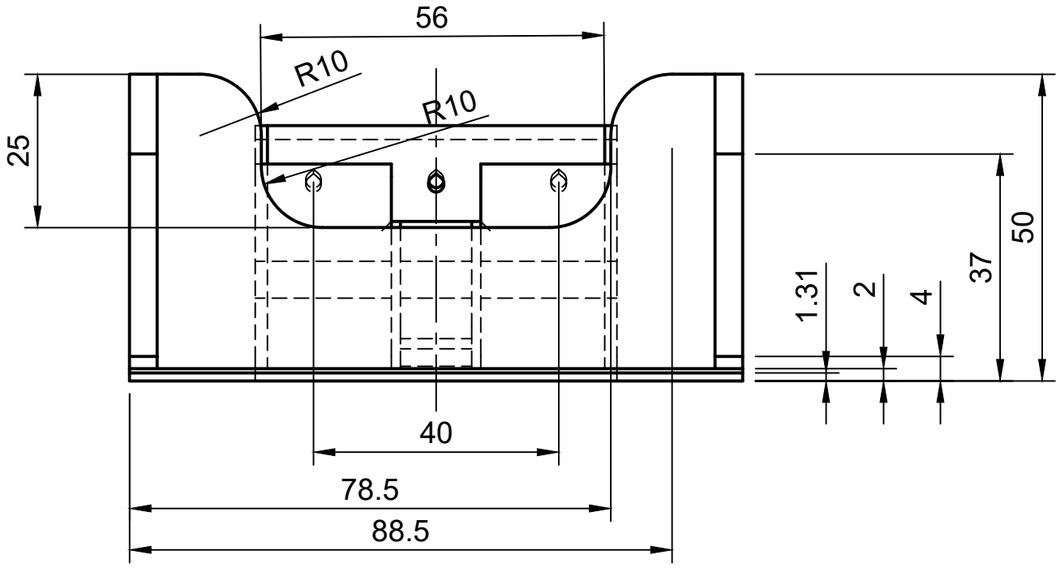

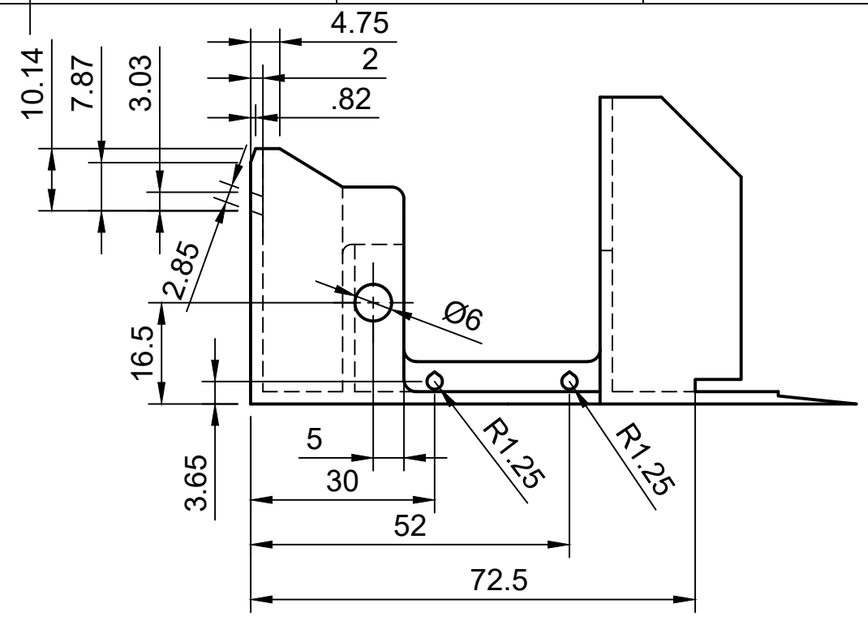

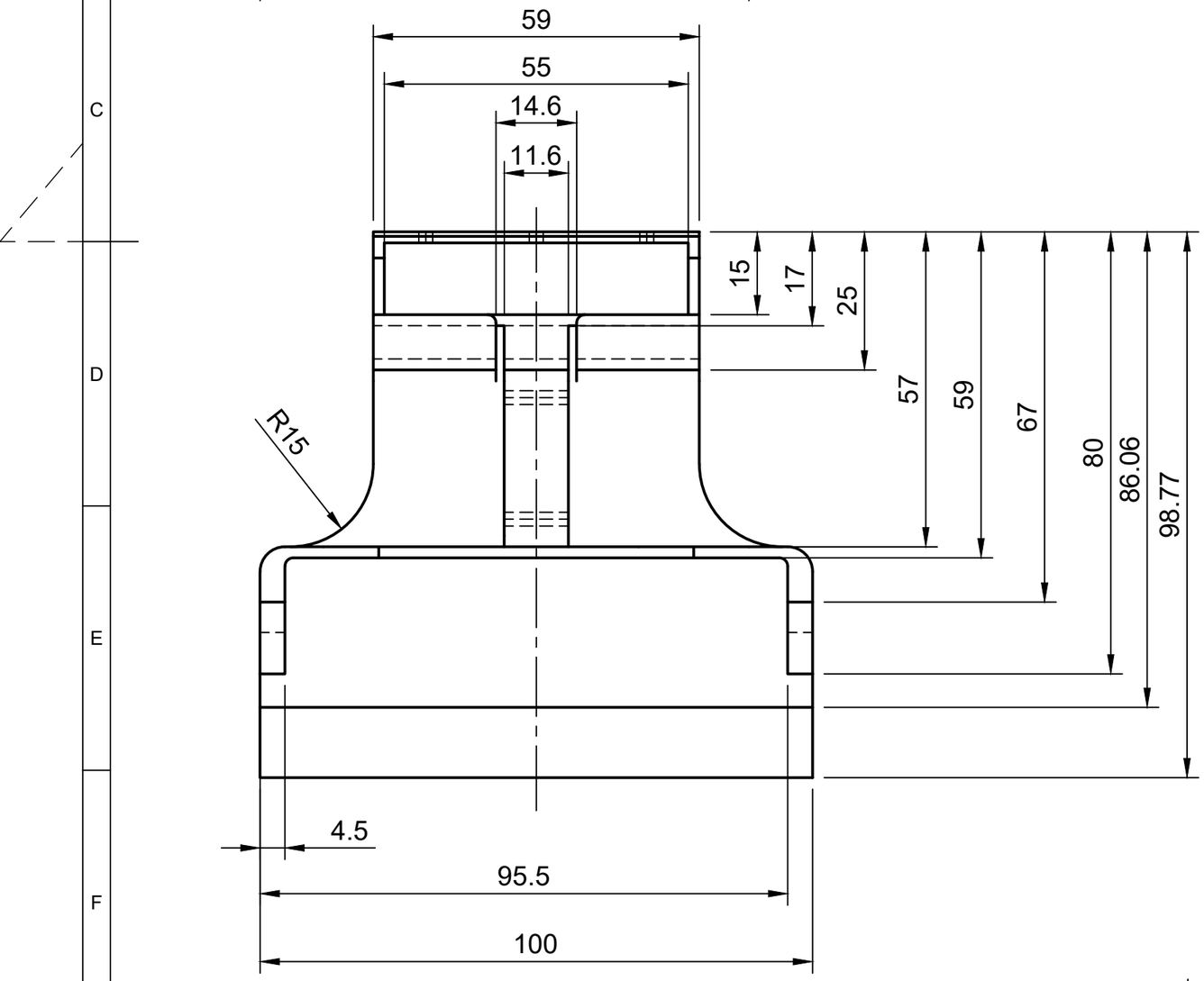

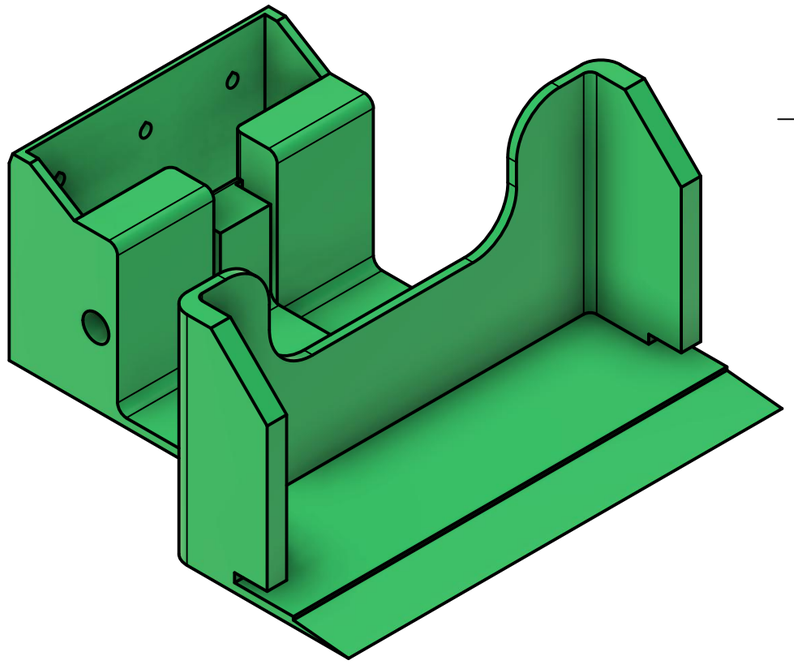

logo_1.png	Organization: Project NEON		Project Name: Sumo Esguicho	Status: Accepted_29.10.2022	
	Designer: Amanda Sampaio		Title: Esguicho_Main_Body		
	Approved by: Amanda Sampaio				
logo (2)_1.png	Created in: 29/10/2022	Scale: 1:1	Dwg. Number: Sumo_Esguicho_DW.01.00	Sheet: 1/1	Rev.: 00

A3