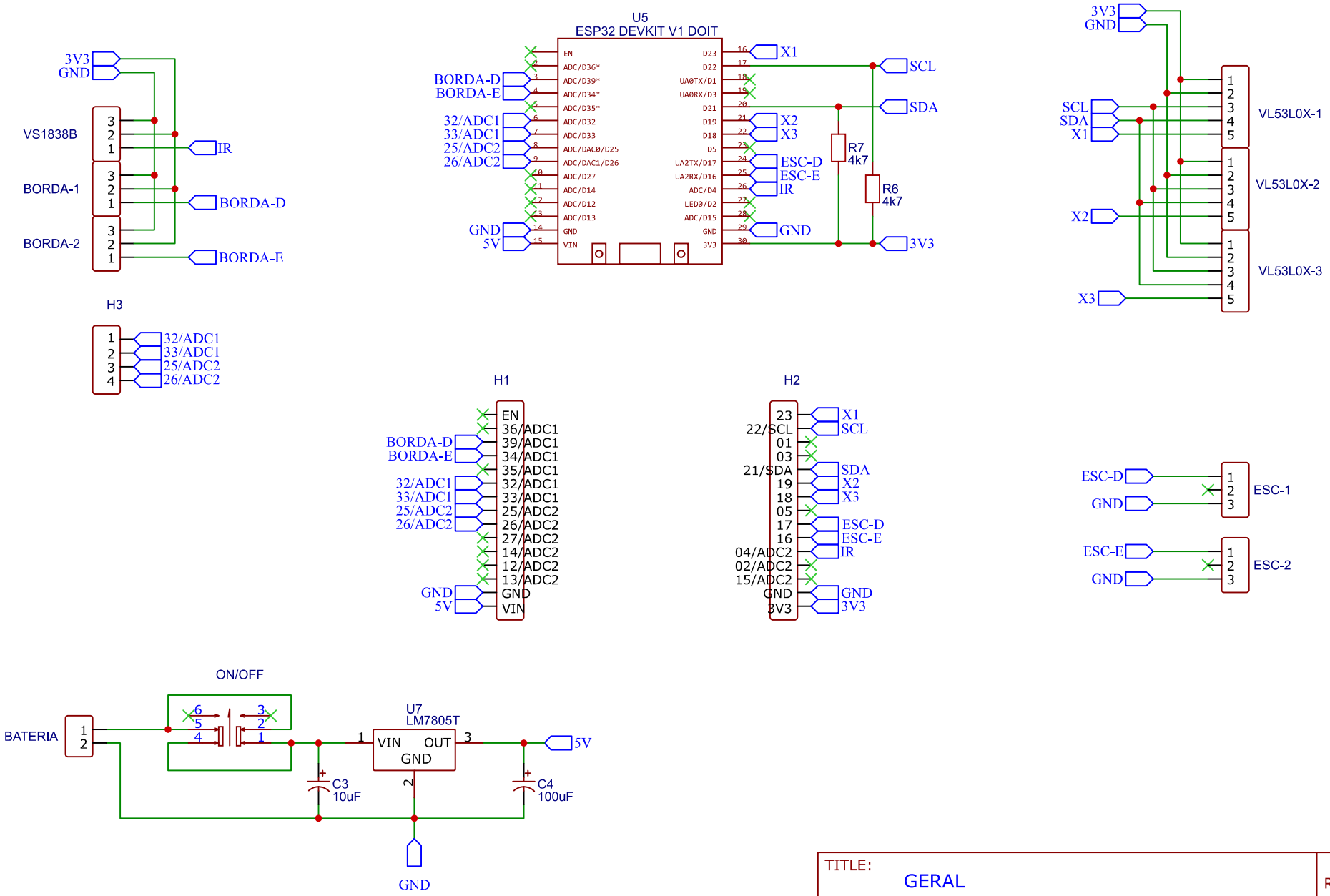

TITLE: GERAL		REV: 1.0
	Company: Neon	Sheet: 1/1
	Date: 2022-08-26 Drawn By: Foguete	