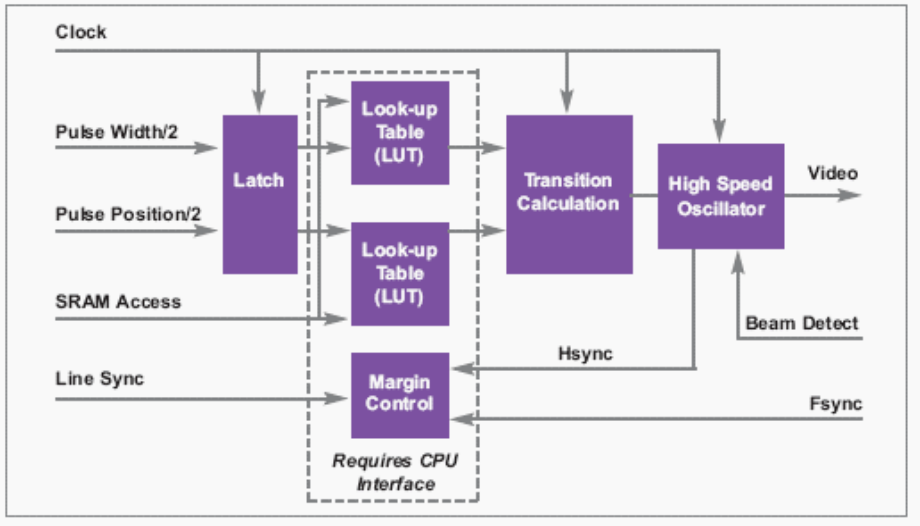
Clock
Pulse Width/2
Pulse Position/2
SRAM Access
Line Sync
Latch
Look-up Table (LUT)
Look-up Table (LUT)
Margin Control
Requires CPU Interface
Transition Calculation
High Speed Oscillator
Video
Beam Detect
Hsync
Fsync

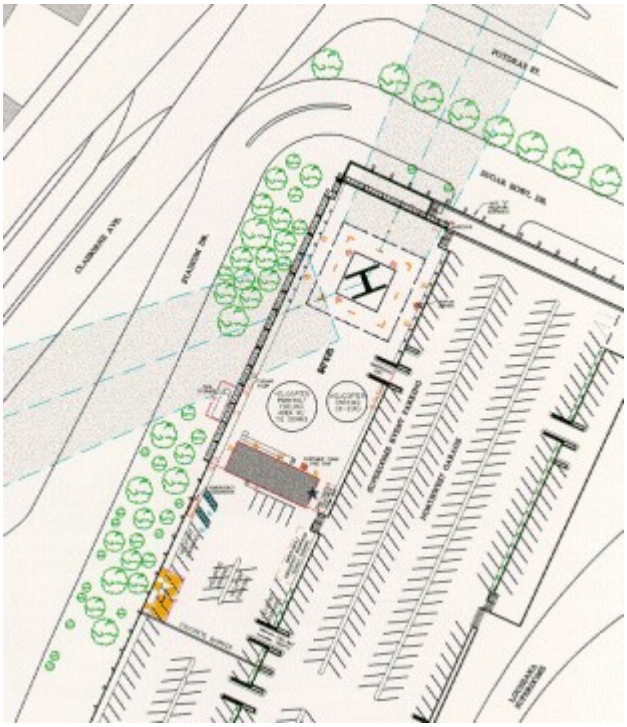

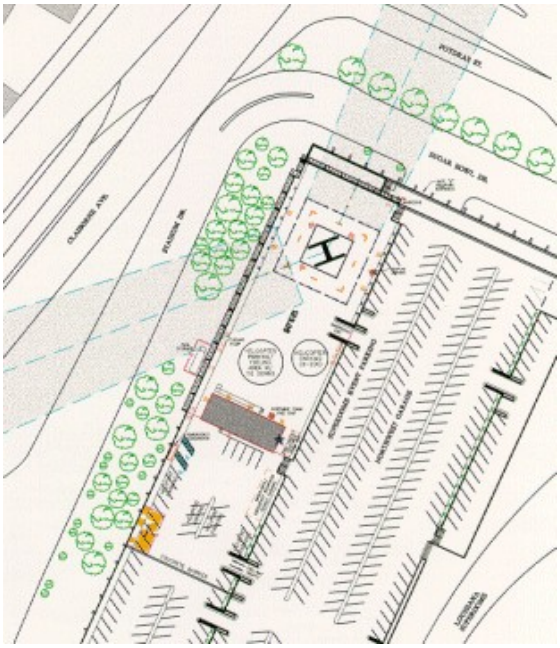
CLARENDON AVE.
AVENUE DR.
RIVER
RICHMOND STREET STADIUM
UNIVERSITY STADIUM
LONDON
HYDRO
PUTNAM ST.
BRUCE HOWE DR.